SKYJACK

SERVICE MANUAL

SJ3220 E, SJ3226 E, SJ3232 E, SJ4726 E, SJ4726 E², SJ4732 E, SJ4740 E

DC ELECTRIC SCISSORS

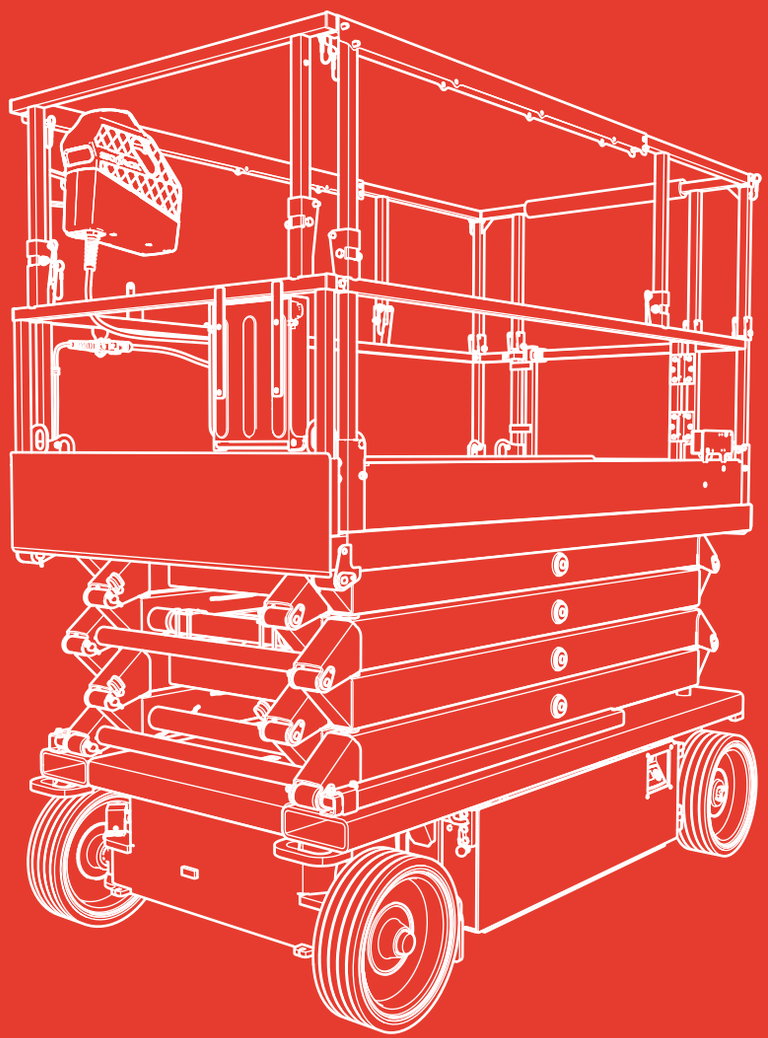

248004AFA
October 05 2026
ANSI/CSA, CE, AS, KC

This manual is for MEWPs with serial numbers:

SJ3220 E: A101 019 000 - A101 999 999
SJ3220 E: C101 000 001 - C101 999 999
SJ3226 E: A101 019 000 - A101 999 999
SJ3226 E: C101 000 001 - C101 999 999
SJ3232 E: A101 019 000 - A101 999 999
SJ4726 E: A102 014 000 - A102 999 999
SJ4726 E: C102 000 001 - C102 999 999
SJ4726 E2: C102 000 001 - C102 999 999
SJ4732 E: A102 014 000 - A102 999 999
SJ4732 E: C102 000 001 - C102 999 999
SJ4740 E: A103 007 000 - A103 999 999
SJ4740 E: C103 000 001 - C103 999 999

Please refer to the website (www.skyjack.com) for contact information, other serial numbers, the most recent technical manuals, animations, and USB software.

The original instructions are in English.

THIS SAFETY ALERT SYMBOL MEANS ATTENTION!



BECOME ALERT! YOUR SAFETY IS INVOLVED.

The Safety Alert Symbol identifies important safety messages on MEWPs, safety signs in manuals or elsewhere. When you see this symbol, be alert to the possibility of personal injury or death. Follow the instructions in the safety message.

⚠ DANGER

DANGER indicates an imminently hazardous situation which, if not avoided, will result in death or serious injury.

⚠ WARNING

WARNING indicates a potentially hazardous situation which, if not avoided, could result in death or serious injury.

⚠ CAUTION

CAUTION indicates a potentially hazardous situation which, if not avoided, may result in minor or moderate injury. It may also be used to alert against unsafe practices.

IMPORTANT

IMPORTANT indicates a procedure essential for safe operation and which, if not followed, may result in a malfunction or damage to the MEWP.

Notes

Table of Contents

Section 1 – Maintenance 11

1.1 Read and Heed 11

1.1-1 Mobile Elevating Work Platform (MEWP) definition 11

1.1-2 Purpose of equipment 11

1.1-3 Use of equipment 11

1.1-4 Service Policy and Warranty 11

1.1-5 Ownership of MEWP 11

1.1-6 Optional equipment 11

1.2 General information 12

1.2-1 Owner's annual inspection record 12

1.2-2 Replacement parts 12

1.2-3 Maintenance and service safety tips 12

1.2-4 Hydraulic system & component maintenance and repair 13

1.2-5 Hydraulic oil maintenance 13

1.2-6 Hydraulic maintenance tips 13

1.2-7 Railing maintenance and repair 14

1.2-8 Multi-conduction control cable repair 14

1.3 Scheduled maintenance and inspections 14

1.3-1 Service bulletins 14

1.3-2 Maintenance and inspections 14

1.3-3 Schedule and instructions 15

1.3-4 Repairs 15

1.3-5 Frequent/periodic/annual/pre-delivery inspection checklist 16

1.3-6 Inspection points 17

1.3-7 Function tests 28

Section 2 – Specifications 29

2.1 Standard hose numbering system 29

2.2 Torque specifications for fasteners (metric) 31

2.3 Torque specifications for fasteners (US) 32

2.4 Torque specifications for hydraulic couplings & hoses 33

2.5 Torque specifications for cartridges and coils 33

2.6 MEWP torque specifications 34

2.7 Valve coil resistance 34

2.8 Platform capacities 35

2.9 Specifications & features - SJ3220 E with Rollout Deck 36

2.10 Specifications & features - SJ3220 E with Powerdeck 38

2.11 Specifications & features - SJ3226 E 40

2.12 Specifications & features - SJ3232 E 42
2.13 Specifications & features - SJ4726 E 44
2.14 Specifications & features - SJ4726 E² 46
2.15 Specifications & features - SJ4732 E 48
2.16 Specifications & features - SJ4740 E 50

Section 3 – Component Identification and Schematics 53
3.1 Electrical symbol chart 54
3.2 Hydraulic symbol chart 55
3.3 Wire number and colour code 56
3.4 Hydraulic parts list 57
3.5 Electrical parts list 58
3.6 Platform to base control cable 60
3.7 Base controls harness 61
3.8 Brake release/E-lowering module 62
3.9 Beeper 62
3.10 Holding valve harness 63
3.11 Pressure transducer harness 63
3.12 Drive motor harnesses 64
3.13 E-drive harness - KC 64
3.14 Anti-overrising jumper harness - KC 64
3.16 Pothole protection limit switches 65
3.15 Battery management system (BMS) harness 65
3.17 I/O expander harness 66
3.18 Powerdeck control box harness 66
3.19 Powerdeck valve harness 67
3.20 Powerdeck control box wiring 67
3.21 Zapi controller wiring connections - SJ3220 E, SJ3226 E, SJ3232 E, SJ4726 E, SJ4732 E 68
3.22 Zapi controller wiring connections - SJ4740 E 69
3.23 Battery wiring connections - SJ3220 E, SJ3226 E, SJ3232 E, SJ4726 E, SJ4732 E 70
3.24 Battery wiring connections - SJ4740 E 71
3.25 Main manifold 72
3.26 Powerdeck sandwich manifold 73
3.27 Lift cylinder manifold 73
3.28 Hydraulic hose connections - SJ3220 E 74
3.29 Hydraulic hose connections - SJ3226 E, SJ3232E, SJ4726 E, SJ4732 E, SJ4740 75
3.30 Major Components 77
3.31 Hydraulic Schematic - SJ3220 E, SJ3226 E & SJ3232 E ANSI/CSA 78
3.32 Hydraulic Schematic - SJ3220 E, SJ3226 E & SJ3232 E CE 79
3.33 Hydraulic Schematic - SJ3220 E & SJ3226 E AS & KC 80
3.34 Hydraulic Schematic - SJ4726 E, SJ4732 E ANSI/CSA 81
3.35 Hydraulic Schematic - SJ4726 E, SJ4732 E CE 82
3.36 Hydraulic Schematic - SJ4726 E, SJ4732 E AS, KC 83

3.37 Hydraulic Schematic - SJ4740 E ANSI/CSA, AS, KC 84
3.38 Hydraulic Schematic - SJ4740 E CE 85
3.39 Electrical Schematic - ANSI/CSA - All Options 87
3.40 Electrical Schematic - ANSI/CSA - No Options 88
3.41 Electrical Schematic - ANSI/CSA - EE Rated 89
3.42 Electrical Schematic - CE, AS & KC - All Options 90
3.43 Electrical Schematic - CE, AS & KC - No Options 91
3.44 Platform Control Box Harness - ANSI/CSA, CE, AS 92
3.45 Platform Control Box Harness - KC 94
3.46 Main Harness Pinout - SJ3220 E, SJ3226 E, SJ3232 E, SJ4726 E, SJ4732 E 95
3.47 Main Harness Schematic - SJ3220 E, SJ3226 E, SJ3232 E, SJ4726 E, SJ4732 E 96
3.48 Main Harness Pinout - SJ4740 E 97
3.49 Main Harness Schematic - SJ4740 E 98

Section 4 – Troubleshooting Information 99
4.1 Introduction 99
4.2 Electrical System 100
4.2-1 All controls inoperative 100
4.2-2 No lift or steer functions 101
4.2-3 No lift from base or platform 102
4.2-4 No lift from base controls 102
4.2-5 No lower from base or platform 102
4.2-6 No lower from base controls 103
4.2-7 No functions from platform controls 103
4.2-8 No lift/lower from platforms controls 103
4.2-9 No steer left 103
4.2-10 No steer right 103
4.2-11 No drive 104
4.3 Hydraulic System 105
4.3-1 All hydraulic controls inoperative (no lift or steer functions) 105
4.3-2 No lift function 105
4.3-3 No lower function 105
4.3-4 No steer left and/or right 105

Section 5 – Procedures 107
5.1 Safety and workmanship 107
5.2 Platform 108
5.2-1 Joystick 32-pin connector chart 108
5.2-2 Gate spring hinge adjustment 109
5.2-3 Platform mounting hardware 109
5.3 Hydraulic Tray 110
5.3-1 Tightening and torque recommendations for hydraulic couplings and hoses 110
5.3-2 System relief (RV1) adjustment 112

5.4 Base . . . 113
5.4-1 Replace the pothole compression rod . . . 113
5.4-2 Replace and adjust the pothole limit switches (LS1 & LS2) . . . 114
5.4-3 Pothole bar replacement/removal for servicing . . . 116
5.4-4 Replace the steer sensor . . . 117
5.4-5 Replace the rotary sensor . . . 120
5.4-6 Set up a new external tilt switch . . . 122
5.4-7 Reprogram an existing external tilt switch . . . 123
5.4-8 External tilt switch operation . . . 124
5.5 Wheels . . . 125
5.5-1 Remove the front wheel . . . 125
5.5-2 Install the front wheel . . . 125
5.5-3 Remove the rear wheel . . . 127
5.5-4 Install the rear wheel . . . 128
5.5-5 Do a test of the wheel motor . . . 129
5.5-6 Do a test of the wheel motor temperature sensor . . . 130
5.6 Batteries . . . 131
5.6-1 Battery servicing . . . 131
5.7 Battery Charger . . . 131
5.7-1 Charger operation . . . 131
5.7-2 Charger maintenance . . . 131
5.7-3 Charger profiles . . . 132
5.7-4 Charger connector . . . 133
5.7-5 Charger troubleshooting . . . 133
5.7-6 Charger fault codes . . . 133
5.7-7 Charger error codes . . . 134
5.8 Skycoded control module . . . 138
5.8-1 Calibration and diagnostic tool key functions . . . 138
5.8-2 Skycoded display controls . . . 138
5.8-3 Main menu overview . . . 138
5.8-4 Main menu and language selection menu . . . 139
5.8-5 Machine info menu . . . 140
5.8-6 Tester main menu . . . 141
5.8-7 Tester main menu table A . . . 142
5.8-8 Tester main menu table B . . . 143
5.8-9 Tester main menu table C . . . 144
5.8-10 Tester sec menu . . . 145
5.8-11 Tester sec menu table A . . . 146
5.8-12 Tester sec menu table B . . . 147
5.8-13 Tester sec menu table C . . . 148
5.8-14 Parameter menu . . . 149
5.8-15 Parameter menu table . . . 150
5.8-16 Machine setup menu . . . 151

5.8-17 Machine setup menu table 152
5.8-18 Logged alarms M/S menu. 153
5.8-19 Store data menu 154
5.8-20 Calibration menu. 155
5.8-21 Load sense calibration - loaded menu 156
5.8-22 Load sense calibration - empty menu 157
5.8-23 Calibrate internal tilt sensor menu 158
5.8-24 Calibrate steer sensor menu. 159
5.8-25 Skycoded error codes and troubleshooting. 160
5.8-26 Set up a new Skycoded controller 169
5.9 ZAPI controller. 170
5.9-1 ZAPI controller pin chart 170
5.9-2 Flash the controller software. 173

Notes

Section 1 – Maintenance

1.1 Read and Heed

Skyjack is continuously improving and expanding product features on its equipment; therefore, specifications and dimensions are subject to change without notice.

1.1-1 Mobile Elevating Work Platform (MEWP) definition

A MEWP is a mobile machine intended for moving persons, tools, and material to working positions. It consists of a work platform with controls, an extending structure, and a chassis.

1.1-2 Purpose of equipment

The Skyjack DC Electric Scissor lifts are designed to move personnel, tools, and materials to working positions.

1.1-3 Use of equipment

The MEWP is a highly maneuverable, mobile work station. Only elevate the platform, or drive while elevated on a firm, level surface.

1.1-4 Service Policy and Warranty

Skyjack warrants each new product to be free of defective parts and workmanship for the first 2 years or 3000 hours, whichever occurs first. Your local Skyjack dealer will replace or repair any defective part, with no charge for parts or labour. In addition, all products have a 5-year structural warranty. Contact the Skyjack service department for warranty statement extensions or exclusions.

1.1-5 Ownership of MEWP

Notify Skyjack of MEWP ownership. If you sell or transfer the ownership of a MEWP, promptly notify Skyjack of the new owner's contact information.

Skyjack needs this information to inform the owner of any updates or additional activities that are necessary to keep the machine in proper working condition.

1.1-6 Optional equipment

This MEWP accepts a variety of optional equipment. Refer to the operation manual for a list of the optional accessories. Operating instructions for these options are in the operation manual.

For components or systems that are not standard, speak to the Skyjack service department. Give the model and serial number for each applicable MEWP.

1.2 General information

1.2-1 Owner's annual inspection record

The owner is responsible for the maintenance inspections and repairs. Keep a record of the annual inspection on the label on the scissor stack.

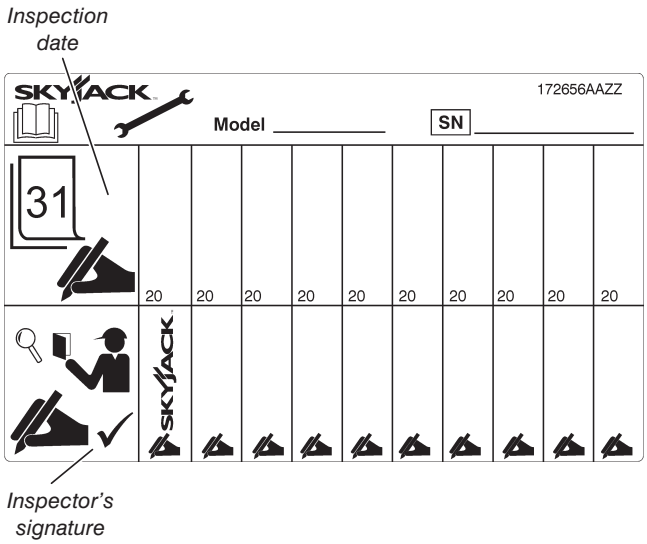

1.2-2 Replacement parts

Use only original replacement parts. Parts such as batteries, wheels, railings, etc. With weights and dimensions different from the original parts will affect the stability of the MEWP. They must not be used without the manufacturer's consent.

All replacement tires must be of the same size and load rating as the originally supplied tires to maintain the safety and stability of the MEWP.

⚠ WARNING

A unit that is damaged or not operating correctly must be immediately tagged and removed from service until repairs are completed.

1.2-3 Maintenance and service safety tips

1. Maintenance and repair should only be done by personnel who are trained and qualified to service this MEWP.
2. Do the maintenance and service procedures in a well-lit and well-ventilated area.
3. Anyone operating or servicing this MEWP must read and fully understand all operating instructions and safety hazards in both this manual and the operation manual.
4. Make sure all tools, supports, and lifting equipment are of the correct rated load and in good working condition.
5. Keep the work area clean and free of debris to avoid component contamination.
6. Make sure personnel are not below unsupported components or systems that are at risk of movement during maintenance.
7. All service personnel must be familiar with the employer and governmental regulations for servicing this type of equipment.
8. Keep sparks and flames away from flammable or combustible materials.
9. Correctly dispose of waste material such as lubricants, rags, and old parts in accordance with national, state/provincial/territorial, and local regulations.
10. Before you do any repair work, disconnect the main power connectors.

1.2-4 Hydraulic system & component maintenance and repair

⚠ WARNING

The fluid which escapes from a high-pressure hydraulic leak can damage your eyes, penetrate your skin, and cause serious injury. Wear the correct personal protective equipment at all times.

1. The hydraulic circuits include relief valves which limit pressure to safe operation values. They help to prevent the failure of hydraulic or structural components.
2. Make sure the hydraulic oil is completely clean. Even small amounts of dirt or unwanted materials in the system can damage components and cause unsatisfactory operation of the hydraulic system.
3. Drain and flush the entire system and replace the filter cartridges if you have any reason to believe there is contamination of the hydraulic system, or hydraulic system failure.
4. When you drain the hydraulic system, check the magnets in the hydraulic tank for metal particles. Metal particles can indicate imminent component failure. If metal particles are present, flush the entire system and change the hydraulic oil.
5. All containers and funnels used in handling the hydraulic oil must be completely clean. Use a funnel when necessary and fill the reservoir only through the filter opening. Do not use a cloth to strain the oil, as lint could get into the system.
6. When you remove a hydraulic component, cap and tag all of the hydraulic lines involved. Plug the ports of the removed components.
7. Disassemble hydraulic components in clean surroundings. Carefully identify the parts to make sure you reassemble them correctly. Clean all metal parts in a clean mineral oil solvent. Be sure to clean all internal passages fully. After the parts are dry, lay them on a clean, lint-free surface for inspection.
8. Replace all O-rings and seals when you overhaul a component. Lubricate all parts with clean hydraulic oil before you reassemble them. Use a small amount of petroleum jelly to hold O-rings in place during assembly.
9. Be sure to replace lost hydraulic oil after you install the repaired component. Bleed air from the system when required.
10. Keep all hydraulic connections tight. A loose connection in a pressure line allows the oil to leak or draw air into the system. Air in the system can damage components and cause noisy or erratic system operation.
11. Preventive maintenance is the easiest and least expensive type of maintenance.

1.2-5 Hydraulic oil maintenance

Draw samples of hydraulic oil from the reservior annually and test them.

- Take these samples when the oil is warmed through normal operation of the system.
- Have the sample analyzed by a qualified lubrication specialist to determine if it is suitable for continued use.

Oil change intervals depend on the care used to keep the oil clean, and the operating conditions.

- Oil must be changed more often when there is dirt or moisture contamination.
- Under normal use and operating conditions, you should change the hydraulic oil every two years. Refer to Table *1.3-5 Frequent/periodic/annual/ pre-delivery inspection checklist* of this manual.

1.2-6 Hydraulic maintenance tips

1. Change the filters annually. Dirty, dusty, and high-moisture environments can cause the hydraulic system to be contaminated more quickly. You may need to change the filters more often.
2. Keep a sufficient quantity of clean hydraulic oil of the correct type and viscosity in the hydraulic tank.
3. Keep all hydraulic connections tight.

1.2-7 Railing maintenance and repair

Skyjack MEWPs have been designed to ensure compliance with the relevant design standards applicable for that particular unit at the time of manufacture. As such, any repairs made to the guardrail or basket structure need to ensure this compliance is not compromised and must return the structure to its original condition.

Any damage must be repaired by returning the railing assembly to its undamaged state. Damage includes, but is not limited to, the items listed below:

- Bent/deformed guardrail sections
- Cracks or broken welds in railing sections
- Damaged pin connections
- Missing pins or broken pin lanyards
- Missing railing hardware
- Loose or missing parts
- Additional holes in guardrail sections other than those approved by Skyjack

Additionally, the guardrails must be properly positioned and secured, and the entry gate must be in good working order.

The strength of the guardrail system, and therefore its ability to provide fall protection for platform occupants, depends upon the design being secure and undamaged.

Skyjack railings are designed for modular replacement, and Skyjack recommends replacement of any damaged railing section. Skyjack-approved replacement parts will meet this requirement.

1.2-8 Multi-conduction control cable repair

If damage occurs to the outer casing of a multi-conductor control cable, you may use heat shrink tubing to case and protect the control cable casing.

Before you install the heat shrink, make sure there is no damage to the individual wires contained in the control cable, or to their insulation.

The heat shrink tubing selected and used should seal the electrical circuit from water intrusion, be suitable for the machine operating temperature range, and be suitably flexible to allow the required bending radius of the cable in its application.

1.3 Scheduled maintenance and inspections

1.3-1 Service bulletins

Before performing any scheduled maintenance inspection procedure, refer to the service bulletins found on our website: *www.skyjack.com* for updates related to the service and maintenance of this MEWP.

1.3-2 Maintenance and inspections

Death or injury can result if the MEWP is not kept in good working order. Inspection and maintenance should be done by competent personnel who are trained and qualified on maintenance of this MEWP.

⚠ WARNING

Failure to perform each procedure as presented and scheduled may cause death, serious injury, or substantial damage.

NOTE

Preventive maintenance is the easiest and least expensive type of maintenance.

- Unless otherwise specified, do each maintenance procedure with the MEWP in the following configuration:
  - Park the MEWP on a flat and level surface
  - Disconnect the batteries by disconnecting the main power connectors.
- Repair damaged or malfunctioning components before operating the MEWP.
- Keep records of all inspections.

1.3-3 Schedule and instructions

The actual operating environment of the MEWP may affect the maintenance schedule.

The inspection points covered in the *1.3-5 Frequent/periodic/annual/pre-delivery inspection checklist* indicate the areas of the MEWP to be maintained or inspected, and at what intervals the maintenance and inspections are to be done.

Inspection schedule frequency:

PDI/Frequent/ Periodic	**B**	Do a PDI before each delivery, or a Frequent Inspection every 200 days or 200 hours.
Annual	**C**	Do a Scheduled Maintenance Inspection every year.
Additional	*****	Do this at time-sensitive maintenance intervals.

- Make copies of the maintenance and inspection checklist to be used for each inspection.
- Check the schedule on the checklist for the type of inspection to be done.
- Place a check mark in the appropriate box after each inspection procedure is done.
- Use the maintenance and inspection checklist and the step-by-step procedures in *1.3-6 Inspection points*.
- If an inspection receives a fail, tag and remove the MEWP from service.
- If a MEWP components has been repaired, do an inspection again before you remove the tag. Place a check mark in the repair column.

Legend

Pass	**P**
Not applicable	**N/A**

1.3-4 Repairs

When repairs are made to a MEWP, the service technician must complete the full pre-operation inspection and function tests before putting the MEWP into service.

IMPORTANT

Never use a malfunctioning MEWP. If malfunctions are discovered, tag the MEWP and remove it from service.

1.3-5 Frequent/periodic/annual/pre-delivery inspection checklist

Frequent/Periodic/Annual/PDI Checklist

Vertical Mast, Electric Scissors, and Rough Terrain Scissors

Serial Number: Starting with serial number A/B/C000 000 000 or 09 000 000 and above

Model:

Hourmeter Reading:

Product Owner:

Product User/Inspector:

Date/Time:

Inspection Type (choose one): ☐ Pre-delivery ☐ Frequent ☐ Periodic ☐ Annual

Use this table for pre-delivery inspections (PDI) before each rental, lease or sale and as an instruction for all frequent inspections and annual inspections. Refer to the operation and service manuals for inspection instructions (for example, visual inspection and function tests, torque specs, engine oil, chain inspection intervals, and more).

Inspection Type Schedule	
PDI/Frequent/Periodic	B
Annual	B+C

B - Do the pre-delivery inspection before the machine is sent out or during the frequent inspections at 200 days or 200 hour intervals. For more instructions, refer to the operation and service manuals.
C - Do the scheduled maintenance Inspections each year. For more instructions, refer to the operation and service manuals.

P - Pass
N/A - Not Applicable

IMPORTANT! Wash the MEWP thoroughly to remove dirt, debris, road salt, etc., as necessary due to operating conditions, as soon as possible after transportation, and before pre-delivery inspections.

Put a check mark on the "Pass" column as you meet the requirements of the inspection of each item. Add a comment if the item does not pass inspection.

Items for Inspection		P	N/A
Service Bulletins. Make sure there are no open service bulletins.	B		
Annual Inspection. Make sure you complete it within 13 months.	B		
Labels. In place, correctly attached and you can read them.	B		
Limit/Rotary Switches. Correctly installed and no obstructions or damage.	B		
BASE/ENGINE			
Engine and Components. Do a check on engine and components for any loose, missing, damaged, or failed items. Make sure you do not exceed the recommended fluid, oil and coolant change intervals.	B		
Engine and Components. Replace the engine oil and filter.	C		
Engine Intake Air Filter. No damage or missing component. Remove dirt and dust.	B		
Engine Intake Air Filter. Replace the air filter if necessary.	C		
Engine Oil. Oil level between "L" and "H". Make sure you do not exceed the oil change interval.	B		
Radiator. Correctly attached and no damage or missing components. Do a check of coolant level.	B		
Radiator. Do a check of the coolant level and condition and replace if necessary.	C		
Fuel Tank and Lines. Filler cap, tank, fittings and hoses are tightly closed and no damage or leaks.	B		
Propane Tank and Lines. Straps are correctly installed to brackets and couplers are tight. Make sure there are no damage or leaks.	B		
Outriggers. No damage or missing components.	B		
Pothole Protection. Both sides have no obstructions, dirt or damage.	B		
Battery/Hydraulic Tray. Trays are latched tightly and no missing components.	B		
Batteries. No damage, tight connections and sufficient fluid levels. Clean terminals and cable ends.	B		
Battery Charger. Correctly attached and no damage.	B		
Steer Assembly. Correctly attached and no damage leaks or missing components.	B		
Wheel/Tire Assembly. Do a check of all tires for damage, missing parts, wear and correctly aligned.	B		
Wheel/Tire Assembly. Wheel nuts/bolts are installed and are tight.	B		
Axles. Correctly attached and no missing components. Tight fittings and hoses and no leaks.	B		
Axles. Do a check and replace oil if necessary.	C		
Oscillating Cylinders. Correctly attached and no missing components. Tight fittings and hoses and no leaks.	B		
Oscillating Cylinders. Do a check of the mounting bolts' torque seal.	C		
Hydraulic Tank, Pump, Motor and Lines. Filler cap, hoses, and other hydraulic components are closed tightly and no damage or leaks.	B		
Hydraulic Oil. Level at, or slightly above top mark.	B		
Hydraulic Oil. Do a check and replace oil and filters if necessary.	C		
Electrical Components. Do a check on all electrical components such as the motor controller if necessary. Correctly attached and no damage. Tight wire connections and fasteners.	B		

Items for Inspection		P	N/A
Manifolds. Tight fittings and hoses and no damage or leaks. Tight wire connections, no missing components and correctly working valves.	B		
Main Power Disconnect Switch. Cables tight and in working order.	B		
Base Controls. Operate switches and make sure they all operate correctly. No damage or missing components.	B		
Brakes. Correctly attached and no damage or leaks.	B		
Brakes. Do a check on disc wear and replace if necessary.	C		
Base Weldment. No deformation or cracks.	B		
Grease Points. No obstructions, dirt, or damage. Add grease if necessary.	B		
Ladder. Correctly attached and no damage.	B		
Tilt Sensor. Correctly attached and no damage.	B		
LIFTING MECHANISM - MAST/SCISSORS			
Maintenance Support(s). Correctly attached and no damage.	B		
Scissor Assembly and Bumpers. Correctly attached, no deformation/damage. Cables and wires installed with no damage.	B		
Sliders and Rollers. Correctly attached and no obstructions, dirt, or damage/wear.	B		
Lift Cylinder(s). No damage or missing components. Tight fittings and hoses and no leaks. Correctly installed.	B		
Height Sensor. Correctly attached and no damage.	B		
Scissor Pins. Correctly attached and no damage.	B		
Mast Assembly. No damage, cracks or deformation.	B		
Mast Assembly. Lubricate the mast as recommended.	C		
Chains, Rollers and Control Cables. No damage or missing components.	B		
Wear Pads. No damage/wear or missing components. Fasteners tight.	B		
PLATFORM			
Railings and Gate. Correctly attached and no damage or missing components.	B		
Fall-Protection Anchorage. Attachment rings correctly attached and no damage.	B		
AC Power Socket. No obstructions, dirt, or damage.	B		
Platform Control Console. Operate the switches and make sure they all operate correctly. No damage or missing components.	B		
Manual Storage Box. Manuals and documents are in storage box, in good condition, and you can read them.	B		
Powered Extension Control Console. Operate switches and make sure they all operate correctly. No damage or missing components.	B		
Extension Platform. Correctly attached and no damage or missing components.	B		
Function Tests. Refer to the operation manual for your serial number for information on how to run these tests.			**PASS** / **FAIL**

199341AHA

Comments:

The undersigned has made sure that all areas in the list have received an inspection.
The undersigned has told the machine owner of all inconsistencies in the inspection and corrected them before machine operation.

Owner: Print Name _____ Signature _____ Date (DD/MM/YY) _____

User/Inspector: Print Name _____ Signature _____ Date (DD/MM/YY) _____

1.3-6 Inspection points

Refer to *1.3 Scheduled maintenance and inspections* for more information and the inspection schedule.

⚠ WARNING

Environmental hazard. Immediately remove gasoline, diesel fuel, engine oil, and hydraulic fluid spills and leaks with rags. Discard these rags in accordance with national, state/provincial/territorial, and local regulations. Spilled fluids can damage the environment. When spilled fluids go into the water (for example, a sewage system, streams, rivers, or other surface water), they can kill aquatic life.

Legend


Visual inspection


Action required


Filters


Fluids


Grease



Inspection frequency


Procedure available in Section 5


Return to the PDI form

Use the *1.3-5 Frequent/periodic/annual/pre-delivery inspection checklist* and do the inspections that follow:

Labels



- Refer to the operation manual. Make sure all labels are present and in the correct location, in good condition, and are legible. Ⓑ

Electrical components



- Do a check of all electrical components and harnesses for chafed, corroded, loose, or damaged wires and connectors. Make sure the connections are tight.
- Make sure all switches and buttons rotate or move to all positions, are in good condition, and return to the neutral position. Make sure the switches haven't been tampered with or disabled.
- Make sure the limit switches do not have broken or missing actuator arms. Ⓑ

Fluids and Filters



- Make sure all fittings and hoses are correctly tightened.



- Make sure the hydraulic tank cap is tightly closed.
- If the filter has a service indicator on it, replace the filter element if indicated.
- Look for hydraulic oil leaks.
- Do a check of the hydraulic oil level. Add more fluid if necessary.

All components



- Make sure there are no loose or missing parts.



- Make sure there is no visible damage, including cracks or deformities in welded parts.
- Make sure all hardware is present and the fasteners are tight.
- Make sure all pins are present and the fasteners are tight.
- Additional inspection items are listed on the following pages.

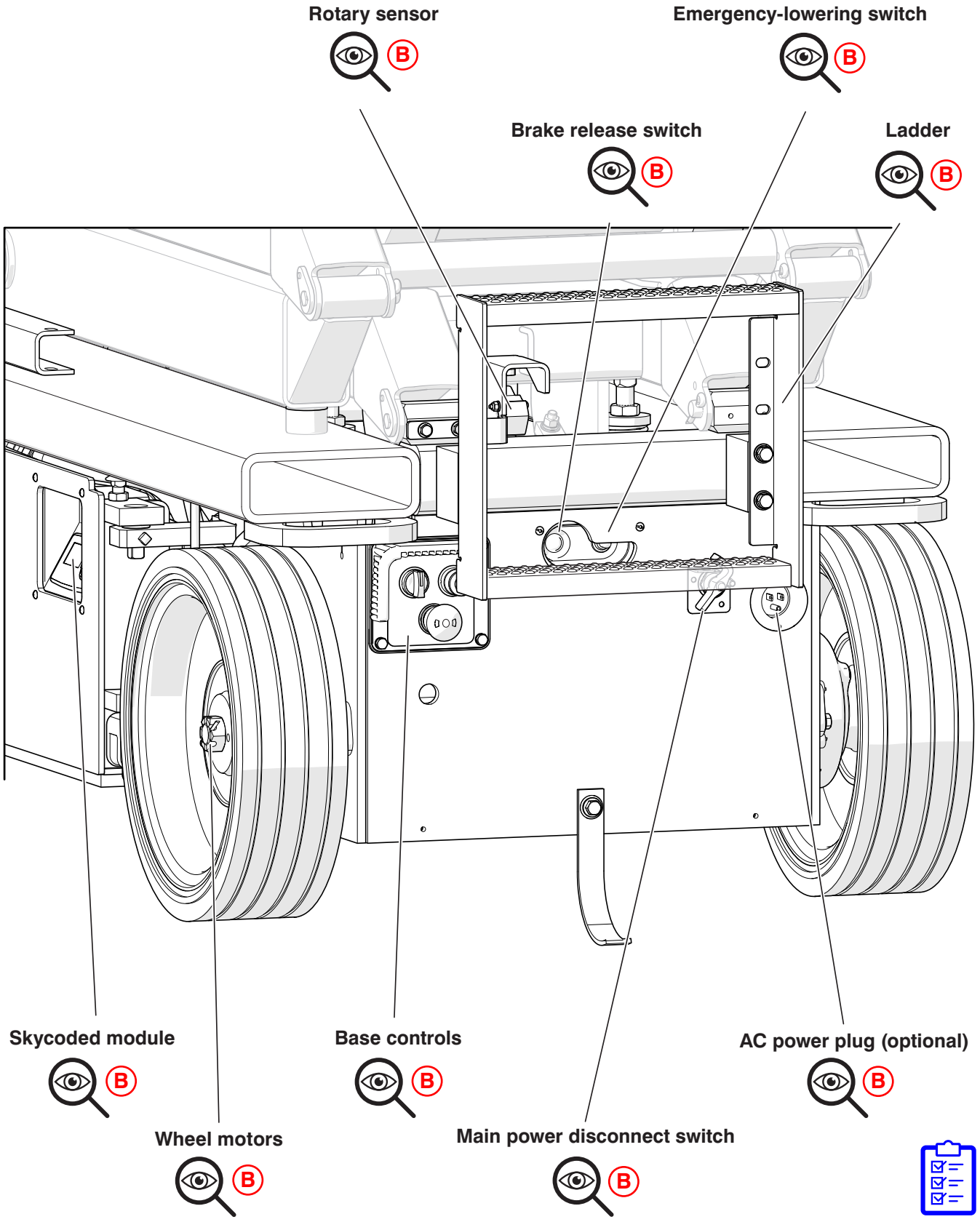
Rotary sensor
B
Emergency-lowering switch
B
Brake release switch
B
Ladder
B
Skycoded module
B
Base controls
B
AC power plug (optional)
B
Wheel motors
B
Main power disconnect switch
B

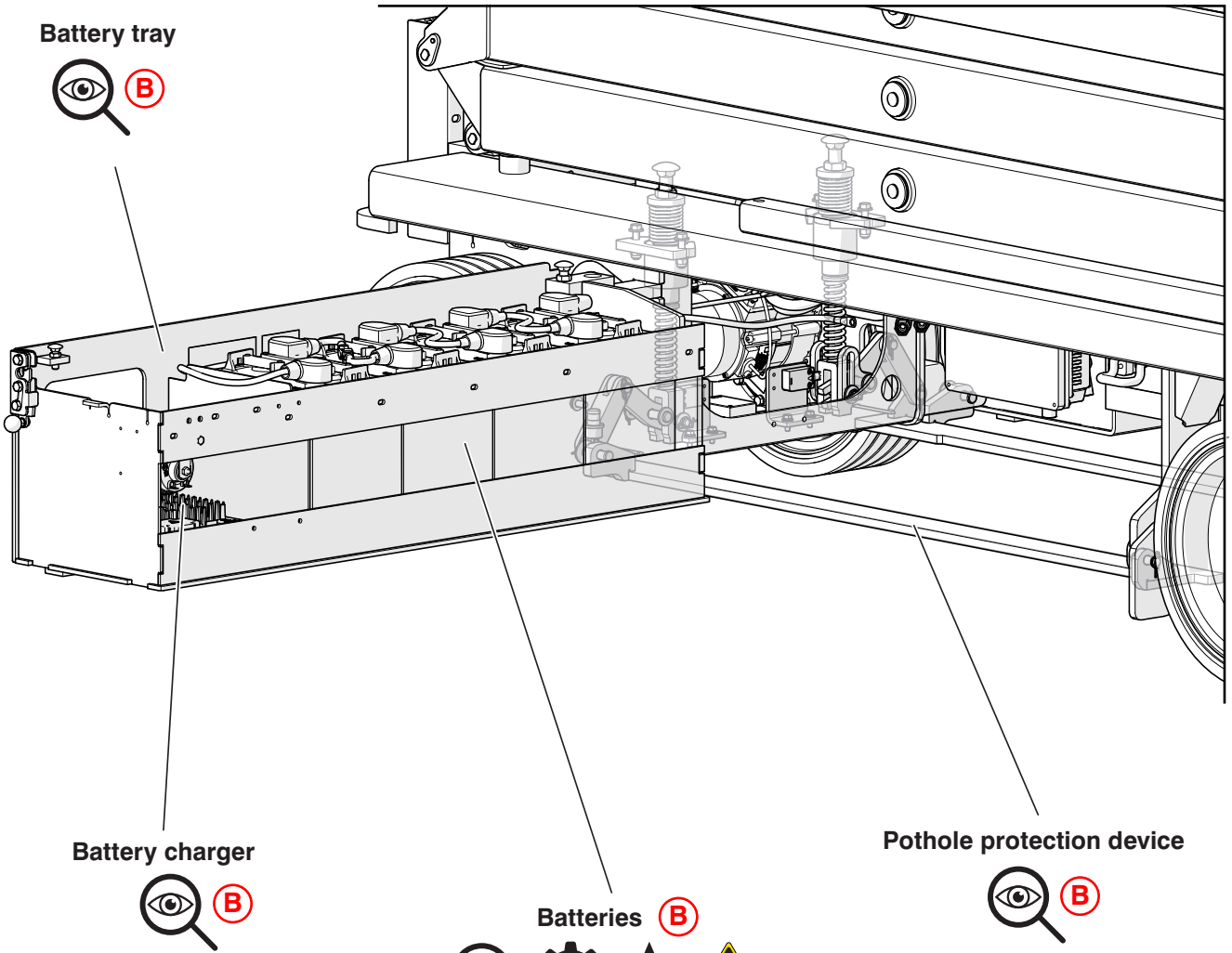

1. Do an inspection of the battery case for damage.
2. Clean the battery terminals and cable ends thoroughly with a terminal cleaning tool or wire brush.
3. Make sure all the battery connections are tight.
4. If applicable, check the battery fluid level.
   - If the plates do not have a minimum 13 mm (1/2 inch) of solution above them, add distilled or demineralized water.
   - Replace the battery if it is damaged or cannot hold a lasting charge.

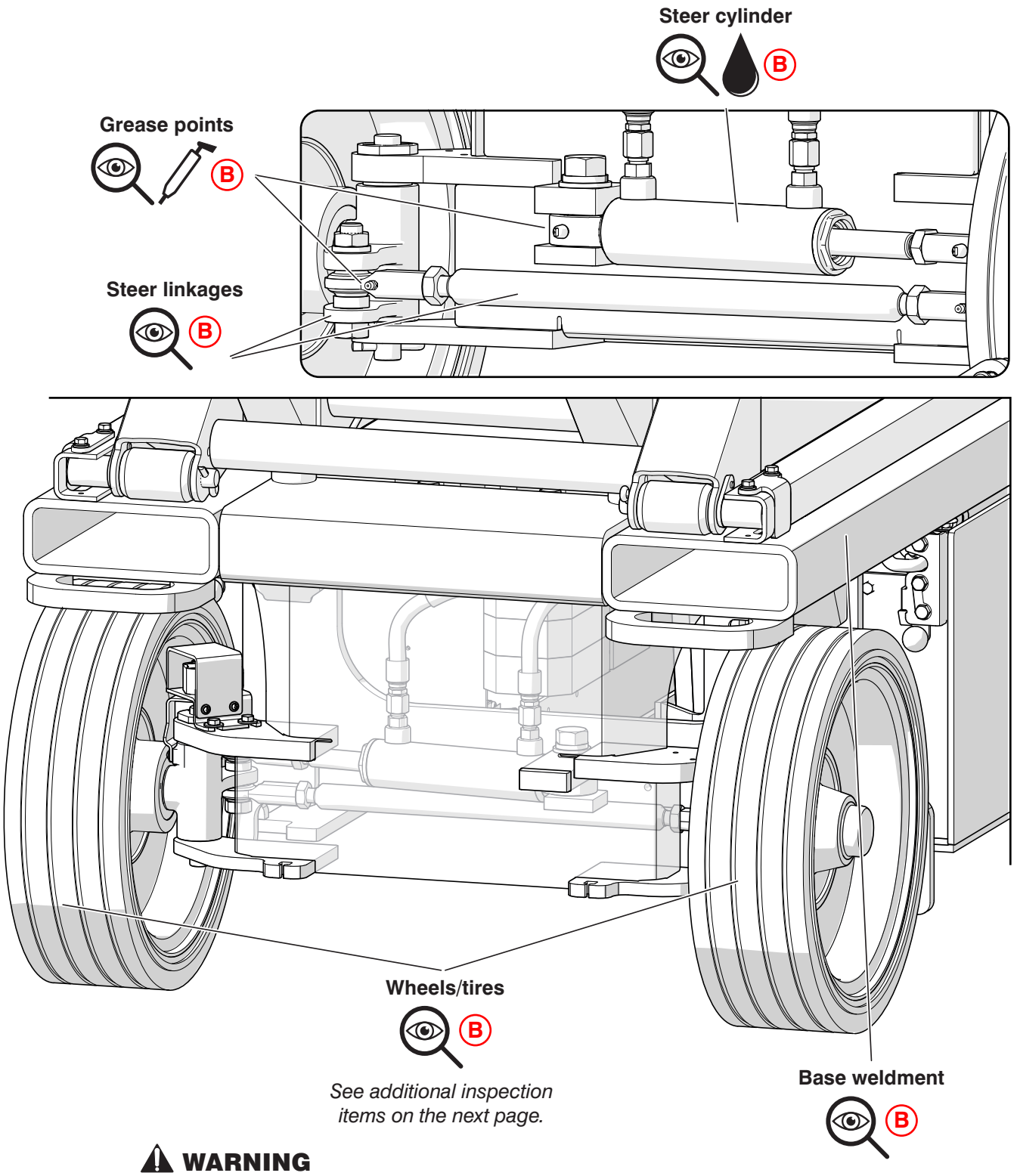

See additional inspection items on the next page.

⚠ WARNING

Do not use tires other than those that Skyjack specifies for this MEWP. Do not mix different sizes or types of tires, or use tires that are not in good condition. Only replace the tires with the same types that are approved by Skyjack. The use of other tires can make the MEWP less stable. If you do not obey, there is a risk of death or serious injury.

The tire treads have been removed from the illustration for clarity.

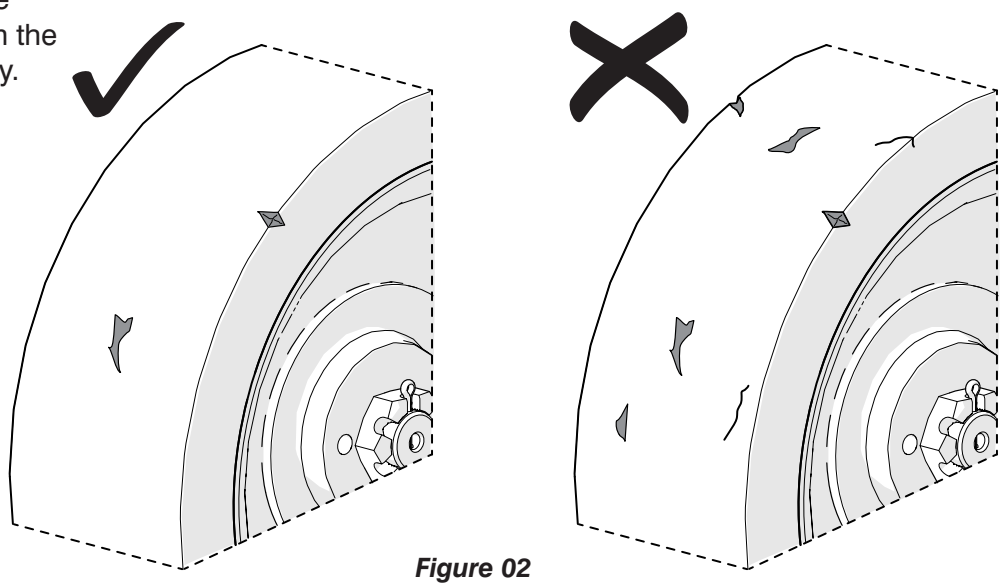

Figure 02

A small amount of wear is permitted. But if any of the wear or damage meets the criteria mentioned below, the tire should be replaced.

- **B - Frequent/periodic/pre-delivery inspection**

Do a check for damage or wear on each tire and rim.

- Look for damage or cracked welds on each rim. The rims should be round.
- Look for uneven or unusual wear on the tire.
- Look for flat spots on the tread face of the tire.
- The tire tread should be visible and not worn down completely. Refer to Figure 01.

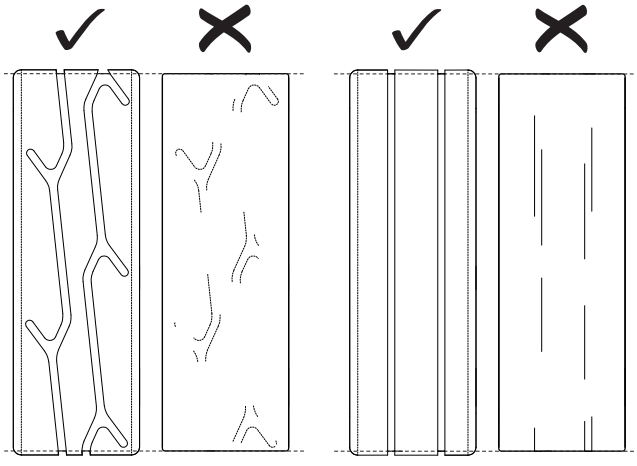

Figure 01

Do a check for cuts or missing chunks in the edges and tread face of the tire. Refer to Figure 012.

- The cut or missing chunk must not extend more than 10 mm (3/8”) towards the centre of the tire.
- Each cut or chunk should not be larger than 25 mm x 10 mm (1” x 3/8”), or deeper than 20 mm (3/4”).
- There should be no more than 2 cuts or chunks in each 1/4 section of the tire. There must be no more than 6 cuts or chunks in total in the tire.
- There should be no embedded debris.

Do a check of the wheel components and mounts.

- Make sure the wheels are correctly aligned vertically and horizontally.
- Make sure the **wheel motors** have no loose or missing parts and there is no visible damage.
- Make sure the **castle nuts** are in position and are tight.
- Make sure the **cotter pins** are correctly installed.
- If the cotter pin is not installed, refer to *2.6 MEWP torque specifications* for torque information.

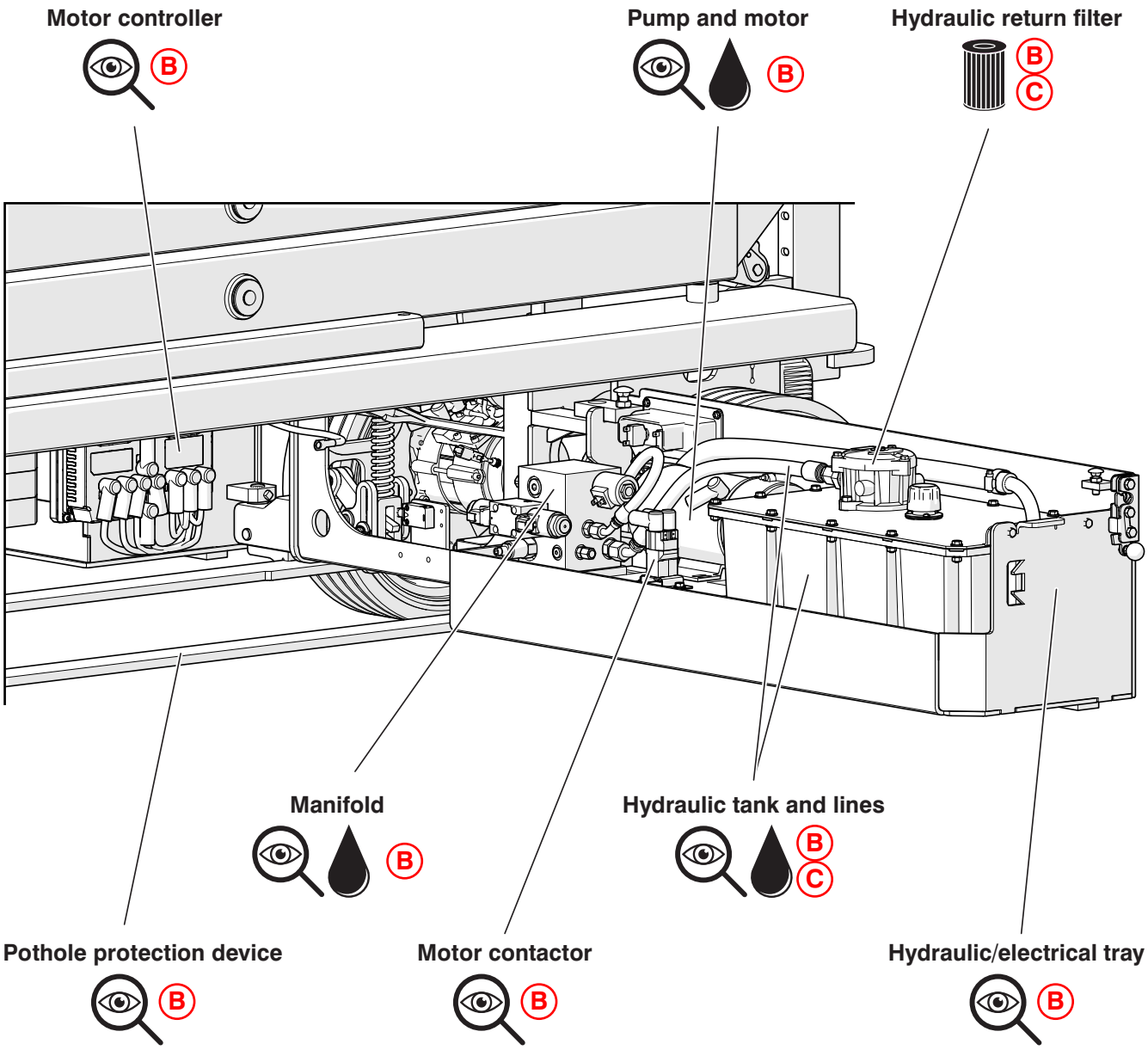
Motor controller
B
Pump and motor
B
Hydraulic return filter
B
C
Manifold
B
Hydraulic tank and lines
B
C
Pothole protection device
B
Motor contactor
B
Hydraulic/electrical tray
B

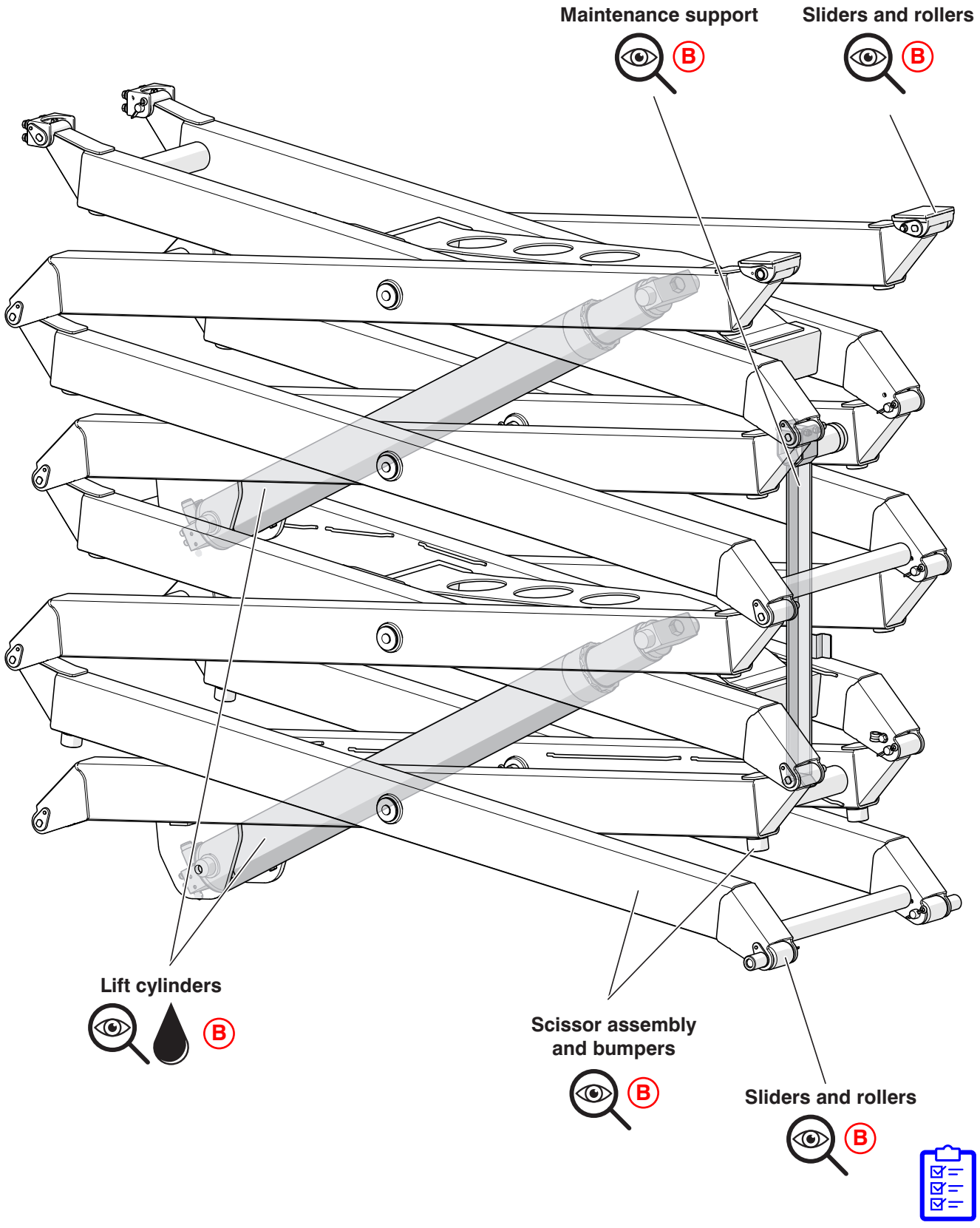
Maintenance support
B
Sliders and rollers
B
Lift cylinders
B
Scissor assembly and bumpers
B
Sliders and rollers
B

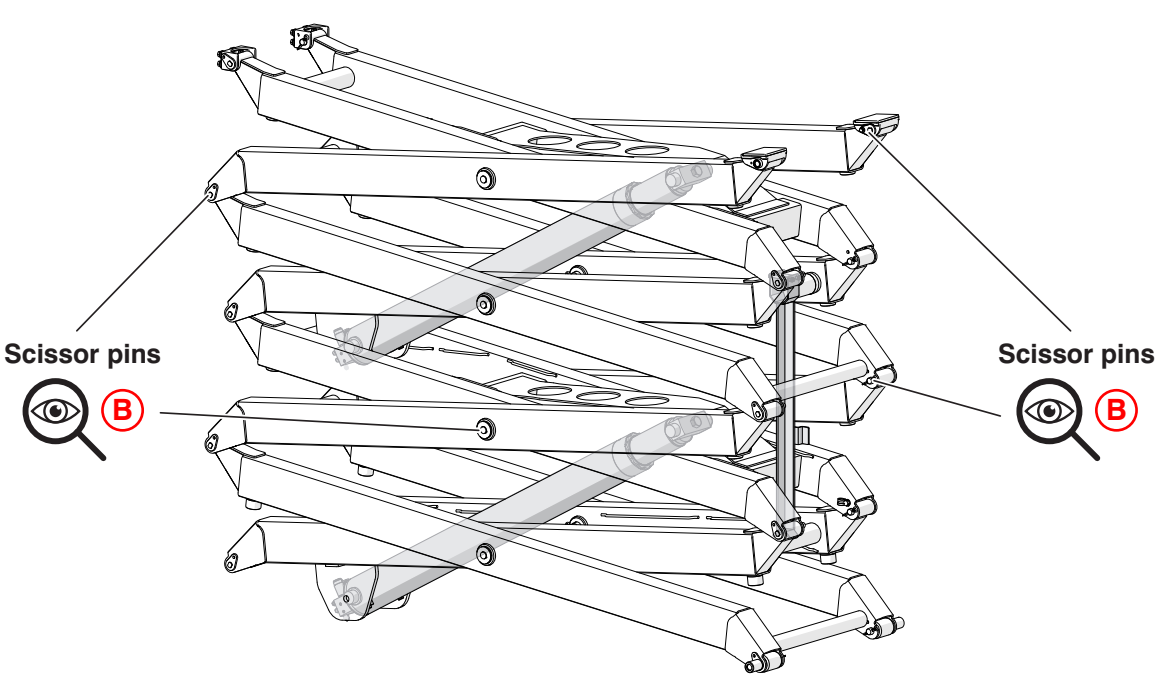

Scissor pin inspection (B)

⚠ WARNING

Units that show signs of damage must be immediately removed from service and repaired by a qualified technician. Speak to the Skyjack service department for directions on how to repair the unit.

1. Do an inspection of the scissor pin connections. Look for signs of damage on the pins and scissor arms. These signs can include:
   - Noise can be heard from seized pins.
   - Rust near the pin joint
   - Cracks in welds of adjacent metals
   - Dust or metal shaving from worn components
   - Broken or missing pin retainer bolts
   - Broken or missing pin retainers
   - Rotated pin
   - Elongated or enlarged pin hole
2. Remove damaged pins and bushings. Do an inspection of the scissor bore after removing the applicable pins and bushings. Look for signs of damage, elongation and ovality of the hole.
3. If there is no structural damage to the scissor arms, replace the pins and bushings with new components.

Examples of pivot pin connections with no damage:

- No rust
- Pin has not rotated
- Area is clear of dust or metal shavings
- Pin retainers are installed

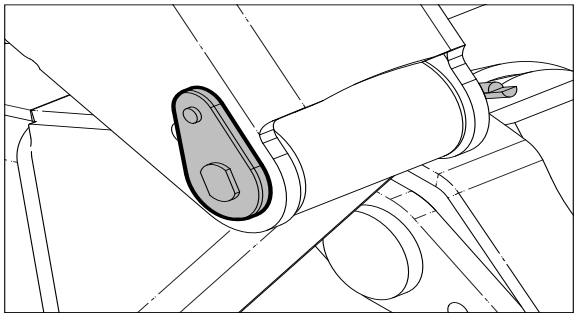

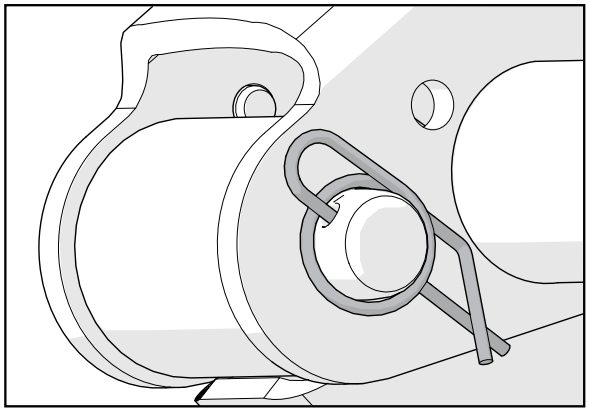

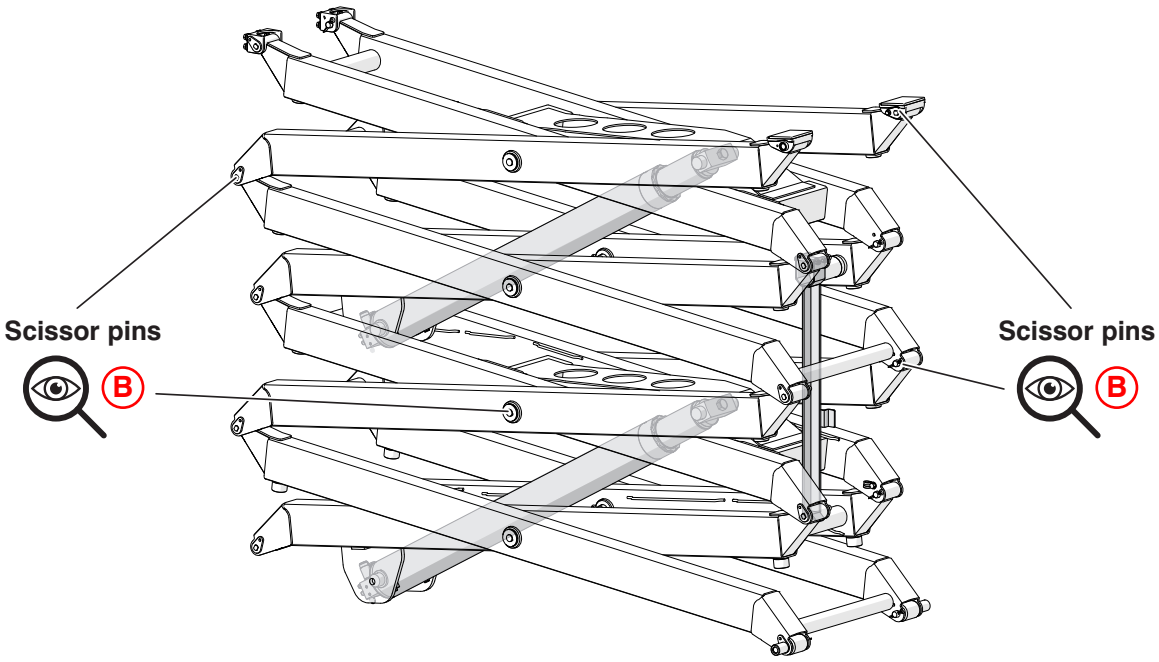

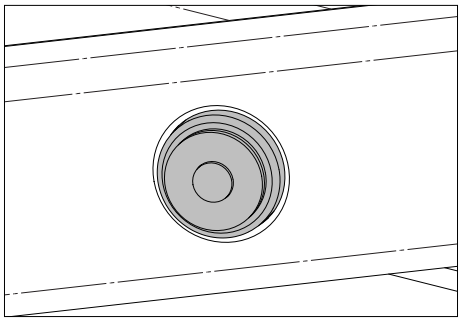

Center Pin - Outer

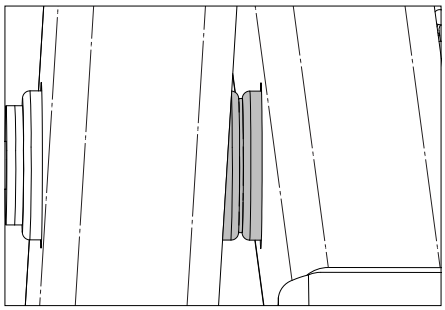

Center Pin - Middle

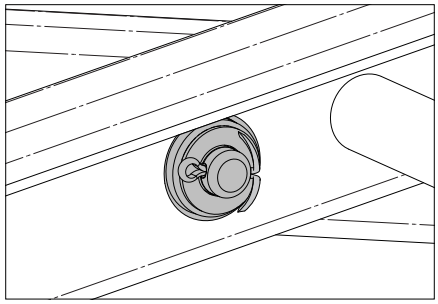

Center Pin - Inner

Examples of damaged pin connections:

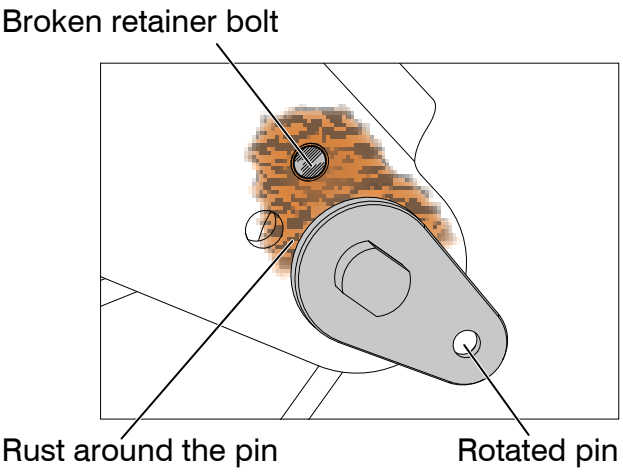

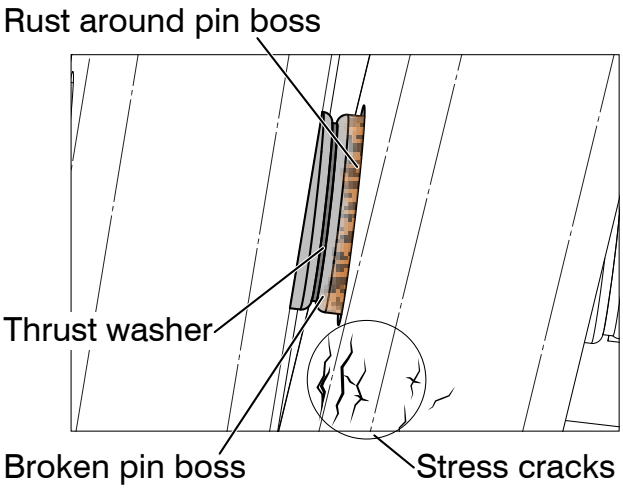

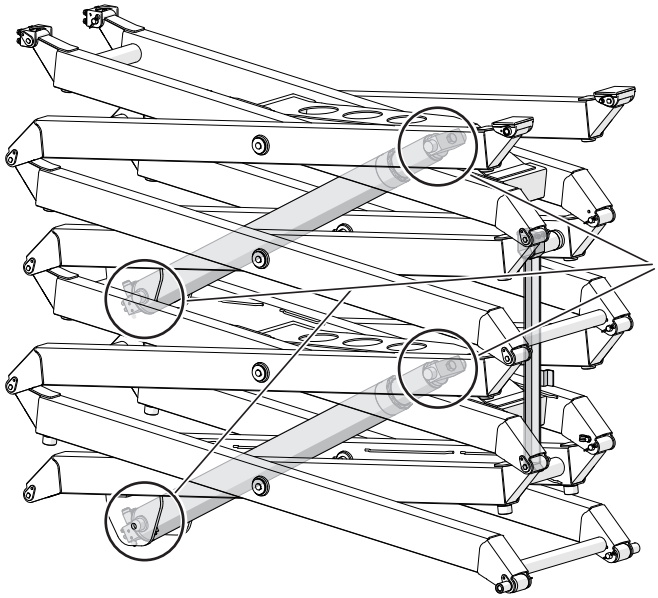

Upper cylinder mount area

Cylinder mounts

B

Lower cylinder mount area

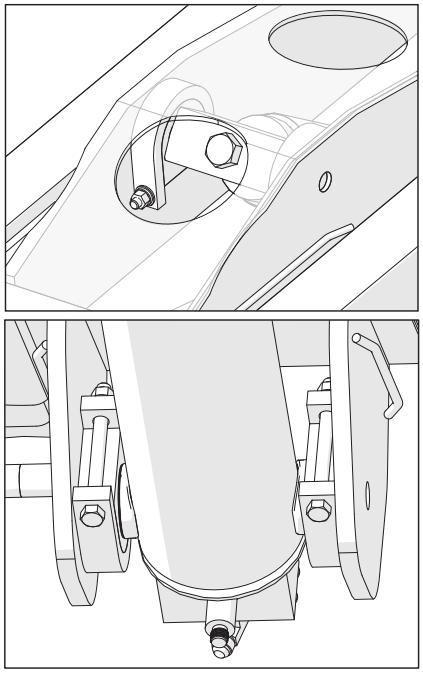

Cylinder mount inspection (B)

This inspection must be done as part of the scissor assembly inspection.

1. Do a structural inspection of the cylinder mount areas. Look for signs of damage to the mounts.
1. These signs can include:
   - Broken, loose or missing retainers or bolts
   - Bearing block degradation
   - Cracks in welds or the surrounding metal, or rust forming in the area.

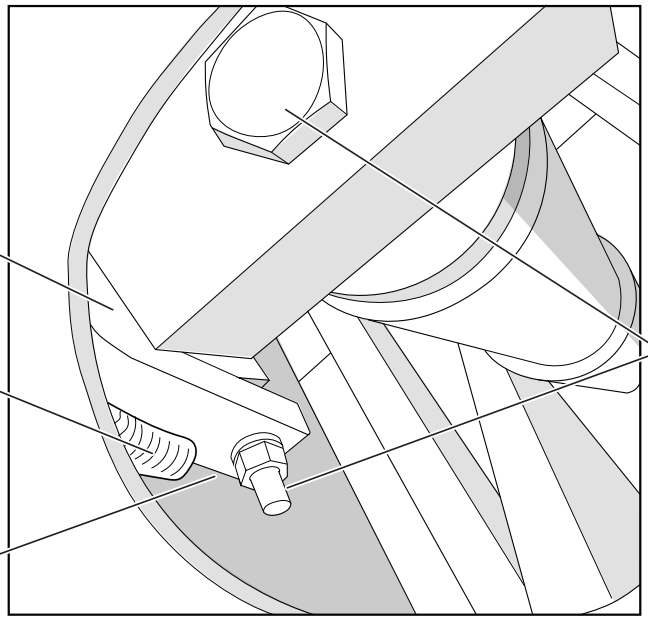

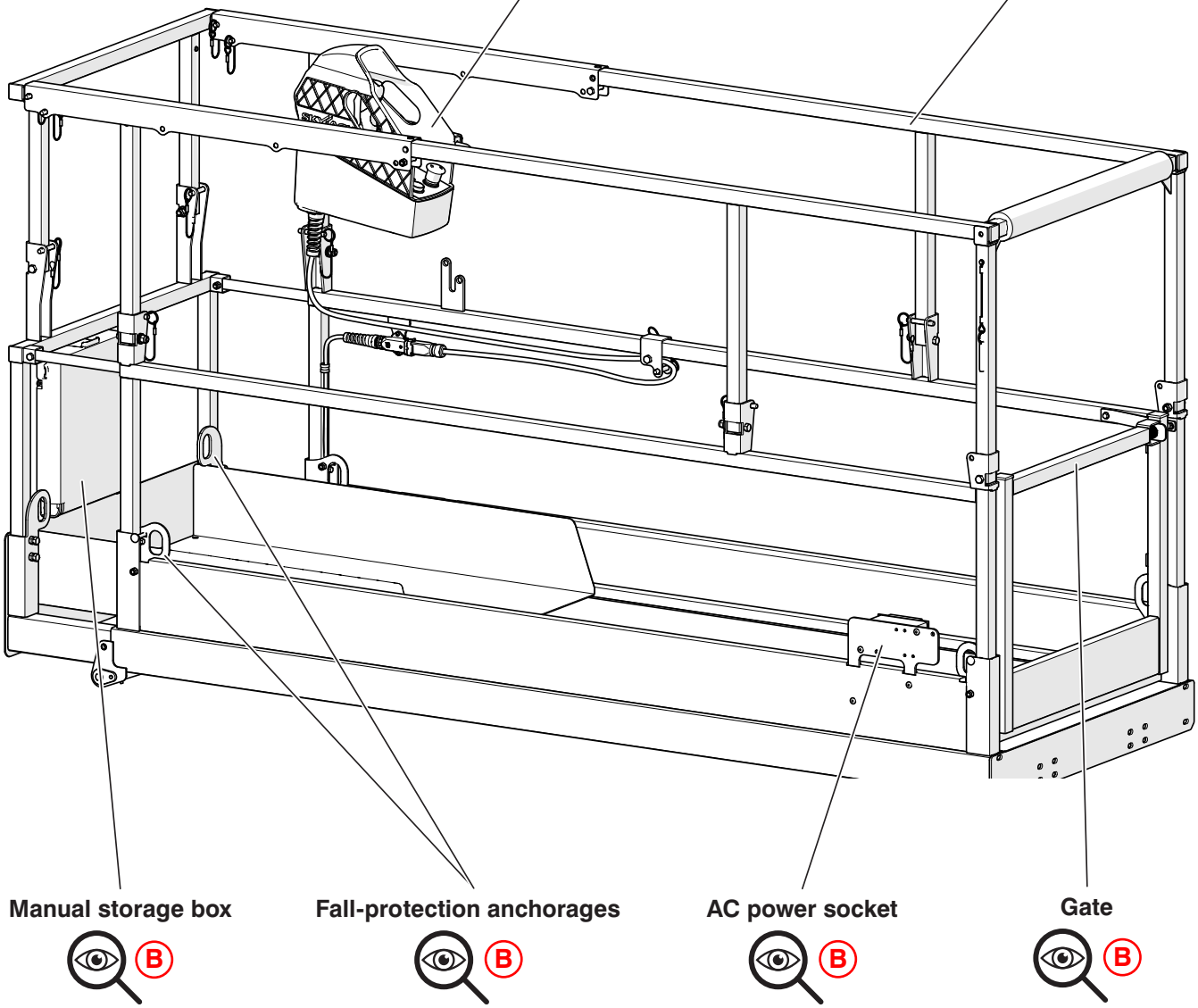

- Make sure the gates operates correctly.

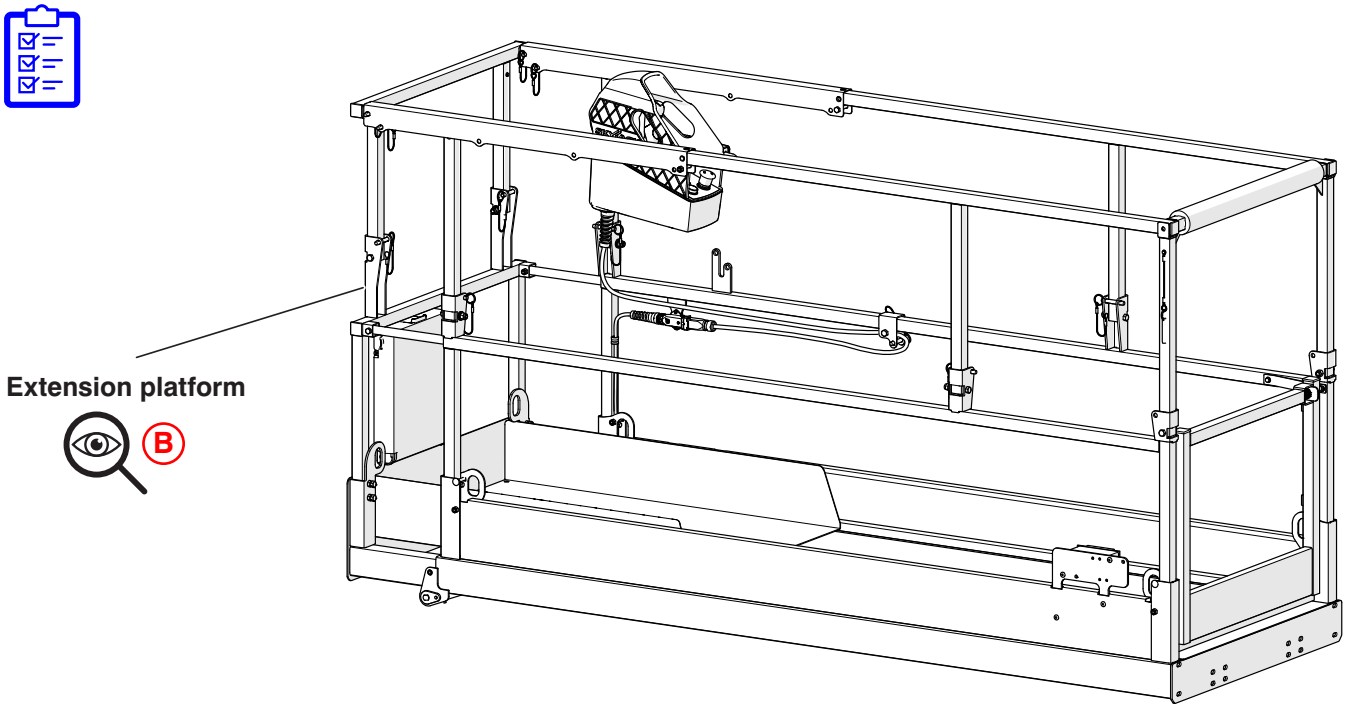

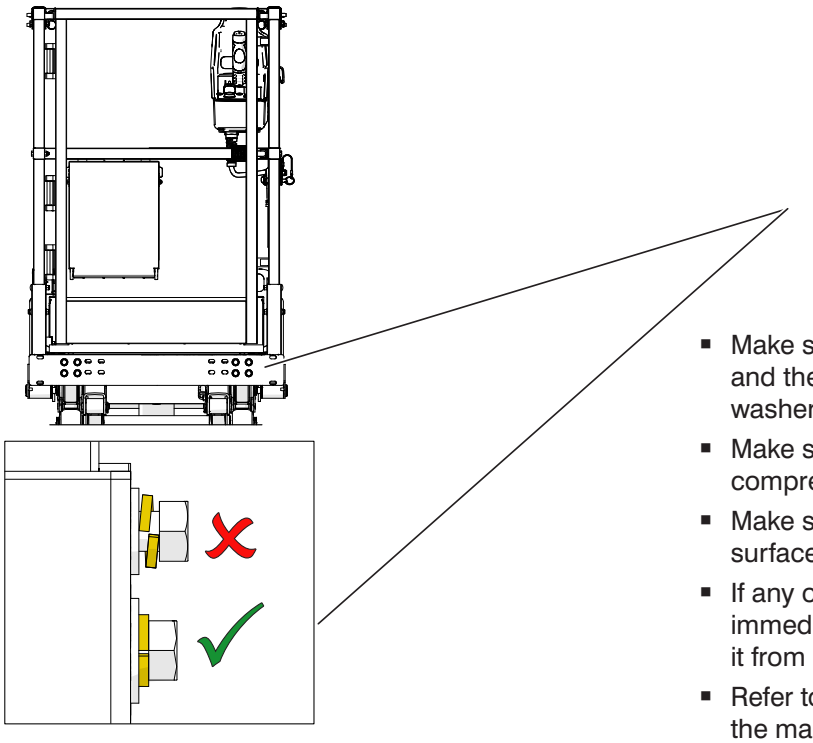

Platform mounting hardware

B

- Make sure the fasteners are correctly installed and there are no missing or loose bolts, flat washers, or spring washers.
- Make sure the spring washers are fully compressed.
- Make sure there is no damage on the platform surface next to the flat washers.
- If any of the above conditions are not met, immediately tag and lock the MEWP and remove it from service for repair.
- Refer to *5.2-3 Platform mounting hardware* for the maintenance/installation procedure.

1.3-7 Function tests

Do the function tests after you complete the inspections.

Refer to the *"Inspections before operation"* section of the operation manual for detailed instructions on how to do the function tests.

Section 2 – Specifications

2.1 Standard hose numbering system

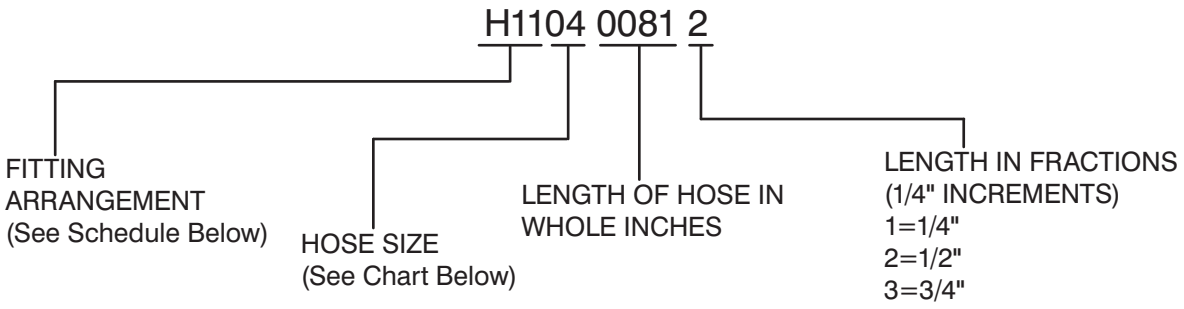

Using the number above as an example, H1104 0081 2, this hose requires a 37° JIC female swivel fitting on one end, and a medium length 90° JIC female swivel fitting for the other end. The hose must meet or exceed the S.A.E. 100R13 hose specification, and be a total of 81-1/2" long.

NOTE

Hose ends and hose must be from same manufacturer per S.A.E. J1273 Nov. '91, Sections 3.10 and 4.2. Hose ends and hose must be of the same size i.e. #4 size fittings must be used with #4 size hose.

Hose Size Chart														
Size	03	04	06	08	10	12	16	20	24	32	40	48	56	64
ID	3/16"	1/4"	3/8"	1/2"	5/8"	3/4"	1"	1-1/4"	1-1/2"	2"	2-1/2"	3"	3-1/2"	4"

Fitting Arrangement Schedule			
Hose Prefix	**Hose End Fitting**	**Hose End Fitting**	**S.A.E. Hose Specification**
H01	FEMALE, 37° JIC, SWIVEL	FEMALE, 37° JIC, SWIVEL	100R17
H02	FEMALE, 37° JIC, SWIVEL	FEMALE, 37° JIC, SWIVEL	100R13
H03	FEMALE, 37° JIC, SWIVEL	45°, FEMALE, 37° JIC, SWIVEL	100R17
H04	FEMALE, 37° JIC, SWIVEL	45°, FEMALE, 37° JIC, SWIVEL	100R13
H05	FEMALE, 37° JIC, SWIVEL	LONG 90°, FEMALE, 37° JIC, SWIVEL	100R17
H06	FEMALE, 37° JIC, SWIVEL	SHORT 90°, FEMALE, 37° JIC, SWIVEL	100R17
H07	LONG 90°, FEMALE, 37° JIC, SWIVEL	LONG 90°, FEMALE, 37° JIC, SWIVEL	100R17
H08	FEMALE, 37° JIC, SWIVEL	FEMALE, 37° JIC, SWIVEL	100R4
H09	FEMALE, 37° JIC, SWIVEL	45°, FEMALE, 37° JIC, SWIVEL	100R4
H10	FEMALE, 37° JIC, SWIVEL	MALE PIPE THREAD FITTING	100R17
H11	FEMALE, 37° JIC, SWIVEL	MEDIUM 90°, FEMALE, 37° JIC, SWIVEL	100R13
H12	SHORT 90°, FEMALE, 37° JIC, SWIVEL	SHORT 90°, FEMALE, 37° JIC, SWIVEL	100R17
H13	FEMALE, 37° JIC, SWIVEL	REUSABLE MALE PIPE THREAD FITTING	300 PSI
H14	REUSABLE MALE PIPE THREAD FITTING	NO FITTING	300 PSI

Hose Prefix	Hose End Fitting	Hose End Fitting	S.A.E. Hose Specification
H15	REUSABLE FEMALE, 37° JIC, SWIVEL	REUSABLE FEMALE, 37° JIC, SWIVEL	300 PSI
H16	NO FITTING	NO FITTING	100R4
H17	NO FITTING	NO FITTING	300 PSI
H18	REUSABLE, FEMALE, 37° JIC, SWIVEL	NO FITTING	300 PSI
H19	LONG 90°, FEMALE, 37° JIC, SWIVEL	FEMALE, 37° JIC, SWIVEL	100R13
H20	FEMALE, SHORT 37° JIC, SWIVEL	SHORT 90°, FEMALE, 37° JIC, SWIVEL	100R4
H21	FEMALE, SHORT 37° JIC, SWIVEL	SHORT 90°, FEMALE, 37° JIC, SWIVEL	100R2AT
H22	FEMALE, 37° JIC, SWIVEL	FEMALE, 37° JIC, SWIVEL	100R2AT
H23	FEMALE, LONG 37° JIC, SWIVEL	LONG 90°, FEMALE, 37° JIC, SWIVEL	100R2AT
H24	FEMALE, SHORT 37° JIC, SWIVEL	SHORT 90°, FEMALE, 37° JIC, SWIVEL	100R13
H25	FEMALE, 37° JIC, SWIVEL	FEMALE, 37° JIC, SWIVEL	100R4
H30	MEDIUM 90°, FEMALE, 37° JIC, SWIVEL	FEMALE, 37° JIC, SWIVEL	100R17
H31	FEMALE, 37° JIC, SWIVEL	FEMALE, 37° JIC, SWIVEL	100R17
H32	SHORT 45°, FEMALE, 37° JIC, SWIVEL	FEMALE, 37° JIC, SWIVEL	100R17
H33	MEDIUM 45°, FEMALE, 37° JIC, SWIVEL	FEMALE, 37° JIC, SWIVEL	100R17
H34	SHORT 90°, FEMALE, 37° JIC, SWIVEL	FEMALE, 37° JIC, SWIVEL	100R17
H35	MEDIUM 90°, FEMALE, 37° JIC, SWIVEL	FEMALE, 37° JIC, SWIVEL	100R17
H36	LONG 90°, FEMALE, 37° JIC, SWIVEL	FEMALE, 37° JIC, SWIVEL	100R17
H37	SHORT 45°, FEMALE, 37° JIC, SWIVEL	FEMALE, 37° JIC, SWIVEL	100R4
H38	SHORT 90°, FEMALE, 37° JIC, SWIVEL	FEMALE, 37° JIC, SWIVEL	100R4
H39	LONG 90°, FEMALE, 37° JIC, SWIVEL	FEMALE, 37° JIC, SWIVEL	100R4
H40	SHORT 90°, FEMALE, 37° JIC, SWIVEL	FEMALE, 37° JIC, SWIVEL	100R16
H43	FEMALE, 37° JIC, SWIVEL	FEMALE, 37° JIC, SWIVEL	100R16
H51	FEMALE, 37° JIC, SWIVEL	FEMALE, 37° JIC, SWIVEL	100R17
H52	SHORT 45°, FEMALE, 37° JIC, SWIVEL	FEMALE, 37° JIC, SWIVEL	100R17
H53	MEDIUM 45°, FEMALE, 37° JIC, SWIVEL	FEMALE, 37° JIC, SWIVEL	100R17
H54	SHORT 90°, FEMALE, 37° JIC, SWIVEL	FEMALE, 37° JIC, SWIVEL	100R17
H55	MEDIUM 90°, FEMALE, 37° JIC, SWIVEL	FEMALE, 37° JIC, SWIVEL	100R17
H56	LONG 90°, FEMALE, 37° JIC, SWIVEL	FEMALE, 37° JIC, SWIVEL	100R17
H57	SHORT 45°, FEMALE, SAE ORFS, SWIVEL	FEMALE, SAE ORFS, SWIVEL	100R13
H58	FEMALE, SAE ORFS, SWIVEL	FEMALE, SAE ORFS, SWIVEL	100R13
H59	MEDIUM 90°, FEMALE, SAE ORFS, SWIVEL	FEMALE, SAE ORFS, SWIVEL	100R13
H60	FEMALE, 37° JIC, SWIVEL	FEMALE, 37° JIC, SWIVEL	100R17
H61	FEMALE, 37° JIC, SWIVEL	FEMALE, 37° JIC, SWIVEL	100R16
H62	SHORT 90°, FEMALE, 37° JIC, SWIVEL	FEMALE, 37° JIC, SWIVEL	100R16
H63	MEDIUM 90°, FEMALE, 37° JIC, SWIVEL	FEMALE, 37° JIC, SWIVEL	100R16
H64	LONG 90°, FEMALE, 37° JIC, SWIVEL	FEMALE, 37° JIC, SWIVEL	100R16
H65	MEDIUM 67°, FEMALE, 37° JIC, SWIVEL	FEMALE, 37° JIC, SWIVEL	100R12
H66	FEMALE, 37° JIC, SWIVEL	NO FITTING	100R4
H67	FEMALE, 37° JIC, SWIVEL	FEMALE, 37° JIC, SWIVEL	100R19
H68	SHORT 45°, FEMALE, 37° JIC, SWIVEL	FEMALE, 37° JIC, SWIVEL	100R19
H69	MEDIUM 90°, FEMALE, 37° JIC, SWIVEL	FEMALE, 37° JIC, SWIVEL	100R19
H70	LONG 90°, FEMALE, 37° JIC, SWIVEL	FEMALE, 37° JIC, SWIVEL	100R19
H71	LONG 90°, FEMALE, SAE ORFS, SWIVEL	FEMALE, SAE ORFS, SWIVEL	100R15

2.2 Torque specifications for fasteners (metric)

When specific torque values are not provided within this manual for a task, use the torque values given in the table below.

Size	Torque Type	8.8		10.9	
		Dry	Lubed	Dry	Lubed
M5 x 0.80	(in-lb)	(54)	(41)	(78)	(59)
	Nm	6.1	4.6	8.8	6.7
M6 x 1.00	(in-lb)	(92)	(69)	(133)	(99)
	Nm	10.4	7.8	15	11.2
M7 x 1.00	(in-lb)	(156)	(116)	(222)	(167)
	Nm	17.6	13.1	25.1	18.9
M8 x 1.25	(in-lb)	(225)	(169)	(333)	(242)
	Nm	25.4	19.1	37.6	27.3
M10 x 1.50	ft-lb	37	28	53	40
	Nm	50	38	72	54
M12 x 1.75	ft-lb	65	49	93	69
	Nm	88	66	126	94
M14 x 2.00	ft-lb	104	78	148	111
	Nm	141	106	201	150
M16 x 2.00	ft-lb	161	121	230	172
	Nm	218	164	312	233
M18 x 2.50	ft-lb	222	167	318	238
	Nm	301	226	431	323
M20 x 2.50	ft-lb	314	235	449	337
	Nm	426	319	609	457
M22 x 2.50	ft-lb	428	321	613	460
	Nm	580	435	831	624
M24 x 3.00	ft-lb	543	407	776	582
	Nm	736	552	1052	789
M27 x 3.00	ft-lb	796	597	1139	854
	Nm	1079	809	1544	1158
M30 x 3.50	ft-lb	1079	809	1543	1158
	Nm	1463	1097	2092	1570
M33 x 3.50	ft-lb	1468	1101	2101	1576
	Nm	1990	1493	2849	2137
M36 x 4.00	ft-lb	1886	1415	2699	2024
	Nm	2557	1918	3659	2744

NOTE: Lubed includes lubricants such as lubrizing, oil, grease, and some uncured thread lockers. Refer to the specific thread locker manufacturer's instructions for specific torque adjustments.

1375AC

2.3 Torque specifications for fasteners (US)

When specific torque values are not provided within this manual for a task, use the torque values given in the table below.

Size	Torque Type	SAE 2		SAE 5		SAE 8	
		Dry	Lubed	Dry	Lubed	Dry	Lubed
4-40	(in-lb)	(5)	(4)	(8)	(6)	(12)	(9)
	Nm	0.6	0.5	0.9	0.7	1.4	1.0
4-48	(in-lb)	(6)	(5)	(9)	(7)	(13)	(10)
	Nm	0.7	0.6	1.0	0.8	1.5	1.1
6-32	(in-lb)	(10)	(8)	(16)	(12)	(23)	(17)
	Nm	1.1	0.9	1.8	1.4	2.6	1.9
6-40	(in-lb)	(12)	(9)	(18)	(13)	(25)	(19)
	Nm	1.4	1.0	2.0	1.5	2.8	2.1
8-32	(in-lb)	(19)	(14)	(30)	(22)	(41)	(31)
	Nm	2.1	1.6	3.4	2.5	4.6	3.5
8-36	(in-lb)	(20)	(15)	(31)	(23)	(43)	(32)
	Nm	2.3	1.7	3.5	2.6	4.9	3.6
10-24	(in-lb)	(27)	(21)	(43)	(32)	(60)	(45)
	Nm	3.1	2.4	4.9	3.6	6.8	5.1
10-32	(in-lb)	(31)	(23)	(49)	(36)	(68)	(51)
	Nm	3.5	2.6	5.5	4.1	7.7	5.8
1/4-20	(in-lb) ft-lb	(66)	(50)	8	(75)	12	9
	Nm	7.5	5.6	11	8.5	16	12
1/4-28	(in-lb) ft-lb	(76)	(56)	10	(86)	14	10
	Nm	8.6	6.3	14	9.7	19	14
5/16-18	ft-lb	11	8	17	13	25	18
	Nm	15	11	23	18	34	24
5/16-24	ft-lb	12	9	19	14	25	20
	Nm	16	12	26	19	34	27
3/8-16	ft-lb	20	15	30	23	45	35
	Nm	27	20	41	31	61	47
3/8-24	ft-lb	23	17	35	25	50	35
	Nm	31	23	47	34	68	47
7/16-14	ft-lb	32	24	50	35	70	55
	Nm	43	33	68	47	95	75
7/16-20	ft-lb	36	27	55	40	80	60
	Nm	49	37	75	54	108	81
1/2-13	ft-lb	50	35	75	55	110	80
	Nm	68	47	102	75	149	108
1/2-20	ft-lb	55	40	90	65	120	90
	Nm	75	54	122	88	163	122

Size	Torque Type	SAE 2		SAE 5		SAE 8	
		Dry	Lubed	Dry	Lubed	Dry	Lubed
9/16-12	ft-lb	70	55	110	80	150	110
	Nm	95	75	149	108	203	149
9/16-18	ft-lb	80	60	120	90	170	130
	Nm	108	81	163	122	230	176
5/8-11	ft-lb	100	75	150	110	220	170
	Nm	136	102	203	149	298	230
5/8-18	ft-lb	110	85	180	130	240	180
	Nm	149	115	244	176	325	244
3/4-10	ft-lb	175	130	260	200	380	280
	Nm	237	176	353	271	515	380
3/4-16	ft-lb	200	150	300	220	420	320
	Nm	271	203	407	298	569	434
7/8-9	ft-lb	170	125	430	320	600	460
	Nm	230	169	583	434	813	624
7/8-14	ft-lb	180	140	470	360	660	500
	Nm	244	190	637	488	895	678
1-8	ft-lb	250	190	640	480	900	680
	Nm	339	258	868	651	1220	922
1-12	ft-lb	270	210	710	530	1000	740
	Nm	366	285	963	719	1356	1003
1-14	ft-lb	280	210	730	540	1020	760
	Nm	380	285	990	732	1383	1030
1 1/8-7	ft-lb	350	270	800	600	1280	960
	Nm	475	366	1085	813	1735	1302
1 1/8-12	ft-lb	400	300	880	660	1440	1080
	Nm	542	407	1193	895	1952	1464
1 1/4-7	ft-lb	500	380	1120	840	1820	1360
	Nm	678	515	1519	1139	2468	1844
1 1/4-12	ft-lb	550	420	1240	920	2000	1500
	Nm	746	569	1681	1247	2712	2034
1 3/8-6	ft-lb	670	490	1460	1100	2380	1780
	Nm	908	664	1979	1491	3227	2413
1 3/8-12	ft-lb	750	560	1680	1260	2720	2040
	Nm	1017	759	2278	1708	3688	2766
1 1/2-6	ft-lb	870	650	1940	1460	3160	2360
	Nm	1180	881	2630	1979	4284	3200
1 1/2-12	ft-lb	980	730	2200	1640	3560	2660
	Nm	1329	990	2983	2224	4827	3606

NOTE: *Lubed includes lubricants such as lubrizing, oil, grease, and some uncured thread lockers. Refer to the specific thread locker manufacturer's instructions for specific torque adjustments.* *1374AB*

2.4 Torque specifications for hydraulic couplings & hoses

Hydraulic Coupling Torque Chart O-Ring Port Connectors				
SAE Size	Steel Ports		Non-ferrous Ports	
	ft-lb	Nm	ft-lb	Nm
4	14-16	20-22	9-10	12-13
6	24-26	33-35	15-16	20-21
8	50-60	68-78	30-36	41-47
10	72-80	98-110	43-48	60-66
12	125-135	170-183	75-81	102-110
16	200-220	270-300	120-132	162-180
20	210-280	285-380	126-168	171-228
24	270-360	370-490	162-216	222-294
32	-	-	-	-

Hose End Torque Chart for JIC									
Size		Steel				Brass			
Dash	Frac.	ft-lb		Nm		ft-lb		Nm	
		Min.	Max.	Min.	Max.	Min.	Max.	Min.	Max.
-4	1/4"	10	11	13	15	5	6	6.75	9
-6	3/8"	17	19	23	26	12	15	17	20
-8	1/2"	34	38	47	52	20	24	27.66	33
-10	5/8"	50	56	69	76	34	40	46.33	55
-12	3/4"	70	78	96	106	53	60	72.33	82
-16	1"	94	104	127	141	74	82	100.5	111
-20	1 1/4"	124	138	169	188	75	83	101.5	113
-24	1 1/2	156	173	212	235	79	87	107	118
-32	2"	219	243	296	329	158	175	214	237

Hose End Torque Chart for Flat-Face O-Ring Seal (Steel)					
Size		Torque Specification			
Dash	Frac.	ft-lb		Nm	
		Min.	Max.	Min.	Max.
-4	1/4"	10	12	14	16
-6	3/8"	18	20	24	27
-8	1/2"	32	40	43	54
-10	5/8"	46	56	60	75
-12	3/4"	65	80	90	110
-14	1"	65	80	90	110
-16	1 1/4"	92	105	125	240
-20	1 1/2	125	140	170	190
-24	2"	150	180	200	245

1276AA

Table 2.5 Torque specifications for cartridges and coils

	Cartridges						Coils
Valve Size	**8**	**38**	**58**	**10**	**12**	**16**	**All coil sizes**
Torque (ft-lb) max	20	20	20	25	35	50	4 to 5
Torque (in-lb) max	240	240	240	300	420	600	48 to 60
Torque (Nm) max	27	27	27	34	47	68	5 to 6.5

Additional torque specifications may be found in Section 5. *2301AA*

2.6 MEWP torque specifications

Location	Description	Torque	
Platform			
Platform control box cover bolts	SCREW, Socket head cap (1/4"-20 x 2")	3.3-4 Nm	30-36 in-lb
Scissors			
Lift cylinder gland	GLAND, Lift cylinder	339 Nm	250 ft-lb
Base			
Wheel motor mounting bolts	BOLT, Hex head (3/8"-16 x 1-1/2" G8)	47 Nm	35 ft-lb
Front wheel castle nut*	NUT, Castle (1"-14)	68 Nm	50 ft-lb
Rear wheel castle nut*	NUT, Castle (1-1/8"-18)	203 Nm	150 ft-lb
Rotary sensor mounting bolts	SCREW, Round head machine (#8-32 x 1-1/4")	2.5 Nm	22 in-lb
Rotary sensor mounting bracket bolts	BOLT, Hex head (5/16"-18 x 5/8" G5)	17.6 Nm	13 ft-lb
ZAPI controller mounting bolts	BOLT, Button head cap (1/4"-20 x 3/4")	9.6 Nm	85 in-lb
ZAPI controller cable connection bolts	BOLT, Hex head (M6 x 1 x 20 CL8.8)	7 (±1.4) Nm	5.2 (±1) ft-lb
Hydraulic tank lid bolts	BOLT, Hex head (1/4"-20 x 1" G5)	4 Nm	36 in-lb
Contactor terminals	NUT, Hex (M8)	4-5 Nm	35-44 in-lb

**See section 5 for the full torque procedure.*

2293AB

2.7 Valve coil resistance

Description	Valve	Coil resistance Ω
Steer valve	4H-23A, 4H-24A	18-22
Lift valve	2H-14	25-30
Cylinder lowering/holding valve	2H-13 (-1, -2)	7-10
Manifold lowering valve (if equipped)	2H-13C	32-42

2302AA

2.8 Platform capacities

Model	Wind Rating		Total Platform Capacity		Extension Platform Capacity		Allowable Manual Side Force
SJ3220 E with Rollout Deck	Indoors	0 m/s	408 kg	2 persons	136 kg	1 person	400 N
	Outdoors	12.5 m/s		1 person			200 N
	Indoors	0 mph	900 lb	2 persons	300 lb	1 person	90 lbf
	Outdoors	28 mph		1 person			45 lbf
SJ3220 E with Powerdeck	Indoors	0 m/s	363 kg	2 persons	136 kg	1 person	400 N
	Outdoors	12.5 m/s		1 person			200 N
	Indoors	0 mph	800 lb	2 persons	300 lb	1 person	90 lbf
	Outdoors	28 mph		1 person			45 lbf
SJ3226 E	Indoors	0 m/s	227 kg	2 persons	113 kg	1 person	400 N
	Outdoors	12.5 m/s		1 person			200 N
	Indoors	0 mph	500 lb	2 persons	250 lb	1 person	90 lbf
	Outdoors	28 mph		1 person			45 lbf
SJ3232 E	Indoors	0 m/s	250 kg	2 persons	110 kg	1 person	400 N
	Outdoors	12.5 m/s		1 person			200 N
	Indoors	0 mph	540 lb	2 persons	250 lb	1 person	90 lbf
	Outdoors	28 mph		1 person			45 lbf
SJ4726 E	Indoors	0 m/s	454 kg	3 persons	136 kg	1 person	400 N
	Outdoors	12.5 m/s		1 person			200 N
	Indoors	0 mph	1000 lb	3 persons	300 lb	1 person	90 lbf
	Outdoors	28 mph		1 person			45 lbf
SJ4732 E	Indoors	0 m/s	318 kg	2 persons	113 kg	1 person	400 N
	Outdoors	12.5 m/s		1 person			200 N
	Indoors	0 mph	700 lb	2 persons	250 lb	1 person	90 lbf
	Outdoors	28 mph		1 person			45 lbf
SJ4740 E	Indoors	0 m/s	350 kg	3 persons	120 kg	1 person	400 N
	Outdoors	12.5 m/s		1 person			200 N
	Indoors	0 mph	770 lb	3 persons	265 lb	1 person	90 lbf
	Outdoors	28 mph		1 person			45 lbf

2253AC

2.9 Specifications & features - SJ3220 E with Rollout Deck

	SJ3220 E with a Rollout Deck	ANSI/CSA		CE	AS	KC
Dimensions	Working height	25' 6.25"	7.78 m	7.95 m	7.06 m	7.95 m
	Raised platform height	19' 6.25"	5.95 m	5.95 m	5.95 m	5.95 m
	Maximum drive height	19' 6.25"	5.95 m	5.95 m	5.95 m	5.95 m
	Stowed platform height	39.04"	0.99 m	0.99 m	0.99 m	0.99 m
	Stowed height (railings up)	82.85"	2.10 m	2.10 m	2.10 m	2.10 m
	Stowed height (railings down)	68.96"	1.75 m	1.75 m	1.75 m	1.75 m
	Railing height from platform	43.7"	1.11 m	1.11 m	1.11 m	1.11 m
	Midrail height from platform	21.92"	0.56 m	0.56 m	0.56 m	0.56 m
	Toeguard height from platform	5.91"	0.15 m	0.15 m	0.15 m	0.15 m
	Machine overall width	33.00"	0.84 m	0.84 m	0.84 m	0.84 m
	Machine overall length (platform retracted)	91.61"	2.33 m	2.33 m	2.33 m	2.33 m
	Machine overall length (platform extended)	124.81"	3.17 m	3.17 m	3.17 m	3.17 m
	Platform width inside railing	27.56"	0.70 m	0.70 m	0.70 m	0.70 m
	Platform width outside railing	30.21"	0.77 m	0.77 m	0.77 m	0.77 m
	Platform inside length (retracted)	82.75"	2.10 m	2.10 m	2.10 m	2.10 m
	Platform outside length (retracted)	85.91"	2.18 m	2.18 m	2.18 m	2.18 m
	Platform inside length (extended)	115.95"	2.95 m	2.95 m	2.95 m	2.95 m
	Platform outside length (extended)	119.1"	3.03 m	3.03 m	3.03 m	3.03 m
	Platform extension	33.30"	0.85 m	0.85 m	0.85 m	0.85 m
	Ground clearance - pothole raised	4.00"	0.10 m	0.10 m	0.10 m	0.10 m
	Ground clearance - pothole deployed	0.50"	0.01 m	0.01 m	0.01 m	0.01 m
	Wheel base	69.00"	1.75 m	1.75 m	1.75 m	1.75 m
	Wheel track width	28.02"	0.71 m	0.71 m	0.71 m	0.71 m
	Turn radius - inside wheel	42.81"	1.09 m	1.09 m	1.09 m	1.09 m
	Turn radius - outside wheel	103.95"	2.64 m	2.64 m	2.64 m	2.64 m
	Turn radius - outside base	106.96"	2.72 m	2.72 m	2.72 m	2.72 m
	Ladder height - ground to first step	15.66"	0.40 m	0.40 m	0.40 m	0.40 m
	Ladder height - ground to top step	27.30"	0.69 m	0.69 m	0.69 m	0.69 m
	Elevated drive speed trip height	82.00"	2.08 m	2.08 m	2.08 m	2.08 m
	Pothole drive cutout height	80.31"	2.04 m	2.04 m	2.04 m	2.04 m
	Armguard	N/A	N/A	1.96 m	N/A	N/A

2247AG

2.9 Specifications & features - SJ3220 E with Rollout Deck

	SJ3220 E with a Rollout Deck	ANSI/CSA		CE	AS	KC
Speed & Gradeability	Stowed drive speed	2.1 mph	3.38 km/h	3.38 km/h	3.38 km/h	3.38 km/h
	Elevated drive speed (maximum)	0.6 mph	0.97 km/h	0.97 km/h	0.97 km/h	0.97 km/h
	Lift time - with rated load	34 s		34 s	34 s	34 s
	Lift time - without load	29 s		29 s	29 s	29 s
	Lower time - with rated load	24 s		24 s	24 s	24 s
	Lower time - wothout load	32 s		34 s	32 s	32 s
	Gradeability torque equivalent to	25 %		25 %	25 %	25 %
Tilt	Tilt switch setting - front to rear	3.5°		3.5°	3.5°	3.5°
	Tilt switch setting - side to side	1.5°		1.5°	1.5°	1.5°
Attributes	System Pressure*	2050 psi (±150 psi)	141 bar (±10 bar)	141 bar (±10 bar)	141 bar (±10 bar)	141 bar (±10 bar)
	Hydraulic Oil Type	ATF Dexron III, Shell Naturelle HF-E 32				
	Hydraulic Tank Capacity	6.3 gal	24 L	24 L	24 L	24 L
	Battery Pack Voltage	24 V	24 V	24 V	24 V	24 V
	Overall Weight - “A” serial numbers	3917 lb	1776 kg	1776 kg	1776 kg	1776 kg
	Overall Weight - “C” serial numbers	---	---	1825 kg	1825 kg	1825 kg

**Refer to Section 5 for the adjustment procedure.*

2247AG

2.10 Specifications & features - SJ3220 E with Powerdeck

	SJ3220 E with a Powerdeck	ANSI/CSA	
Dimensions	Working height	25' 6.25"	7.78 m
	Raised platform height	19' 6.25"	5.95 m
	Maximum drive height	19' 6.25"	5.95 m
	Stowed platform height	39.04"	0.99 m
	Stowed height (railings up)	82.85"	2.10 m
	Stowed height (railings down)	68.96"	1.75 m
	Railing height from platform	43.7"	1.11 m
	Midrail height from platform	21.92"	0.56 m
	Toeguard height from platform	5.91"	0.15 m
	Machine overall width	33.00"	0.84 m
	Machine overall length (platform retracted)	93.46"	2.37 m
	Machine overall length (platform extended)	161.96"	4.11 m
	Platform width inside railing	27.56"	0.70 m
	Platform width outside railing	30.21"	0.77 m
	Platform inside length (retracted)	82.75"	2.10 m
	Platform outside length (retracted)	85.91"	2.18 m
	Platform inside length (extended)	151.97"	3.86 m
	Platform outside length (extended)	154.7"	3.93 m
	Platform extension	68.50"	1.74 m
	Ground clearance - pothole raised	4.00"	0.10 m
	Ground clearance - pothole deployed	0.50"	0.01 m
	Wheel base	69.00"	1.75 m
	Wheel track width	28.02"	0.71 m
	Turn radius - inside wheel	42.81"	1.09 m
	Turn radius - outside wheel	103.95"	2.64 m
	Turn radius - outside base	106.96"	2.72 m
	Ladder height - ground to first step	15.66"	0.40 m
	Ladder height - ground to top step	27.30"	0.69 m
	Elevated drive speed trip height	82.00"	2.08 m
	Pothole drive cutout height	80.31"	2.04 m
	Armguard	N/A	N/A

2248AF

2.10 Specifications & features - SJ3220 E with Powerdeck

	SJ3220 E with a Powerdeck	ANSI/CSA	
Speed & Gradeability	Stowed drive speed	2.1 mph	3.38 km/h
	Elevated drive speed (maximum)	0.6 mph	0.97 km/h
	Lift time - with rated load	32 s	
	Lift time - without load	27 s	
	Lower time - with rated load	22 s	
	Lower time - wothout load	29 s	
	Gradeability torque equivalent to	25%	
Tilt	Tilt switch setting - front to rear	3.5°	
	Tilt switch setting - side to side	1.5°	
Attributes	System Pressure*	2050 psi (±150 psi)	141 bar (±10 bar)
	Hydraulic Oil Type	ATF Dexron III, Shell Naturelle HF-E 32	
	Hydraulic Tank Capacity	6.3 gal	24 L
	Battery Pack Voltage	24 V	24 V
	Overall Weight	4318 lb	1958 kg

2.11 Specifications & features - SJ3226 E

	SJ3226 E	ANSI/CSA		CE	AS	KC
Dimensions	Working height	31' 7"	9.62 m	9.79 m	8.90 m	9.79 m
	Raised platform height	25' 7"	7.79 m	7.79 m	7.79 m	7.79 m
	Maximum drive height	25' 7"	7.79 m	7.79 m	7.79 m	7.79 m
	Stowed platform height	46.15"	1.17 m	1.17 m	1.17 m	1.17 m
	Stowed height (railings up)	90"	2.29 m	2.29 m	2.29 m	2.29 m
	Stowed height (railings down)	76"	1.93 m	1.93 m	1.93 m	1.93 m
	Railing height from platform	43.7"	1.11 m	1.11 m	1.11 m	1.11 m
	Midrail height from platform	21.92"	0.56 m	0.56 m	0.56 m	0.56 m
	Toeguard height from platform	5.91"	0.15 m	0.15 m	0.15 m	0.15 m
	Machine overall width	33"	0.84 m	0.84 m	0.84 m	0.84 m
	Machine overall length (platform retracted)	91.61"	2.33 m	2.33 m	2.33 m	2.33 m
	Machine overall length (platform extended)	124.81"	3.17 m	3.17 m	3.17 m	3.17 m
	Platform width inside railing	27.56"	0.70 m	0.70 m	0.70 m	0.70 m
	Platform width outside railing	30.21"	0.77 m	0.77 m	0.77 m	0.77 m
	Platform inside length (retracted)	82.75"	2.10 m	2.10 m	2.10 m	2.10 m
	Platform outside length (retracted)	85.91"	2.18 m	2.18 m	2.18 m	2.18 m
	Platform inside length (extended)	115.95"	2.95 m	2.95 m	2.95 m	2.95 m
	Platform outside length (extended)	119.1"	3.03 m	3.03 m	3.03 m	3.03 m
	Platform extension	33.3"	0.85 m	0.85 m	0.85 m	0.85 m
	Ground clearance - pothole raised	4"	0.10 m	0.10 m	0.10 m	0.10 m
	Ground clearance - pothole deployed	0.50"	0.01 m	0.01 m	0.01 m	0.01 m
	Wheel base	69"	1.75 m	1.75 m	1.75 m	1.75 m
	Wheel track width	28.02"	0.71 m	0.71 m	0.71 m	0.71 m
	Turn radius - inside wheel	42.81"	1.09 m	1.09 m	1.09 m	1.09 m
	Turn radius - outside wheel	103.95"	2.64 m	2.64 m	2.64 m	2.64 m
	Turn radius - outside base	106.96"	2.72 m	2.72 m	2.72 m	2.72 m
	Ladder height - ground to first step	15.66"	0.40 m	0.40 m	0.40 m	0.40 m
	Ladder height - ground to top step	35.85"	0.91 m	0.91 m	0.91 m	0.91 m
	Elevated drive speed trip height	82"	2.08 m	2.08 m	2.08 m	2.08 m
	Pothole drive cutout height	100"	2.54 m	2.54 m	2.54 m	2.54 m
	Armguard	N/A	N/A	1.80 m	N/A	N/A

2249AF

2.11 Specifications & features - SJ3226 E

	SJ3226 E	ANSI/CSA		CE	AS	KC
Speed & Gradeability	Stowed drive speed	2.1 mph	0.97 km/h	0.97 km/h	0.97 km/h	0.97 km/h
	Elevated drive speed (maximum)	0.6 mph	3.38 km/h	3.38 km/h	3.38 km/h	3.38 km/h
	Lift time - with rated load	55 s		55 s	55 s	55 s
	Lift time - without load	52 s		52 s	52 s	52 s
	Lower time - with rated load	55 s		30 s	55 s	55 s
	Lower time - wothout load	65 s		35 s	65 s	65 s
	Gradeability torque equivalent to	25 %		25%	25%	25%
Tilt	Tilt switch setting - front to rear	3.5°		3.5°	3.5°	3.5°
	Tilt switch setting - side to side	1.5°		1.5°	1.5°	1.5°
Attributes	System Pressure*	1300 psi (±150 psi)	90 bar (±10 bar)	90 bar (±10 bar)	90 bar (±10 bar)	90 bar (±10 bar)
	Hydraulic Oil Type	ATF Dexron III, Shell Naturelle HF-E 32				
	Hydraulic Tank Capacity	6.3 gal	24 L	24 L	24 L	24 L
	Battery Pack Voltage	24 V	24 V	24 V	24 V	24 V
	Overall Weight - “A” serial numbers	4200 lb	1905 kg	1905 kg	1905 kg	1905 kg
	Overall Weight - “C” serial numbers	4310 lb	1955 kg	1955 kg	1955 kg	1955 kg

**Refer to Section 5 for the adjustment procedure.* *2249AF*

2.12 Specifications & features - SJ3232 E

	SJ3232 E	ANSI/CSA		CE
Dimensions	Working height	37' 6"	11.43 m	11.60 m
	Raised platform height - indoor	31' 6"	9.6 m	9.6 m
	Raised platform height - outdoor	23' 6"	7.16 m	7.16 m
	Maximum drive height - indoor	31' 6"	9.6 m	9.6 m
	Maximum drive height - outdoor	23' 6"	7.16 m	7.16 m
	Stowed platform height	51"	1.30 m	1.30 m
	Stowed height (railings up)	94"	2.39 m	2.39 m
	Stowed height (railings down)	79.5"	2.02 m	2.02 m
	Railing height from platform	43.7"	1.11 m	1.11 m
	Midrail height from platform	21.92"	0.56 m	0.56 m
	Toeguard height from platform	5.91"	0.15 m	0.15 m
	Machine overall width	33"	0.84 m	0.84 m
	Machine overall length (platform retracted)	91.61"	2.33 m	2.33 m
	Machine overall length (platform extended)	124.81"	3.17 m	3.17 m
	Platform width inside railing	27.56"	0.70 m	0.70 m
	Platform width outside railing	30.21"	0.77 m	0.77 m
	Platform inside length (retracted)	82.75"	2.10 m	2.10 m
	Platform outside length (retracted)	85.91"	2.18 m	2.18 m
	Platform inside length (extended)	115.95"	2.95 m	2.95 m
	Platform outside length (extended)	119.1"	3.03 m	3.03 m
	Platform extension	35.625"	0.90 m	0.90 m
	Ground clearance - pothole raised	4"	0.10 m	0.10 m
	Ground clearance - pothole deployed	0.5"	0.01 m	0.01 m
	Wheel base	69"	1.75 m	1.75 m
	Wheel track width	28.02"	0.71 m	0.71 m
	Turn radius - inside wheel	42.81"	1.09 m	1.09 m
	Turn radius - outside wheel	103.95"	2.64 m	2.64 m
	Turn radius - outside base	106.96"	2.72 m	2.72 m
	Ladder height - ground to first step	15.66"	0.40 m	0.40 m
	Ladder height - ground to top step	38.33"	0.97 m	0.97 m
	Elevated drive speed trip height	89"	2.26 m	2.26 m
	Pothole drive cutout height	98"	2.49 m	2.49 m

2618AA

2.12 Specifications & features - SJ3232 E

	SJ3232 E	ANSI/CSA		CE
Speed & Gradeability	Stowed drive speed	2.0 mph	3.2 km/h	3.2 km/h
	Elevated drive speed (maximum)	0.5 mph	0.8 km/h	0.8 km/h
	Lift time - with rated load	60 s		60 s
	Lift time - without load	52 s		52 s
	Lower time - with rated load	47 s		45 s
	Lower time - wothout load	56 s		53 s
	Gradeability torque equivalent to rated load	25%		25%
	Gradeability torque equivalent to zero load	31%		31%
Tilt	Tilt switch setting - front to rear	3.5°		3.5°
	Tilt switch setting - side to side	1.5°		1.5°
Attributes	System pressure*	1300 psi	90 bar	90 bar
	Hydraulic oil type	ATF Dexron III, Shell Naturelle HF-E 32		
	Hydraulic tank capacity	6.3 gal	24 L	24 L
	Battery pack voltage	24 V	24 V	24 V
	Overall weight	5835 lb	2647 kg	2647 kg

**Refer to Section 5 for the adjustment procedure.* *2618AA*

2.13 Specifications & features - SJ4726 E

	SJ4726 E	ANSI/CSA		CE	AS	KC
Dimensions	Working height	31' 8"	9.65 m	9.82 m	8.93 m	9.82 m
	Raised platform height	25' 8"	7.82 m	7.82 m	7.82 m	7.82 m
	Maximum drive height	25' 8"	7.82 m	7.82 m	7.82 m	7.82 m
	Stowed platform height	46.16"	1.17 m	1.17 m	1.17 m	1.17 m
	Stowed height (railings up)	89.98"	2.29 m	2.29 m	2.29 m	2.29 m
	Stowed height (railings down)	74.84"	1.90 m	1.90 m	1.90 m	1.90 m
	Railing height from platform	43.67"	1.11 m	1.11 m	1.11 m	1.11 m
	Midrail height from platform	21.92"	0.56 m	0.56 m	0.56 m	0.56 m
	Toeguard height from platform	5.98"	0.15 m	0.15 m	0.15 m	0.15 m
	Machine overall width	47.29"	1.20 m	1.20 m	1.20 m	1.20 m
	Machine overall length (platform retracted)	91.61"	2.33m	2.33m	2.33m	2.33m
	Machine overall length (platform extended)	136.51"	3.47 m	3.47 m	3.47 m	3.47 m
	Platform width inside railing	41.85"	1.06 m	1.06 m	1.06 m	1.06 m
	Platform width outside railing	44.46"	1.13 m	1.13 m	1.13 m	1.13 m
	Platform inside length (retracted)	82.75"	2.10 m	2.10 m	2.10 m	2.10 m
	Platform outside length (retracted)	86.47"	2.20 m	2.20 m	2.20 m	2.20 m
	Platform inside length (extended)	127.64"	3.24 m	3.24 m	3.24 m	3.24 m
	Platform outside length (extended)	131.37"	3.34 m	3.34 m	3.34 m	3.34 m
	Platform extension	44.86"	1.14 m	1.14 m	1.14 m	1.14 m
	Ground clearance - pothole raised	4.00"	0.10 m	0.10 m	0.10 m	0.10 m
	Ground clearance - pothole deployed	0.50"	0.01 m	0.01 m	0.01 m	0.01 m
	Wheel base	69.00"	1.75 m	1.75 m	1.75 m	1.75 m
	Wheel track width	42.37"	1.08 m	1.08 m	1.08 m	1.08 m
	Turn radius - inside wheel	28.40"	0.72 m	0.72 m	0.72 m	0.72 m
	Turn radius - outside wheel	103.95"	2.64 m	2.64 m	2.64 m	2.64 m
	Turn radius - outside base	107.01"	2.72 m	2.72 m	2.72 m	2.72 m
	Ladder height - ground to first step	15.66"	0.40 m	0.40 m	0.40 m	0.40 m
	Ladder height - ground to top step	35.86"	0.91 m	0.91 m	0.91 m	0.91 m
	Elevated drive speed trip height	84.00"	2.13 m	2.13 m	2.13 m	2.13 m
	Pothole drive cutout height	103.00"	2.62 m	2.62 m	2.62 m	2.62 m
	Armguard	N/A	N/A	1.83 m	N/A	N/A

2250AF

2.13 Specifications & features - SJ4726 E

	SJ4726 E	ANSI/CSA		CE	AS	KC
Speed & Gradeability	Stowed drive speed	2.1 mph	3.38 km/h	3.38 km/h	3.38 km/h	3.38 km/h
	Elevated drive speed (maximum)	0.6 mph	0.97 km/h	0.97 km/h	0.97 km/h	0.97 km/h
	Lift time - with rated load	60 s		60 s	60 s	60 s
	Lift time - without load	51 s		51 s	51 s	51 s
	Lower time - with rated load	43 s		32 s	43 s	43 s
	Lower time - wothout load	57 s		35 s	57 s	57 s
	Gradeability torque equivalent to	25 %		25%	25%	25%
Tilt	Tilt switch setting - front to rear	3.5°		3.5°	3.5°	3.5°
	Tilt switch setting - side to side	1.5°		1.5°	1.5°	1.5°
Attributes	System Pressure*	1800 psi (±150 psi)	124 bar (±10 bar)	124 bar (±10 bar)	124 bar (±10 bar)	124 bar (±10 bar)
	Hydraulic Oil Type	ATF Dexron III, Shell Naturelle HF-E 32				
	Hydraulic Tank Capacity	6.3 gal	24 L	24 L	24 L	24 L
	Battery Pack Voltage	24 V	24 V	24 V	24 V	24 V
	Overall Weight	4362 lb	1979 kg	1979 kg	1979 kg	1979 kg

**Refer to Section 5 for the adjustment procedure.*

2250AF

2.14 Specifications & features - SJ4726 E²

	SJ4726 E²	CE
Dimensions	Working height	9.82 m
	Raised platform height	7.82 m
	Maximum drive height	7.82 m
	Stowed platform height	1.17 m
	Stowed height (railings up)	2.29 m
	Stowed height (railings down)	1.90 m
	Railing height from platform	1.11 m
	Midrail height from platform	0.56 m
	Toeguard height from platform	0.15 m
	Machine overall width	1.20 m
	Machine overall length (platform retracted)	2.33m
	Machine overall length (platform extended)	3.47 m
	Platform width inside railing	1.06 m
	Platform width outside railing	1.13 m
	Platform inside length (retracted)	2.10 m
	Platform outside length (retracted)	2.20 m
	Platform inside length (extended)	3.24 m
	Platform outside length (extended)	3.34 m
	Platform extension	1.14 m
	Ground clearance - pothole raised	0.10 m
	Ground clearance - pothole deployed	0.01 m
	Wheel base	1.75 m
	Wheel track width	1.08 m
	Turn radius - inside wheel	0.72 m
	Turn radius - outside wheel	2.64 m
	Turn radius - outside base	2.72 m
	Ladder height - ground to first step	0.40 m
	Ladder height - ground to top step	0.91 m
	Elevated drive speed trip height	2.13 m
	Pothole drive cutout height	2.62 m
	Armguard	1.83 m

2634AA

2.14 Specifications & features - SJ4726 E²

	SJ4726 E²	CE
Speed & Gradeability	Stowed drive speed	3.38 km/h
	Elevated drive speed (maximum)	0.66 km/h
	Lift time - with rated load	60 s
	Lift time - without load	51 s
	Lower time - with rated load	32 s
	Lower time - wothout load	35 s
	Gradeability torque equivalent to	25%
Tilt	Tilt switch setting - front to rear	3.5°
	Tilt switch setting - side to side	1.5°
Attributes	System Pressure*	121 bar (±10 bar)
	Hydraulic Oil Type	ATF Dexron III, Shell Naturelle HF-E 32
	Hydraulic Tank Capacity	24 L
	Battery Pack Voltage	24 V
	Overall Weight	2510 kg

2634AA

2.15 Specifications & features - SJ4732 E

	SJ4732 E	ANSI/CSA		CE	AS	KC
Dimensions	Working height	37' 8"	11.48 m	11.65 m	10.75 m	11.65 m
	Raised platform height	31' 8"	9.65 m	9.65 m	9.65 m	9.65 m
	Maximum drive height	31' 8"	9.65 m	9.65 m	9.65 m	9.65 m
	Stowed platform height	49.78"	1.26 m	1.26 m	1.26 m	1.26 m
	Stowed height (railings up)	93.58"	2.38 m	2.38 m	2.38 m	2.38 m
	Stowed height (railings down)	78.45"	1.99 m	1.99 m	1.99 m	1.99 m
	Railing height from platform	43.67"	1.11 m	1.11 m	1.11 m	1.11 m
	Midrail height from platform	21.92"	0.56 m	0.56 m	0.56 m	0.56 m
	Toeguard height from platform	5.98"	0.15 m	0.15 m	0.15 m	0.15 m
	Machine overall width	47.29"	1.20 m	1.20 m	1.20 m	1.20 m
	Machine overall length (platform retracted)	91.61"	2.33 m	2.33 m	2.33 m	2.33 m
	Machine overall length (platform extended)	136.51"	3.47 m	3.47 m	3.47 m	3.47 m
	Platform width inside railing	41.85"	1.06 m	1.06 m	1.06 m	1.06 m
	Platform width outside railing	44.46"	1.13 m	1.13 m	1.13 m	1.13 m
	Platform inside length (retracted)	82.75"	2.10 m	2.10 m	2.10 m	2.10 m
	Platform outside length (retracted)	86.47"	2.20 m	2.20 m	2.20 m	2.20 m
	Platform inside length (extended)	127.64"	3.24 m	3.24 m	3.24 m	3.24 m
	Platform outside length (extended)	131.37"	3.34 m	3.34 m	3.34 m	3.34 m
	Platform extension	44.86"	1.14 m	1.14 m	1.14 m	1.14 m
	Ground clearance - pothole raised	4.00"	0.10 m	0.10 m	0.10 m	0.10 m
	Ground clearance - pothole deployed	0.50"	0.01 m	0.01 m	0.01 m	0.01 m
	Wheel base	69.00"	1.75 m	1.75 m	1.75 m	1.75 m
	Wheel track width	42.37"	1.08 m	1.08 m	1.08 m	1.08 m
	Turn radius - inside wheel	28.40"	0.72 m	0.72 m	0.72 m	0.72 m
	Turn radius - outside wheel	103.95"	2.64 m	2.64 m	2.64 m	2.64 m
	Turn radius - outside base	107.01"	2.72 m	2.72 m	2.72 m	2.72 m
	Ladder height - ground to first step	15.66"	0.40 m	0.40 m	0.40 m	0.40 m
	Ladder height - ground to top step	38.33"	0.97 m	0.97 m	0.97 m	0.97 m
	Elevated drive speed trip height	96.00"	2.44 m	2.44 m	2.44 m	2.44 m
	Pothole drive cutout height	120.87"	3.07 m	3.07 m	3.07 m	3.07 m
	Armguard	N/A	N/A	1.93 m	N/A	N/A

2251AE

2.15 Specifications & features - SJ4732 E

	SJ4732 E	ANSI/CSA		CE	AS	KC
Speed & Gradeability	Stowed drive speed	2.1 mph	3.38 km/h	3.38 km/h	3.38 km/h	3.38 km/h
	Elevated drive speed (maximum)	0.6 mph	0.97 km/h	0.97 km/h	0.97 km/h	0.97 km/h
	Lift time - with rated load	64 s		64 s	64 s	64 s
	Lift time - without load	60 s		60 s	60 s	60 s
	Lower time - with rated load	41 s		41 s	41 s	41 s
	Lower time - wothout load	50 s		50 s	50 s	50 s
	Gradeability torque equivalent to	25 %		25%	25%	25%
Tilt	Tilt switch setting - front to rear	3.5°		3.5°	3.5°	3.5°
	Tilt switch setting - side to side	1.5°		1.5°	1.5°	1.5°
Attributes	System Pressure*	1900 psi (±150 psi)	131 bar (±10 bar)	131 bar (±10 bar)	131 bar (±10 bar)	131 bar (±10 bar)
	Hydraulic Oil Type	ATF Dexron III, Shell Naturelle HF-E 32				
	Hydraulic Tank Capacity	6.3 gal	24 L	24 L	24 L	24 L
	Battery Pack Voltage	24 V	24 V	24 V	24 V	24 V
	Overall Weight	5478 lb	2485 kg	2485 kg	2485 kg	2485 kg

**Refer to Section 5 for the adjustment procedure.*

2251AE

2.16 Specifications & features - SJ4740 E

	SJ4740 E	ANSI/CSA		CE	AS	KC
Dimensions	Working height	44' 11"	13.69 m	13.86 m	12.98m	13.86 m
	Raised platform height	38' 11"	11.86 m	11.86 m	11.86 m	11.86 m
	Maximum drive height	38' 11"	11.86 m	11.86 m	11.86 m	11.86 m
	Stowed platform height	55.58"	1.41 m	1.41 m	1.41 m	1.41 m
	Stowed height (railings up)	99.53"	2.53 m	2.53 m	2.53 m	2.53 m
	Stowed height (railings down)	79.76"	2.03 m	2.03 m	2.03 m	2.03 m
	Railing height from platform	43.97"	1.12 m	1.12 m	1.12 m	1.12 m
	Midrail height from platform	21.00"	0.53 m	0.53 m	0.53 m	0.53 m
	Toeguard height from platform	6.00"	0.15 m	0.15 m	0.15 m	0.15 m
	Machine overall width	47.28"	1.20 m	1.20 m	1.20 m	1.20 m
	Machine overall length (platform retracted)	95.16"	2.41 m	2.41 m	2.41 m	2.41 m
	Machine overall length (platform extended)	130.65"	3.32 m	3.32 m	3.32 m	3.32 m
	Platform width inside railing	41.79"	1.06 m	1.06 m	1.06 m	1.06 m
	Platform width outside railing	45.48"	1.16 m	1.16 m	1.16 m	1.16 m
	Platform inside length (retracted)	86.21"	2.19 m	2.19 m	2.19 m	2.19 m
	Platform outside length (retracted)	89.49"	2.27 m	2.27 m	2.27 m	2.27 m
	Platform inside length (extended)	121.69"	3.09 m	3.09 m	3.09 m	3.09 m
	Platform outside length (extended)	124.97"	3.17 m	3.17 m	3.17 m	3.17 m
	Platform extension	35.48"	0.90 m	0.90 m	0.90 m	0.90 m
	Ground clearance - pothole raised	4.53"	0.11 m	0.11 m	0.11 m	0.11 m
	Ground clearance - pothole deployed	0.50"	0.01 m	0.01 m	0.01 m	0.01 m
	Wheel base	72.81"	1.85 m	1.85 m	1.85 m	1.85 m
	Wheel track width	42.36"	1.08 m	1.08 m	1.08 m	1.08 m
	Turn radius - inside wheel	31.10"	0.79 m	0.79 m	0.79 m	0.79 m
	Turn radius - outside wheel	109.50"	2.78 m	2.78 m	2.78 m	2.78 m
	Turn radius - outside base	114.00"	2.90 m	2.90 m	2.90 m	2.90 m
	Ladder height - ground to first step	14.57"	0.37 m	0.37 m	0.37 m	0.37 m
	Ladder height - ground to top step	45.32"	1.15 m	1.15 m	1.15 m	1.15 m
	Elevated drive speed trip height	96.00"	2.44 m	2.44 m	2.44 m	2.44 m
	Pothole drive cutout height	152.00"	3.86 m	3.86 m	3.86 m	3.86 m
	Armguard	N/A	N/A	2.59 m	N/A	N/A

2252AG

2.16 Specifications & features - SJ4740 E

	SJ4740 E	ANSI/CSA		CE	AS	KC
Speed & Gradeability	Stowed drive speed	1.95 mph	3.14 km/h	3.14 km/h	3.14 km/h	3.14 km/h
	Elevated drive speed (maximum)	0.5 mph	0.8 km/h	0.8 km/h	0.8 km/h	0.8 km/h
	Lift time - with rated load	88 s		88 s	88 s	88 s
	Lift time - without load	77 s		77 s	77 s	77 s
	Lower time - with rated load	53 s		53 s	53 s	53 s
	Lower time - wothout load	62 s		62 s	62 s	62 s
	Gradeability torque equivalent to	25 %		25%	25%	25%
Tilt	Tilt switch setting - front to rear	3.5°		3.5°	3.5°	3.5°
	Tilt switch setting - side to side	1.5°		1.5°	1.5°	1.5°
Attributes	System Pressure*	2000 psi (±150 psi)	138 bar (±10 bar)	138 bar (±10 bar)	138 bar (±10 bar)	138 bar (±10 bar)
	Hydraulic Oil Type	ATF Dexron III, Shell Naturelle HF-E 32				
	Hydraulic Tank Capacity	8 gal	30 L	30 L	30 L	30 L
	Battery Pack Voltage	24 V	24 V	24 V	24 V	24 V
	Overall Weight - “A” serial numbers	6470 lb	2935 kg	2935 kg	2935 kg	2935 kg
	Overall Weight - “C” serial numbers	---	---	2955 kg	2955 kg	2955 kg

**Refer to Section 5 for the adjustment procedure.*

2252AG

Notes

Section 3 – Component Identification and Schematics

Table 3.1 Electrical symbol chart

 CIRCUITS CROSSING NO CONNECTION	 HOURMETER	 KEY SWITCH	 LIMIT SWITCH N.O.
 CIRCUITS CONNECTED	 LIGHT	 FOOT SWITCH	 LIMIT SWITCH N.O. HELD CLOSED
 BATTERY	 HYDRAULIC VALVE COIL	 TOGGLE SWITCH	 LIMIT SWITCH N.C.
 GROUND	 PROPORTIONAL HYDRAULIC VALVE COIL	 PUSH BUTTON	 LIMIT SWITCH N.C. HELD OPEN
 FUSE	 ELECTRIC MOTOR	 ROTARY SWITCH	 SILICON CONTROLLED RECTIFIER
 CIRCUIT BREAKER	 HORN	 LIMIT SWITCH	 PROXIMITY SWITCH
 VOLT METER	 EMERGENCY STOP BUTTON	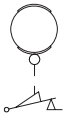 CAM OPERATED LIMIT SWITCH	 PNP TRANSISTOR
 CAPACITOR	RESISTOR	 TILT SWITCH	 NPN TRANSISTOR
 POTENTIOMETER	 LEVEL SENSOR	 SINGLE POLE SINGLE THROWN RELAY	 PRESSURE/ VACUUM SWITCH
 SINGLE POLE DOUBLE THROW RELAY	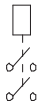 DOUBLE POLE SINGLE THROW RELAY	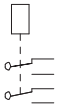 DOUBLE POLE DOUBLE THROW RELAY	 TEMPERATURE SWITCH
TRIPLE POLE DOUBLE THROW RELAY	DIODE	RHEOSTAT	

Table 3.2 Hydraulic symbol chart

 LINE CROSSING	 VARIABLE DISPLACEMENT PUMP	 SHUTTLE VALVE	 VELOCITY FUSE
 LINE JOINED	 HAND PUMP	 ACCUMULATOR, GAS CHARGED	 SINGLE ACTING CYLINDER
 HYDRAULIC TANK	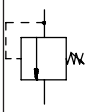 RELIEF VALVE	 CUSHION CYLINDER	 DOUBLE ACTING CYLINDER
 HYDRAULIC FILTER WITH BYPASS	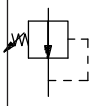 PRESSURE REDUCING VALVE	 PRESSURE SWITCH	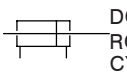 DOUBLE ACTING DOUBLE RODDED CYLINDER
 ELECTRIC MOTOR	 FIXED ORIFICE	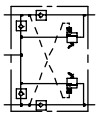 MOTION CONTROL VALVE	 SPRING APPLIED HYDRAULIC RELEASED BRAKE
 ENGINE	 ADJUSTABLE FLOW CONTROL	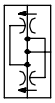 FLOW DIVIDER COMBINER	 BRAKE CYLINDER
 FIXED DISPLACEMENT PUMP	 CHECK VALVE	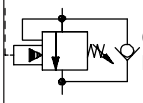 COUNTER BALANCE VALVE	 ROTARY ACTUATOR
 VARIABLE DISPLACEMENT HYDRAULIC MOTOR	 OIL COOLER	 VALVE COIL	 BI DIRECTIONAL HYDRAULIC MOTOR
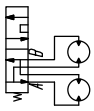 SERIES PARALLEL HYDRAULIC MOTOR	 TWO POSITION TWO WAY NORMALLY CLOSED VALVE	 TWO POSITION THREE WAY VALVE	 THREE POSITION FOUR WAY CLOSED CENTER OPEN PORT
 TWO POSITION TWO WAY NORMALLY OPEN VALVE	 TWO POSITION THREE WAY VALVE	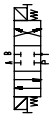 THREE POSITION FOUR WAY CLOSED CENTER CLOSED PORT	
 PRESSURE TRANSDUCER	MAIN LINES Solid	PILOT LINES Dashed	
SERVO			

3.3 Wire number and colour code

WIRE NO.	WIRE COLOR	WIRE NO.	WIRE COLOR	WIRE NO.	WIRE COLOR	WIRE NO.	WIRE COLOR	WIRE NO.	WIRE COLOR
00	WHT	21	GRN/BLK	42	PNK/BLU	84	YEL/BRN	1002	RED/BLK
000	WHT	21	WHT/RED	43	PNK/RED	85	ORG/BLK/WHT	1003	ORG
B1	BLU/PINK	22	ORG/BLU	44	PNK/ORG	87	BRN/ORG	1006	BLU
01	PUR/BLK	23	BLK/WHT/RED	49	GRN	88	BRN/PNK	1008	GRY
02	WHT	23	BLK/WHT	50	BRN/WHT	89	BRN/GRN	1100	BLK
03	GRN/PUR	24	BLU/BLK	55	GRY/RED	99	PUR/RED	1103	ORG
04	RED/YEL	25	ORG/GRN	56	WHT/ORG	100	RED	2001	BRN
05	PUR/BLACK	26	GRN	57	BLK/WHT	101		2002	RED
06		27	BLK	59	ORG/BLK	102	PNK	2005	GRN/WHT
07	RED	28	GRN/RED	60	BLK/RED/GRN	103	RED	3008	GRY
08	PUR/WHT	29	BLU/YEL	71	BLU/RED	103B	BLK	4002	RED
09	ORG/RED	30	BRN	72	WHT/BLK/RED	103C	WHT	7002	RED
10	BLU/WHT	31	RED/WHT	73	WHT/RED/GRN	104	RED		
11	YEL/BLK	32	GRN/BLK	74	BLK/RED/GRN	105	GRN		
12	BRN/RED	33		75	WHT/RED/GRN	106	BLU		
13	ORG	34	GRN/WHITE	76	RED/GRN	200	BLK/WHT		
14	BLK	35	RED/BRN	77	GRN/BLK/WHT	203	ORG/BLK		
15	BLU	36	YEL	78	RED/BLK/WHT	205	GRN		
16	WHT/BLK	37	GRN/WHT	79	YEL/PNK	209	WHT/BLK		
17	BLU/RED	38		80	YEL/PUR	900	WHT		
18	RED/BLK	39	GRN/WHT	81	YEL/RED	902	WHT		
19	ORG/BLK	40	PNK/YEL	82	YEL/BLU	910	BLK		
20	BLK/WHT/RED	41	PNK	83	YEL/ORG	1001	BRN/WHT		

This table is to be used as a wire number/color reference for electrical drawings and schematics.
All wire numbers will retain their original color coding, for example if wire 7 is red, wire 7A, 7B, and 7C will also be red.

3.4 Hydraulic parts list

Index No.	Skyjack Part No.	Qty.	Description
2H-13-1	248115	1	VALVE, Lower
2H-13-2	248115	1	VALVE, Upper
2H-13C	220950	1	VALVE, Lowering
3H-14	244026	1	VALVE, Lift
4H-23A	241128	1	VALVE & COIL ASSEMBLY, Steer right
4H-24A	241128	1	VALVE & COIL ASSEMBLY, Steer left
4H-26	113953	1	VALVE, Powerdeck
4H-27	113953	1	VALVE, Powerdeck
C1	162715	1	CYLINDER, Steering
C2	241131	1	CYLINDER, Lift - lower cylinder
C3	241131	1	CYLINDER, Lift - upper cylinder
C4	159239	1	CYLINDER, Powerdeck
F1	109568	1	FILTER, Return
MB1	241142	1	MANIFOLD, Main - ***SJ3220/26 E, SJ4726/32 E , SJ4740 E ANSI/CSA, AS, KC***
MB1	241143	1	MANIFOLD, Main - ***SJ3220 E, SJ4732 E, SJ4740 E CE***
MB1	241109	1	MANIFOLD, Main - ***SJ3226 E, SJ4726 E CE***
MB3	244686	1	MANIFOLD, Upper cylinder - ***SJ3220/26 E, SJ4726/32 E***
MB3	243617	1	MANIFOLD, Upper cylinder - ***SJ4740 E***
MB4	241944	1	MANIFOLD, Lower cylinder - ***SJ3220/26 E, SJ4726/32 E***
MB4	234842	1	MANIFOLD, Lower cylinder - ***SJ4740 E***
OR1	228015	1	ORIFICE, 0.081” - ***SJ3220/26 E, SJ4726/32 E***
OR1	228015	1	ORIFICE, 0.089” - ***SJ4740 E***
OR2	105811	1	ORIFICE, Steering 0.04”
P1	161936	1	PUMP, DC motor - ***standard***
P1	244249	1	PUMP, DC motor - ***EE rated***
RV1	244056	1	VALVE, Relief - main
RV3	244064	1	VALVE, Relief - scissor - ***SJ3220/26 E, SJ4726/32 E***
RV3	106557	1	VALVE, Relief - scissor - ***SJ4740 E***
RV4	244064	1	VALVE, Relief - scissor - ***SJ3220/26 E, SJ4726/32 E***
RV4	106557	1	VALVE, Relief - scissor - ***SJ4740 E***

3.5 Electrical parts list

Index No.	Skyjack Part No.	Qty.	Description
2H-13	159821	1	COIL, Lower
3H-14	244032	1	COIL, Lift
4H-23A	241128	1	VALVE & COIL ASSEMBLY, Steer right
4H-24A	241128	1	VALVE & COIL ASSEMBLY,, Steer left
29CR	127035	1	RELAY, 12V 40 amp - white noise
30ACR	243091	1	RELAY, 24 V 40 amp - brake
A1	236341	1	JOYSTICK
BP-29	170620	1	BEEPER, All-motion, tilt, overload
BP-29-1	240056	1	ALARM, White noise
C1	243679	1	MOTOR CONTACTOR
CB1	149780	1	CIRCUIT BREAKER, 10A - ***standard***
CB1	243826	1	CIRCUIT BREAKER, 4A - ***EE rated***
CB2	149780	1	CIRCUIT BREAKER, 10A - ***standard***
CB2	243826	1	CIRCUIT BREAKER, 4A - ***EE rated***
CB3	243827	1	CIRCUIT BREAKER, 4A
CM1	240701	1	CONTROLLER, ZAPI
D17R	234227	1	DIODE, 30 V 3 A - wheel motor
D17L	234227	1	DIODE, 30 V 3 A - wheel motor
F1	310517	1	FUSE, In-line battery - 300 A
F2	235012	1	FUSE, 1A - Elevate telematics (B+ wire)
F3	235012	1	FUSE, 1A - Elevate telematics (main harness)
FL-22	235775	1	LIGHT, Flashing
H1	146649	1	HORN
LS1	210226	1	LIMIT SWITCH, Pothole protection - battery side
LS2	210227	1	LIMIT SWITCH, Pothole protection - hydraulic side
M2	240465	1	MOTOR, Wheel - right
M3	240465	1	MOTOR, Wheel - left
PL-3	243057	1	LIGHT, Pilot - green - drive
PL-4	243057	1	LIGHT, Pilot - green - lift
PL-5	22884	1	LIGHT, Pilot - amber - battery charge
PS1	243095	1	POSITION SENSOR, Rotary
PT1	241130	1	PRESSURE TRANSDUCER - ***SJ3220 E, SJ4726 E, SJ4732 E, SJ4740 E***
PT1	240648	1	PRESSURE TRANSDUCER - ***SJ3226 E***
R1	163021	1	RESISTOR, 120 ohm 2 W - platform control box harness
R1	163253	1	RESISTOR, 1.2 K ohm
S1	210051	1	SWITCH, Main disconnect
S2	147069	1	SWITCH, Lift/lower
S3	102853	1	SWITCH, Lift/off/drive (INT1-7)
S4	147051	1	SWITCH, Emergency stop - platform
S8	147058	1	SWITCH, Horn
S10	149536	1	SWITCH, Key - ***ANSI/CSA***
S10	147057	1	SWITCH, Key - ***CE***
S22	243066	1	SWITCH, SGLE
S27	115574	1	SWITCH, Mid speed (INT1-2)

3.5 Electrical parts list

Index No.	Skyjack Part No.	Qty.	Description
S28	147051	1	SWITCH, Emergency stop - base
S28	147051	1	SWITCH, Emergency stop - base
TS1	171560	1	SENSOR, Tilt

3.6 Platform to base control cable

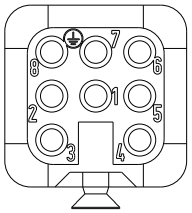

TO CONTROL BOX			
PIN	**WIRE**	***COLOUR A**	***COLOUR B**
PIN 1	07	BLACK	RED
PIN 2	08	BLACK	BLUE
PIN 3	N/U	N/U	N/U
PIN 4	00	BLACK	BLACK
PIN 5	CAN HI	BROWN	BROWN
PIN 6	CAN LO	WHITE	WHITE
PIN 7	N/U	N/U	N/U
PIN 8	DRAIN	DRAIN	DRAIN

**Note: Wire colours may vary*

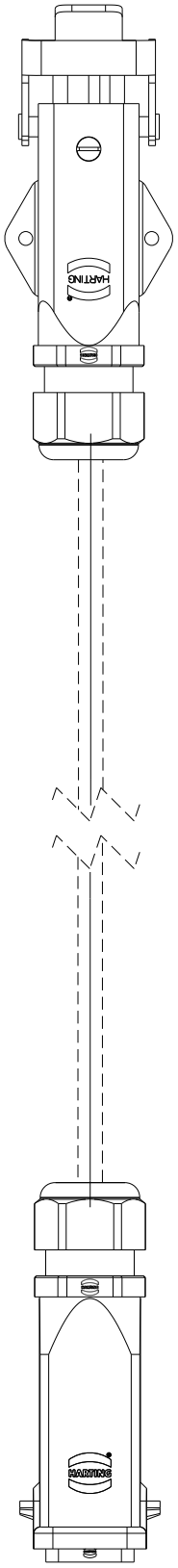

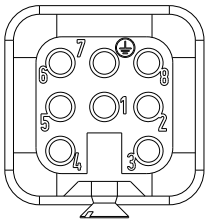

TO MAIN HARNESS			
PIN	**WIRE**	***COLOUR A**	***COLOUR B**
PIN 1	07	BLACK	RED
PIN 2	08	BLACK	BLUE
PIN 3	N/U	N/U	N/U
PIN 4	00	BLACK	BLACK
PIN 5	CAN HI	BROWN	BROWN
PIN 6	CAN LO	WHITE	WHITE
PIN 7	N/U	N/U	N/U
PIN 8	DRAIN	DRAIN	DRAIN

**Note: Wire colours may vary*

M240749AF

3.7 Base controls harness

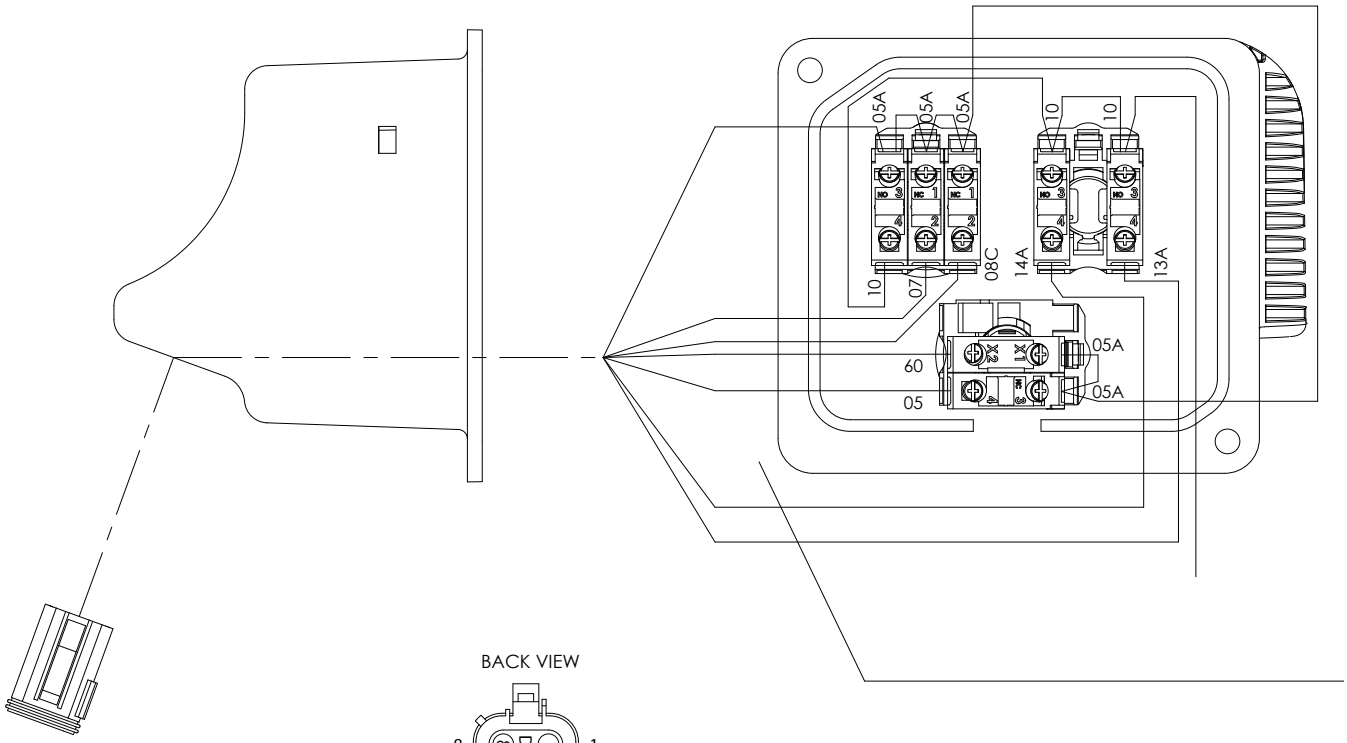

BACK VIEW

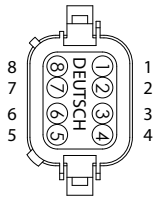

FROM BASE CONTROLS

CAVITY	CIRCUIT #	COLOUR
1	07	RED
2	05	PURPLE/BLACK
3	13A	ORANGE
4	14A	BLACK

SECTION **A-A**

CAVITY	CIRCUIT #	COLOUR
1	07	RED
2	05	PURPLE/BLACK
3	13A	ORANGE
4	14A	BLACK
5	10	BLUE/WHITE
6	08C	PURPLE/WHITE
7	05A	PURPLE/BLACK
8	60	BLACK/RED/GREEN

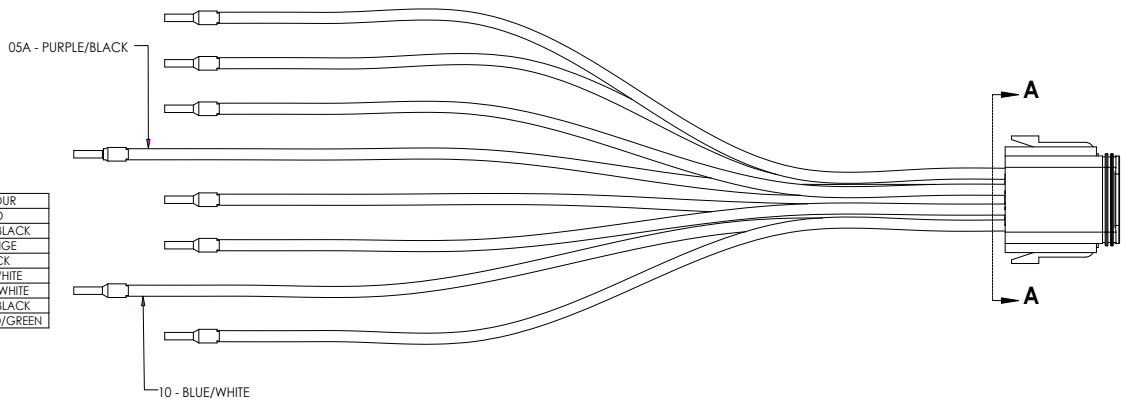

M240634AB-2, M240635AB

3.8 Brake release/E-lowering module

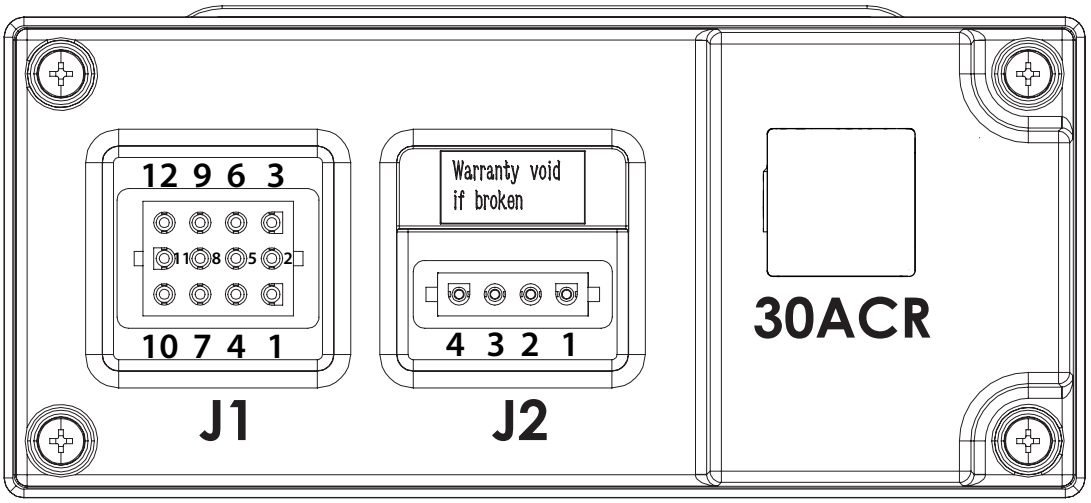

J1	
12 POLE FEMALE MATE-N-LOCK	
PIN 1	05
PIN 2	98B
PIN 3	13B
PIN 4	13
PIN 5	00C
PIN 6	00
PIN 7	30
PIN 8	08C
PIN 9	05A
PIN 10	30B
PIN 11	05C
PIN 12	N/U

J2	
4 POLE FEMALE MATE-N-LOCK	
PIN 1	00C
PIN 2	00C
PIN 3	13
PIN 4	13

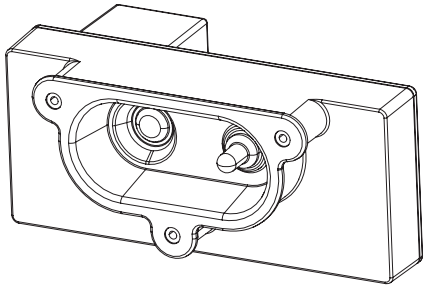

M243085AF-CV

3.9 Beeper

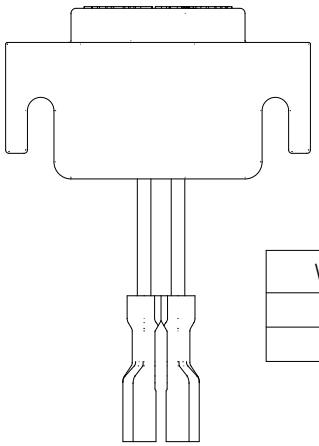

WIRE COLOUR	WIRE LABEL
RED	+
BLACK	-

M215817AD

3.10 Holding valve harness

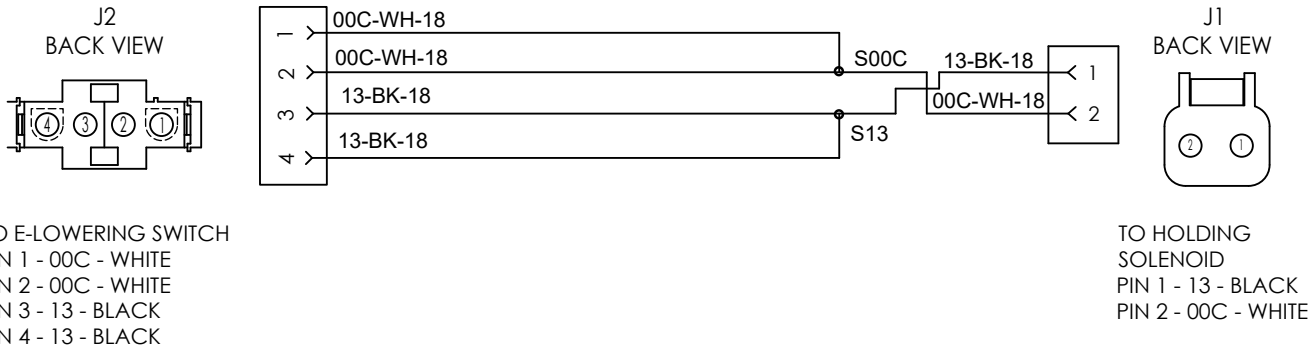

TO E-LOWERING SWITCH
PIN 1 - 00C - WHITE
PIN 2 - 00C - WHITE
PIN 3 - 13 - BLACK
PIN 4 - 13 - BLACK

TO HOLDING
SOLENOID
PIN 1 - 13 - BLACK
PIN 2 - 00C - WHITE

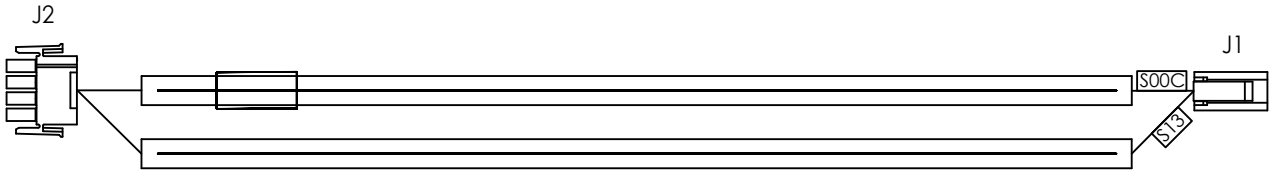

M240732AC-2

3.11 Pressure transducer harness



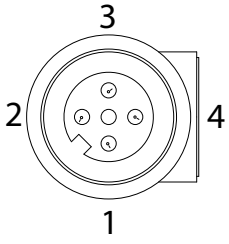

M12 CONNECTOR	MOLEX CONNECTOR	WIRE NUMBER	WIRE COLOUR
PIN 1	PIN 1	910	BROWN
PIN 2	NOT USED	-	-
PIN 3	PIN 3	902	BLUE
PIN 4	PIN 2	60A	BLACK

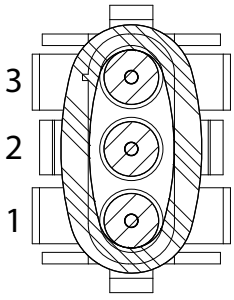

M246338AA-2

3.12 Drive motor harnesses

Right hand

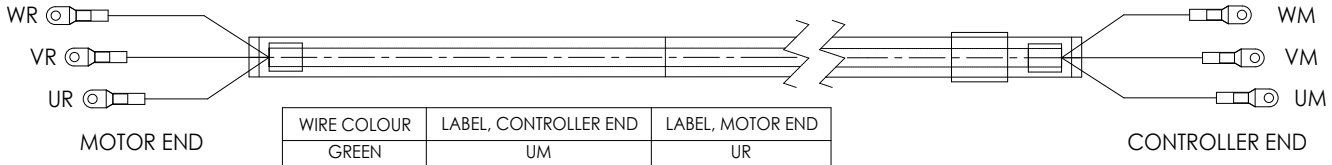

WIRE COLOUR	LABEL, CONTROLLER END	LABEL, MOTOR END
GREEN	UM	UR
WHITE	VM	VR
BLACK	WM	WR

Left hand

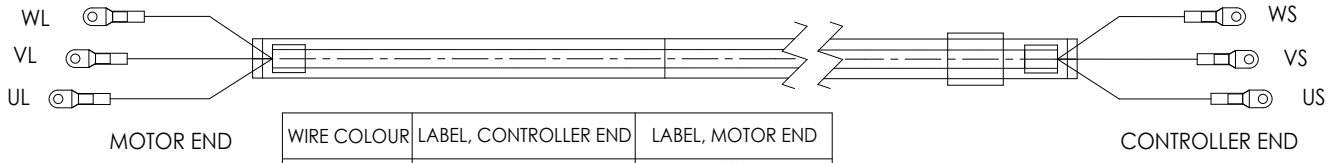

WIRE COLOUR	LABEL, CONTROLLER END	LABEL, MOTOR END
GREEN	US	UL
WHITE	VS	VL
BLACK	WS	WL

3.13 E-drive harness - KC

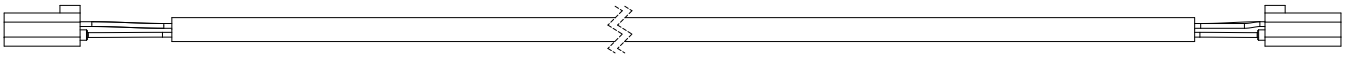

CONNECTION TABLE

CAVITY	COLOUR	LABEL
1	BLACK	08C
2	NOT USED	
3	WHITE	51A
4	GREEN	51

3.14 Anti-overrising jumper harness - KC

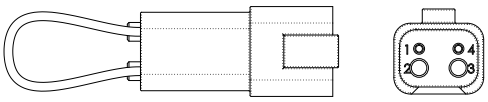

ID #	COLOUR	LABEL	TERMINATION
1	PURPLE/BLACK	01	MALE CONTACT PIN
2	NOT USED	-	-
3	NOT USED	-	-
4	PURPLE/BLACK	01	MALE CONTACT PIN

M246338AA-2, M246335AB-2, M228084AB_Service

3.16 Pothole protection limit switches

Hydraulic tray side - LS1

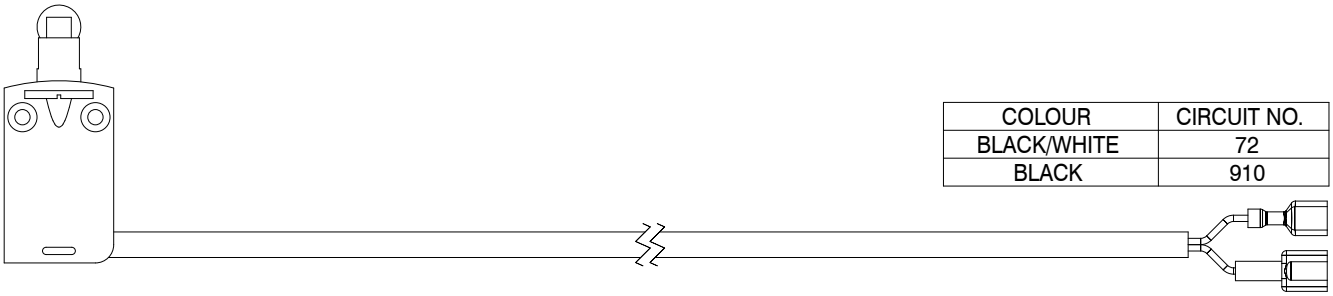

COLOUR	CIRCUIT NO.
BLACK/WHITE	72
BLACK	910

Battery tray side - LS2

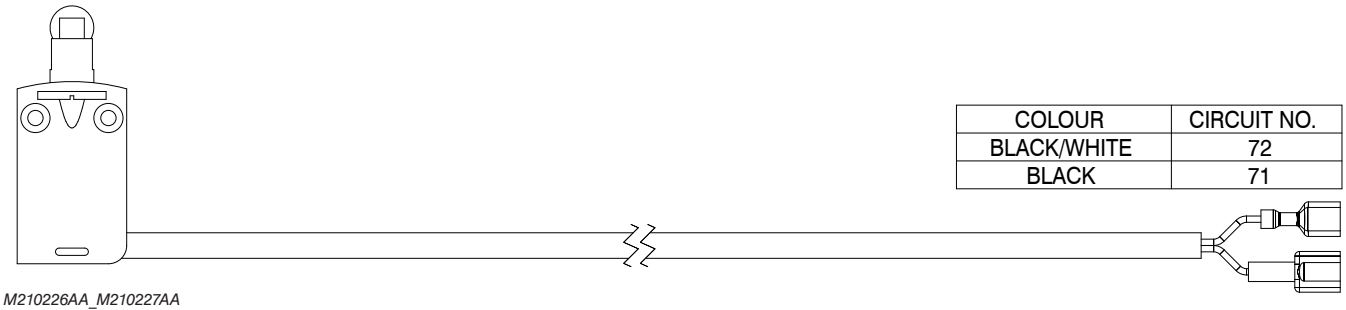

COLOUR	CIRCUIT NO.
BLACK/WHITE	72
BLACK	71

M210226AA_M210227AA

3.15 Battery management system (BMS) harness

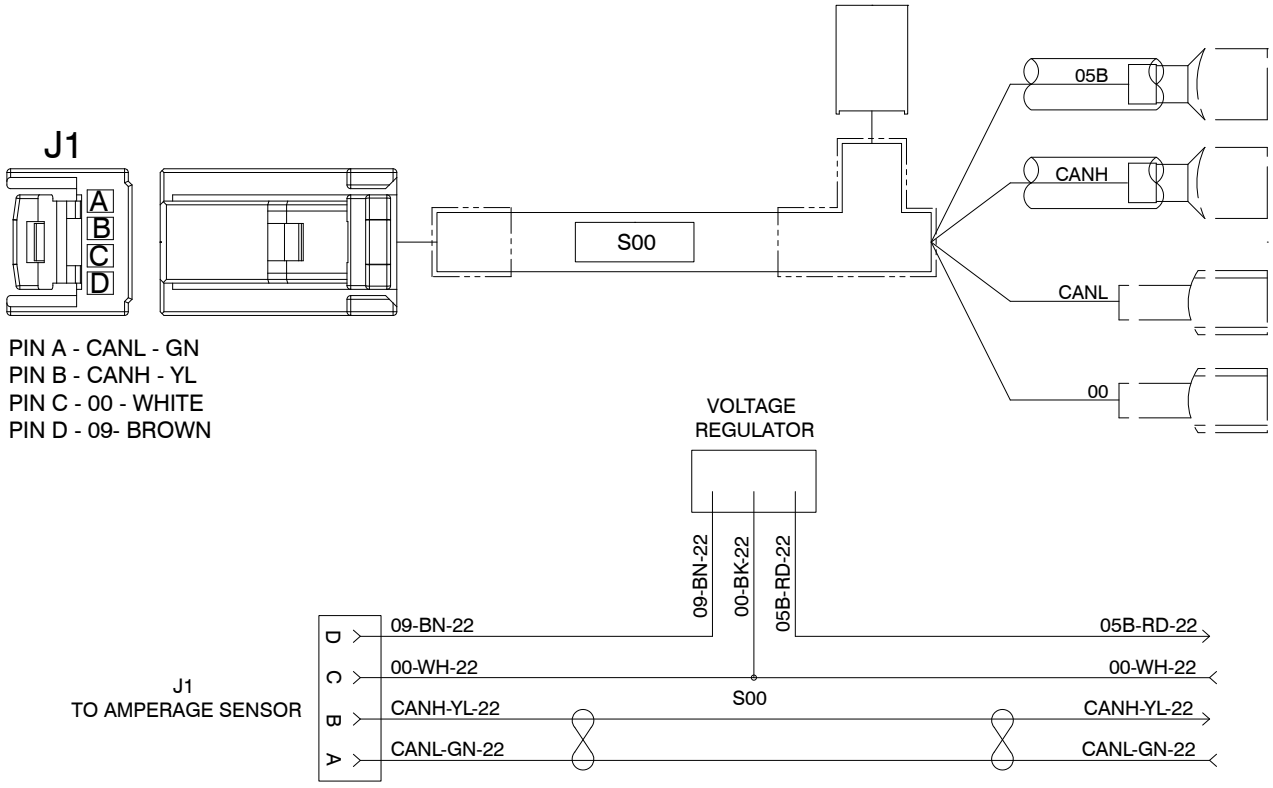

M230102AB

3.17 I/O expander harness

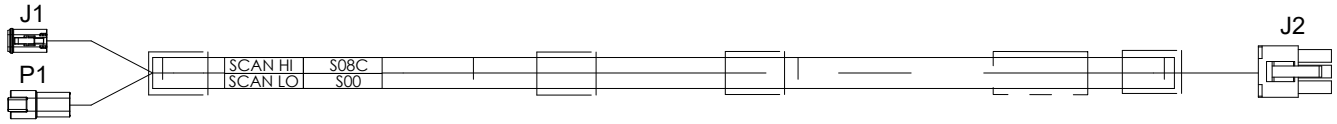

J1
BACK VIEW



TO DIAGNOSTICS

PIN 1 - CAN HI - YELLOW
PIN 2 - CAN LO - GREEN
PIN 3 - 00 - WHITE
PIN 4 - 19D-WHITE/RED
PIN 5 - 08C - PURPLE/WHITE
PIN 6 - N/U

P1
BACK VIEW



TO MAIN HARNESS

PIN 1 - CAN HI - YELLOW
PIN 2 - CAN LO - GREEN
PIN 3 - 00 - WHITE
PIN 4 - 19D-WHITE/RED
PIN 5 - 08C - PURPLE/WHITE
PIN 6 - N/U

J2
BACK VIEW



TO I/O EXPANDER PLUG "C"

PIN 1 - 08C - PURPLE/WHITE
PIN 2 - 08C - PURPLE/WHITE
PIN 3 - CAN LO - GREEN
PIN 4 - 00 - WHITE
PIN 5 - N/U
PIN 6 - CAN HI - YELLOW

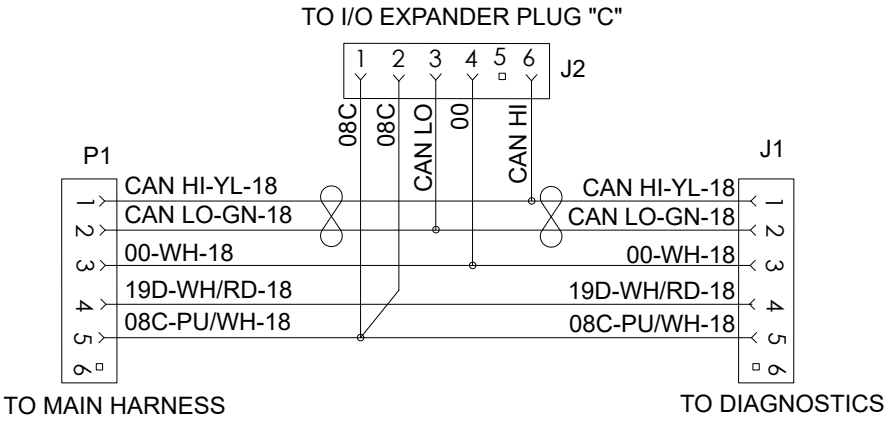

M243839AD

3.18 Powerdeck control box harness

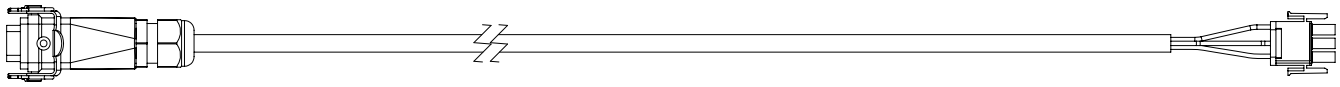

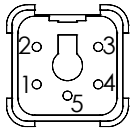

PIN NO.	COLOUR	LABEL NO.
1	BLACK	27
2	WHITE	08C
3	GREEN	26
4	N/A	N/A
5	N/A	N/A

CIRCUIT	COLOUR	TERMINAL	DESCRIPTION
26	GREEN	1	TO MAIN HARNESS
27	BLACK	2	
08C	WHITE	3	

M243835AB

3.19 Powerdeck valve harness

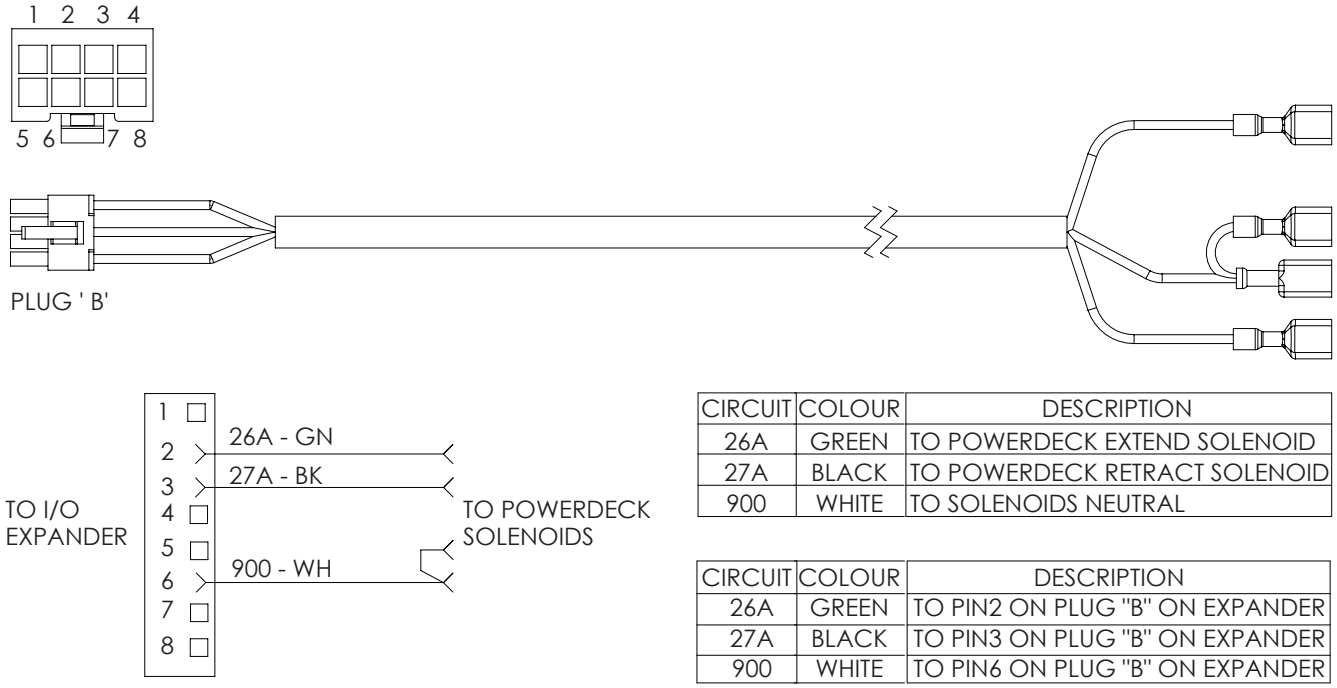

CIRCUIT	COLOUR	DESCRIPTION
26A	GREEN	TO POWERDECK EXTEND SOLENOID
27A	BLACK	TO POWERDECK RETRACT SOLENOID
900	WHITE	TO SOLENOIDS NEUTRAL

CIRCUIT	COLOUR	DESCRIPTION
26A	GREEN	TO PIN2 ON PLUG "B" ON EXPANDER
27A	BLACK	TO PIN3 ON PLUG "B" ON EXPANDER
900	WHITE	TO PIN6 ON PLUG "B" ON EXPANDER

M243836AC

3.20 Powerdeck control box wiring

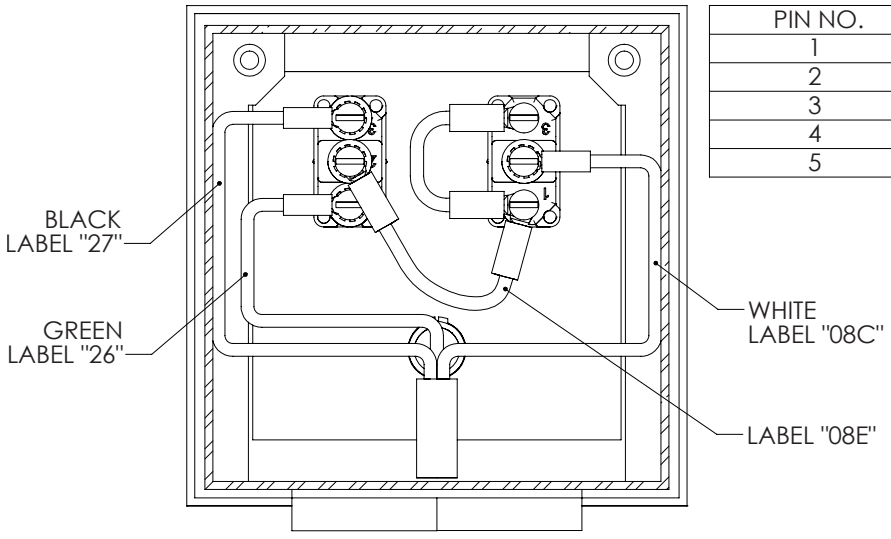

PIN NO.	COLOUR	LABEL NO.
1	BLACK	27
2	WHITE	08C
3	GREEN	26
4	N/A	N/A
5	N/A	N/A

M209556AD-2

3.21 Zapi controller wiring connections - SJ3220 E, SJ3226 E, SJ3232 E, SJ4726 E, SJ4732 E

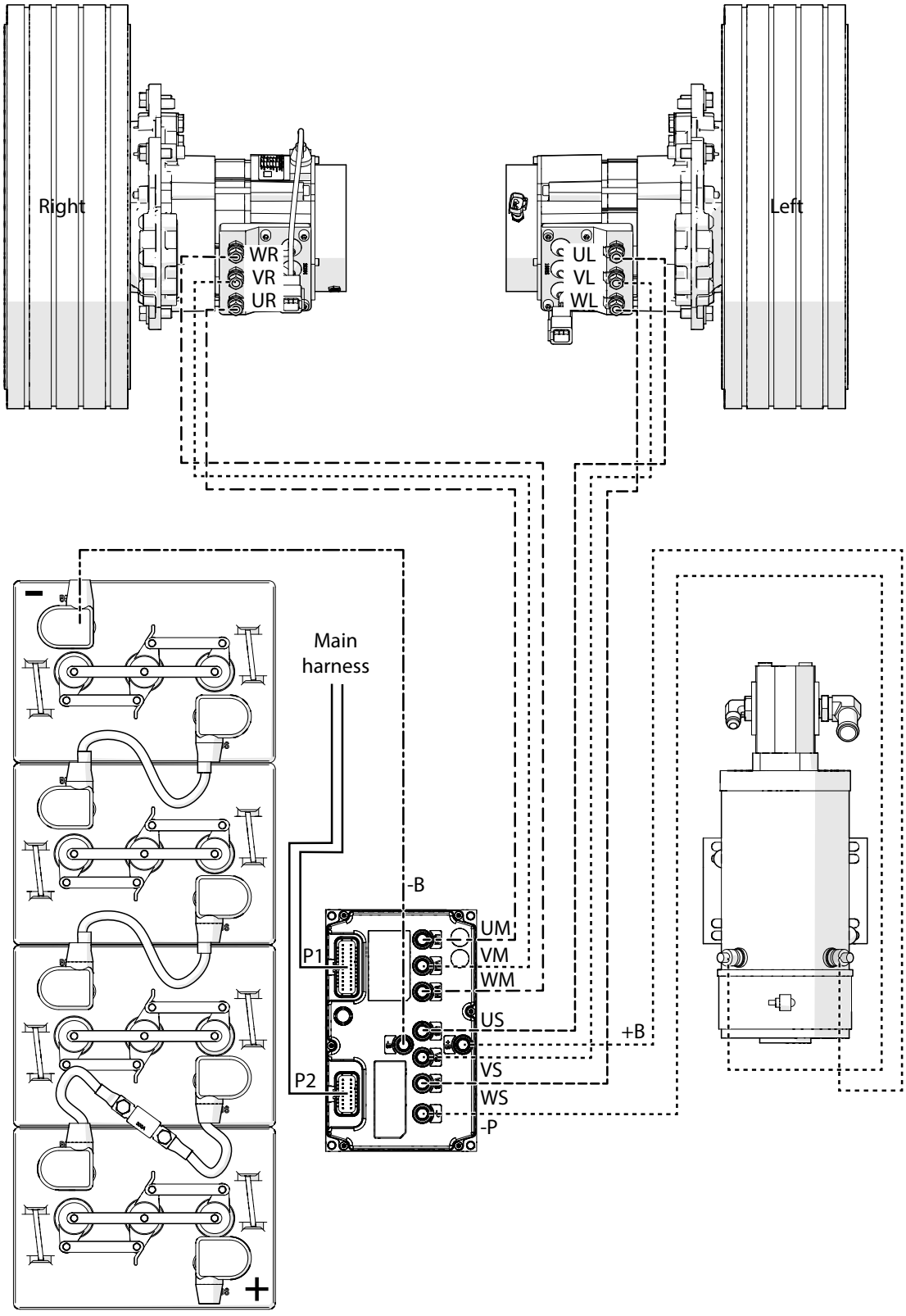

M71475AA

3.22 Zapi controller wiring connections - SJ4740 E

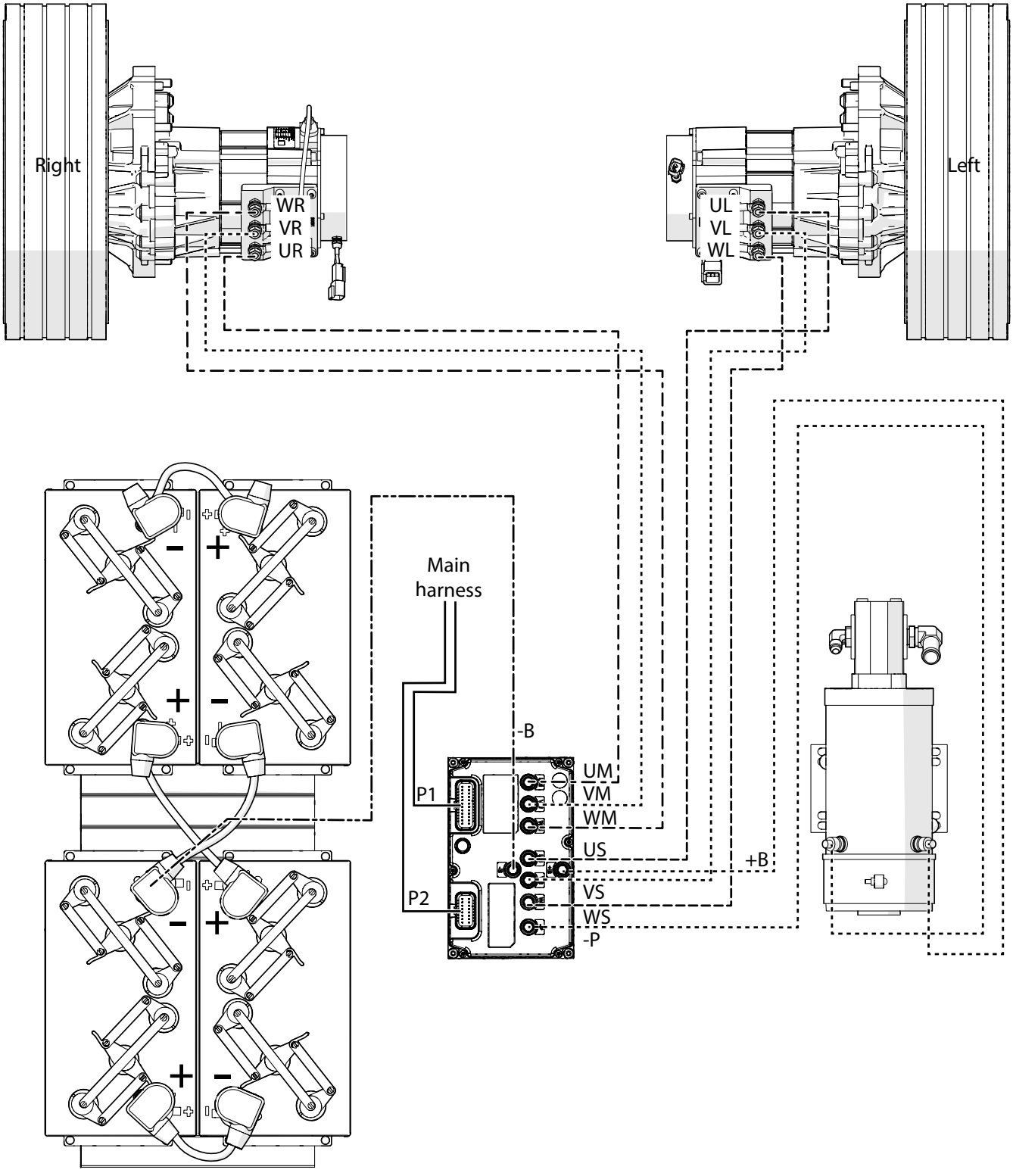

M71475AA

3.23 Battery wiring connections - SJ3220 E, SJ3226 E, SJ3232 E, SJ4726 E, SJ4732 E

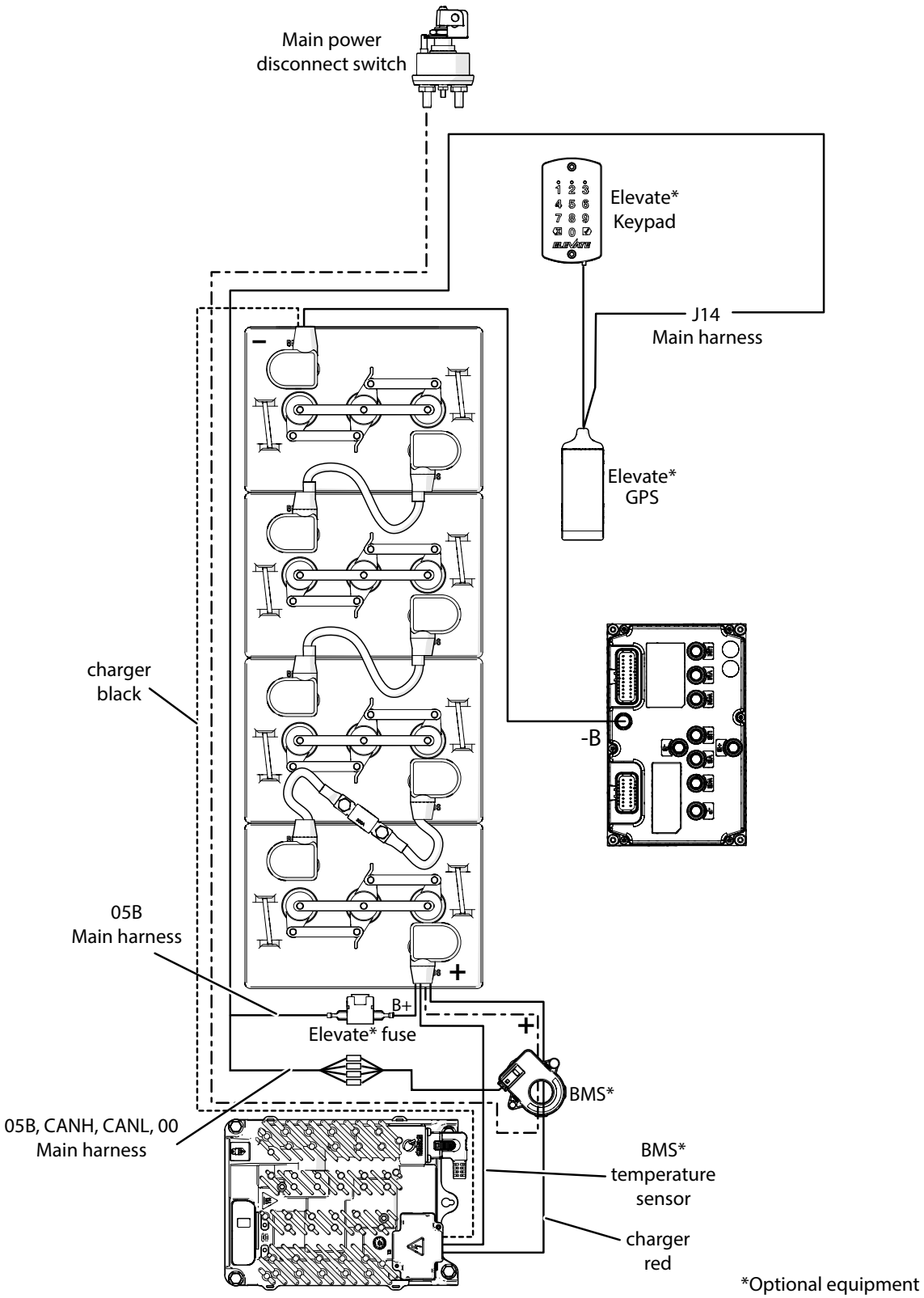

3.24 Battery wiring connections - SJ4740 E

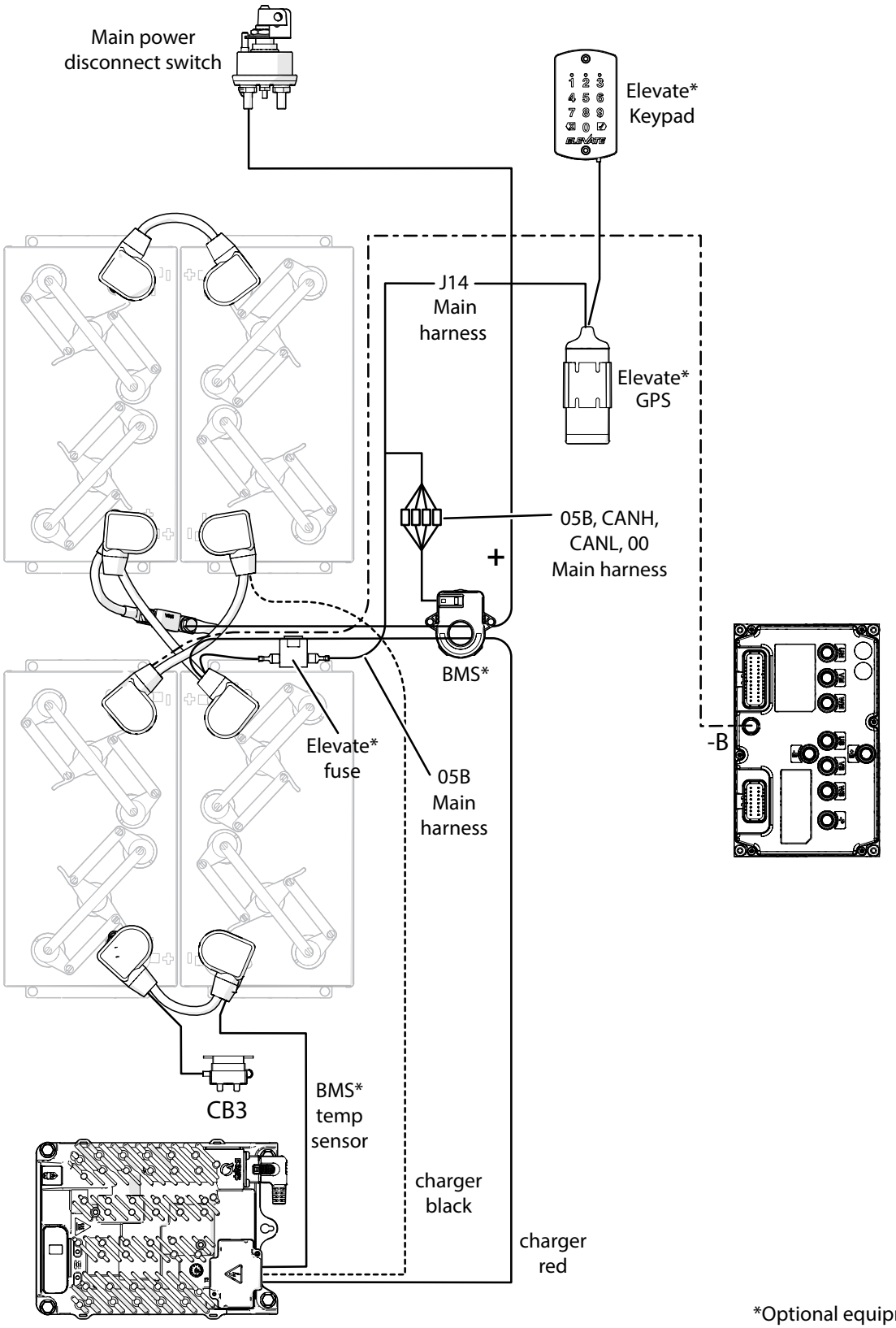

*Optional equipment

M71476AA

3.25 Main manifold

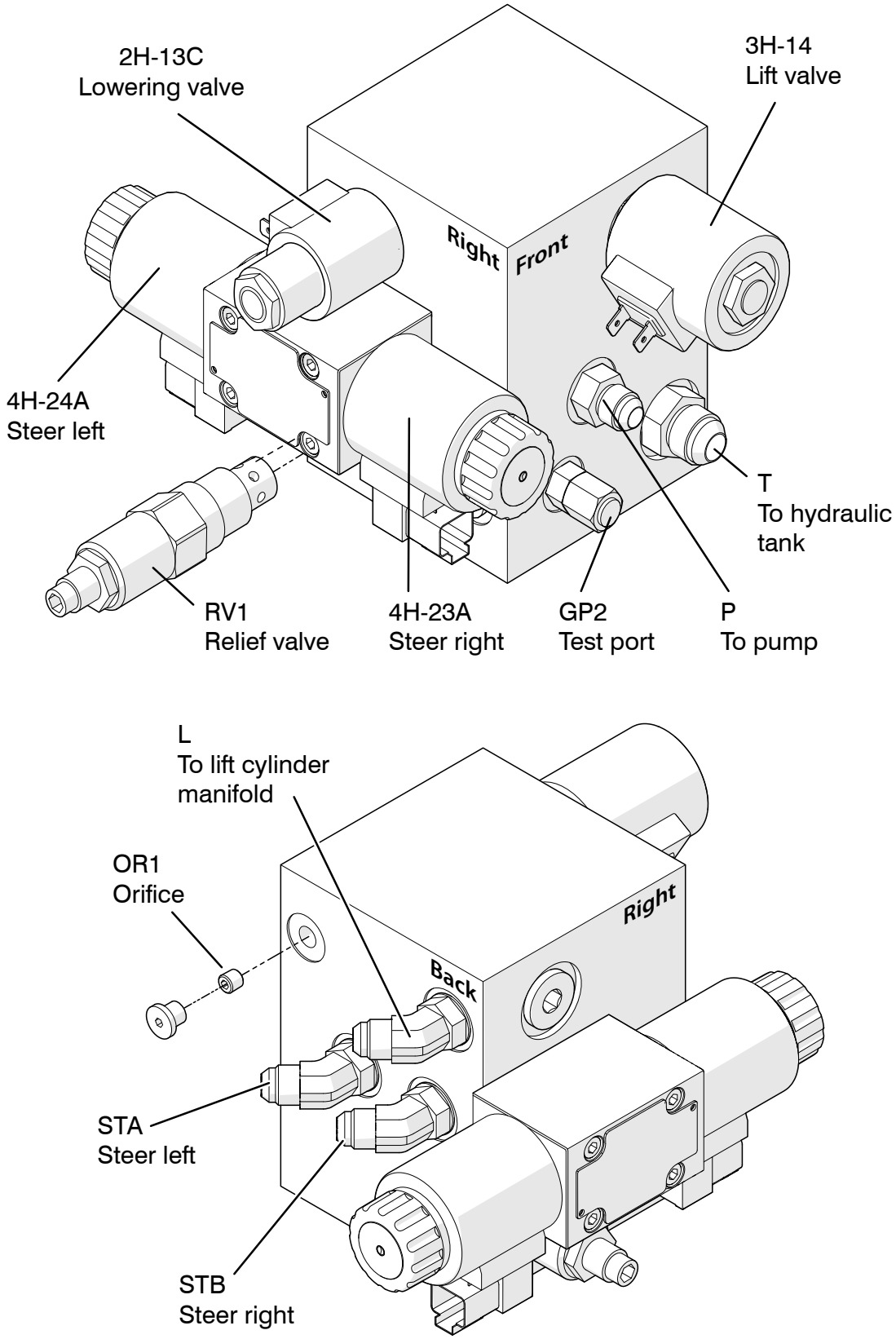

M243396AC-1

3.26 Powerdeck sandwich manifold

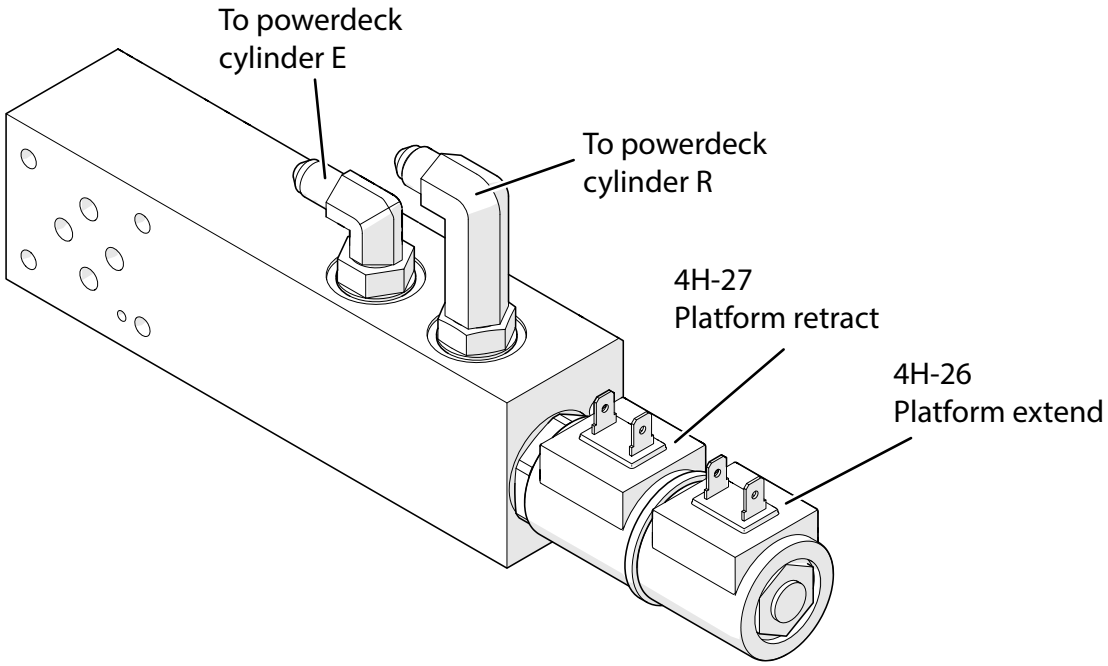

M245250AC-2

3.27 Lift cylinder manifold

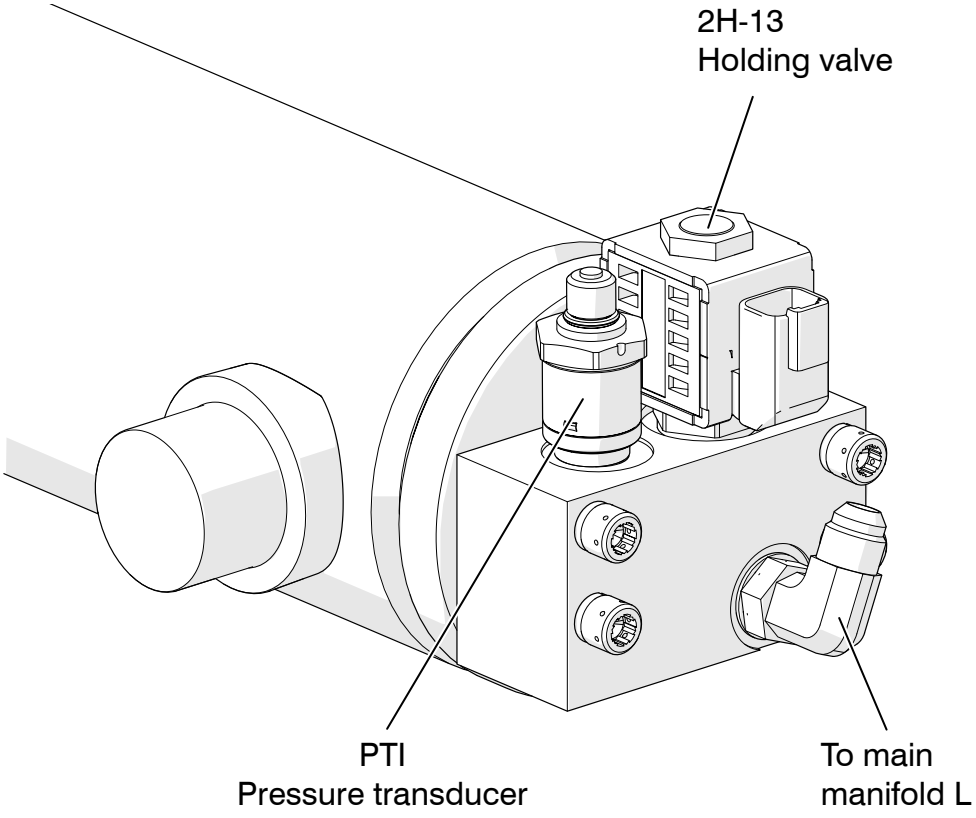

M240621AD_1

3.28 Hydraulic hose connections - SJ3220 E

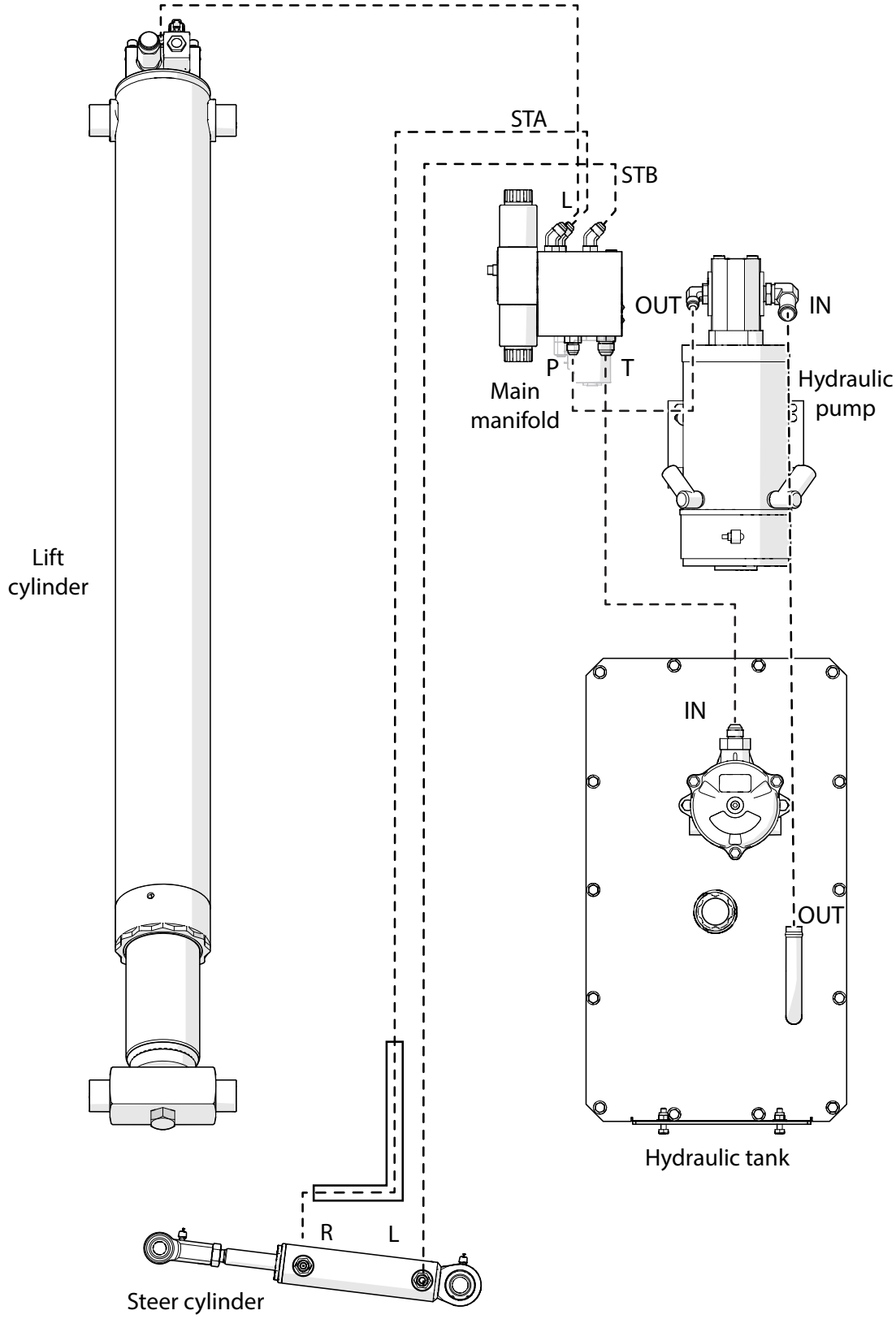

M240448AB_207168AG

3.29 Hydraulic hose connections - SJ3226 E, SJ3232E, SJ4726 E, SJ4732 E, SJ4740

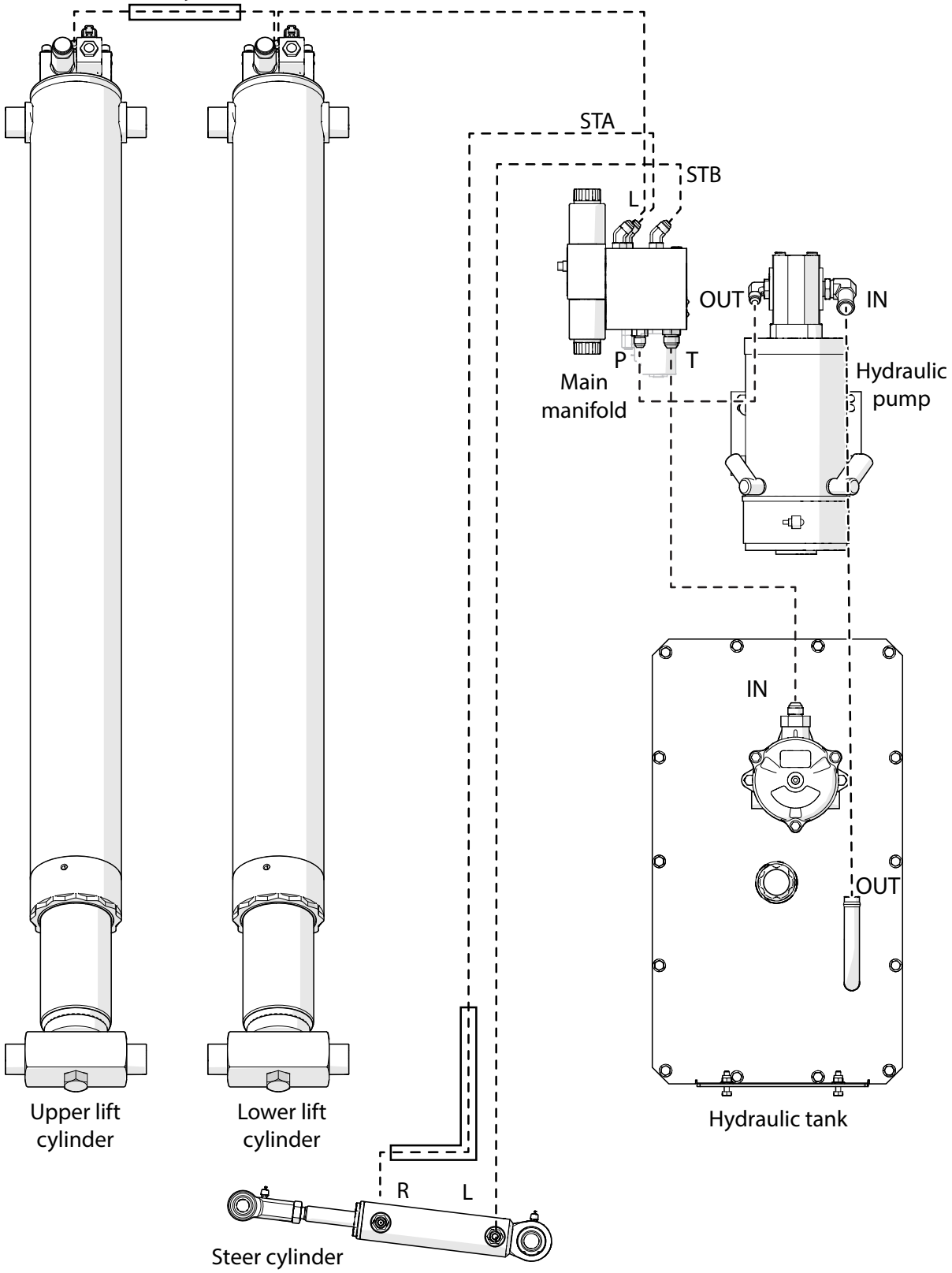

Notes

3.30 Major Components

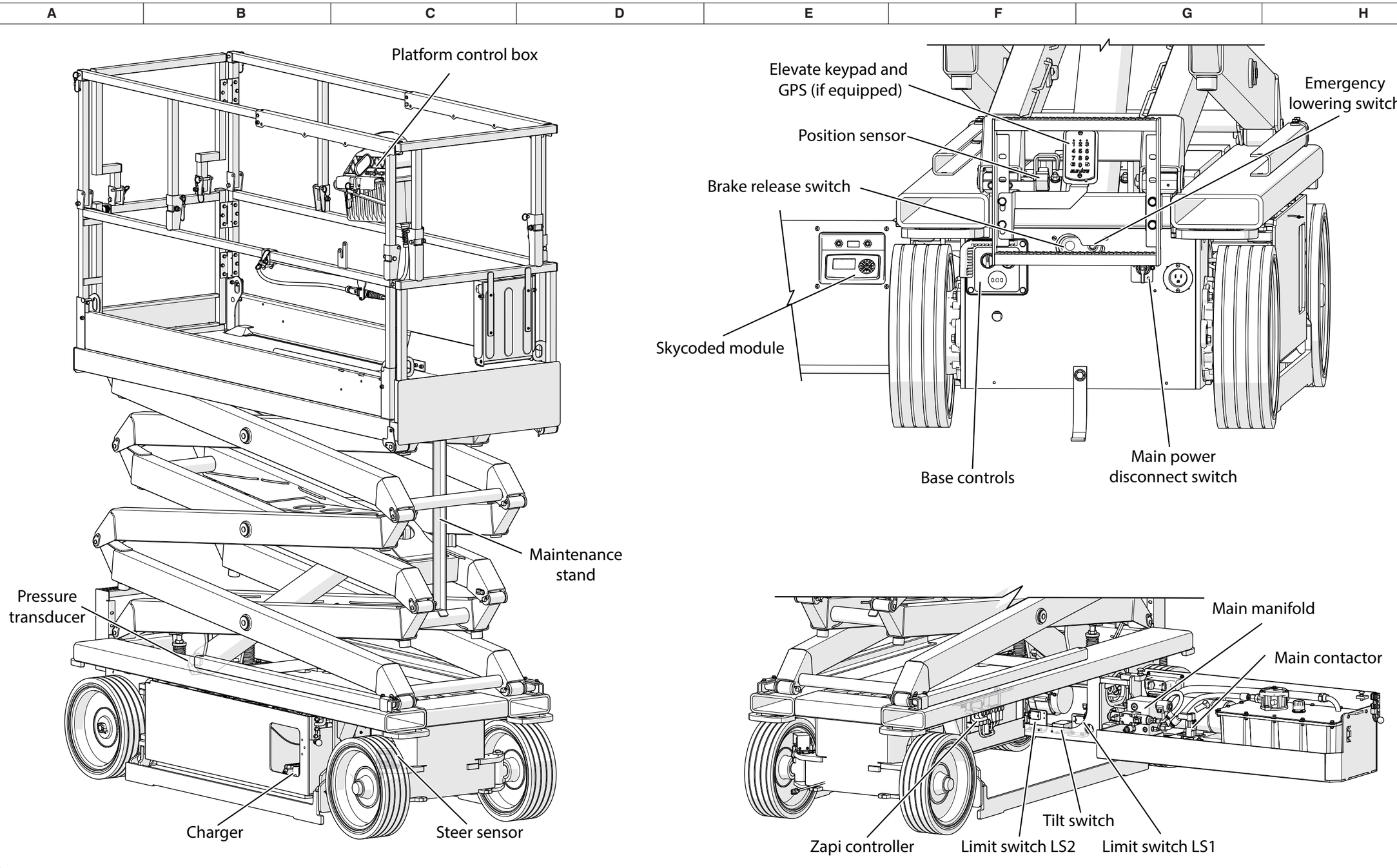

M71810AA

3.31 Hydraulic Schematic - SJ3220 E, SJ3226 E & SJ3232 E ANSI/CSA

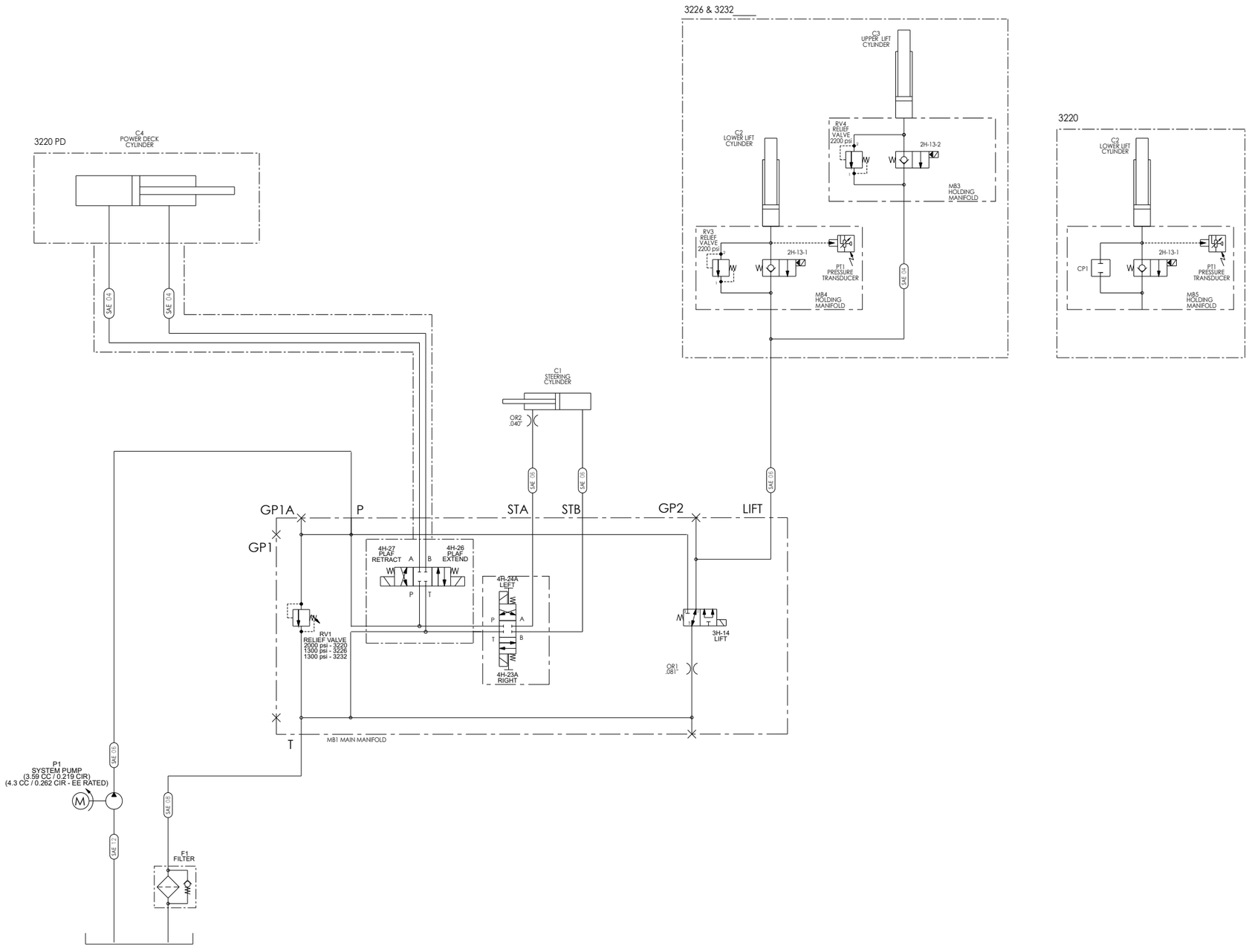

M240722AE

3.32 Hydraulic Schematic - SJ3220 E, SJ3226 E & SJ3232 E CE

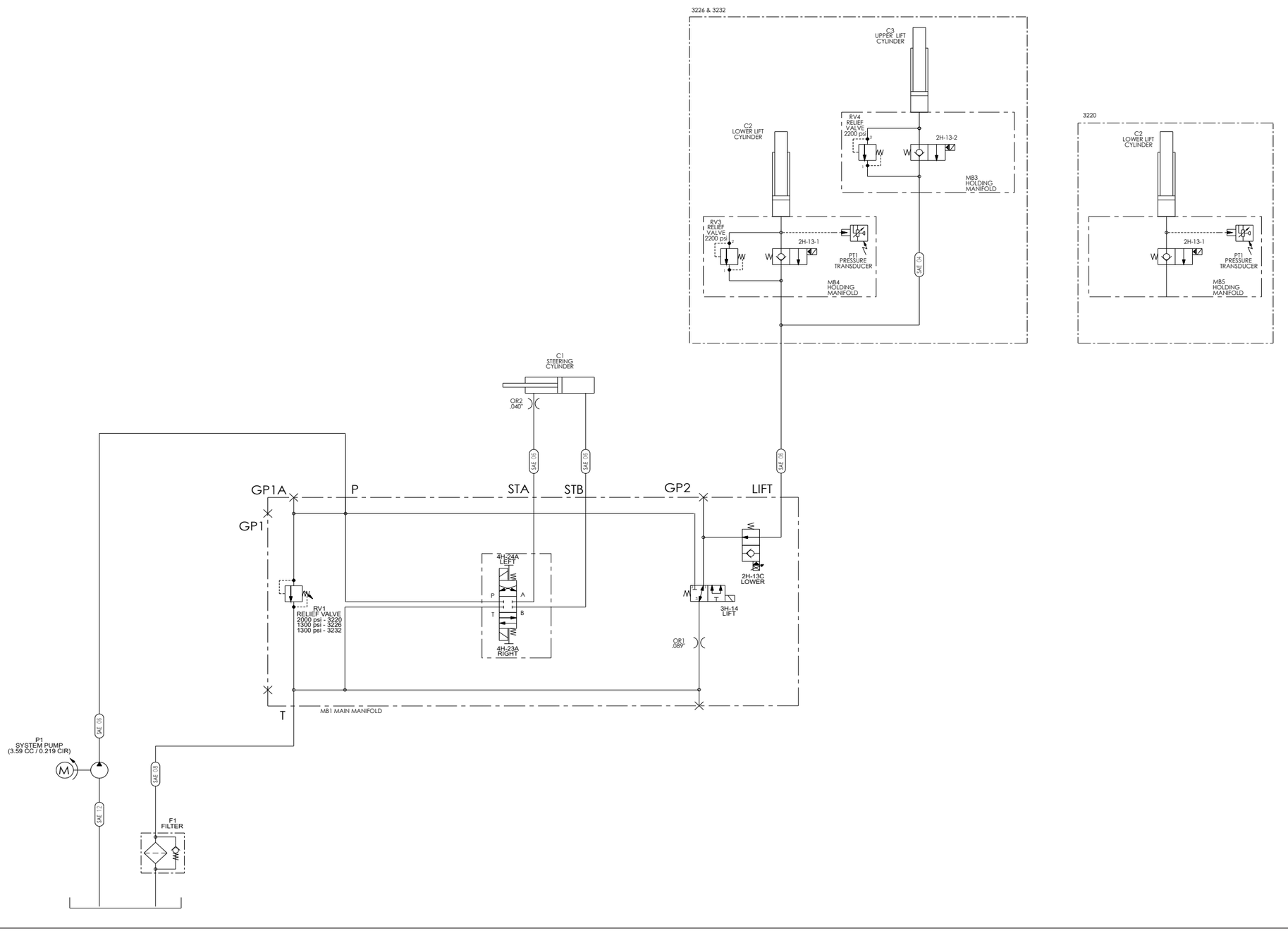

3.33 Hydraulic Schematic - SJ3220 E & SJ3226 E AS & KC

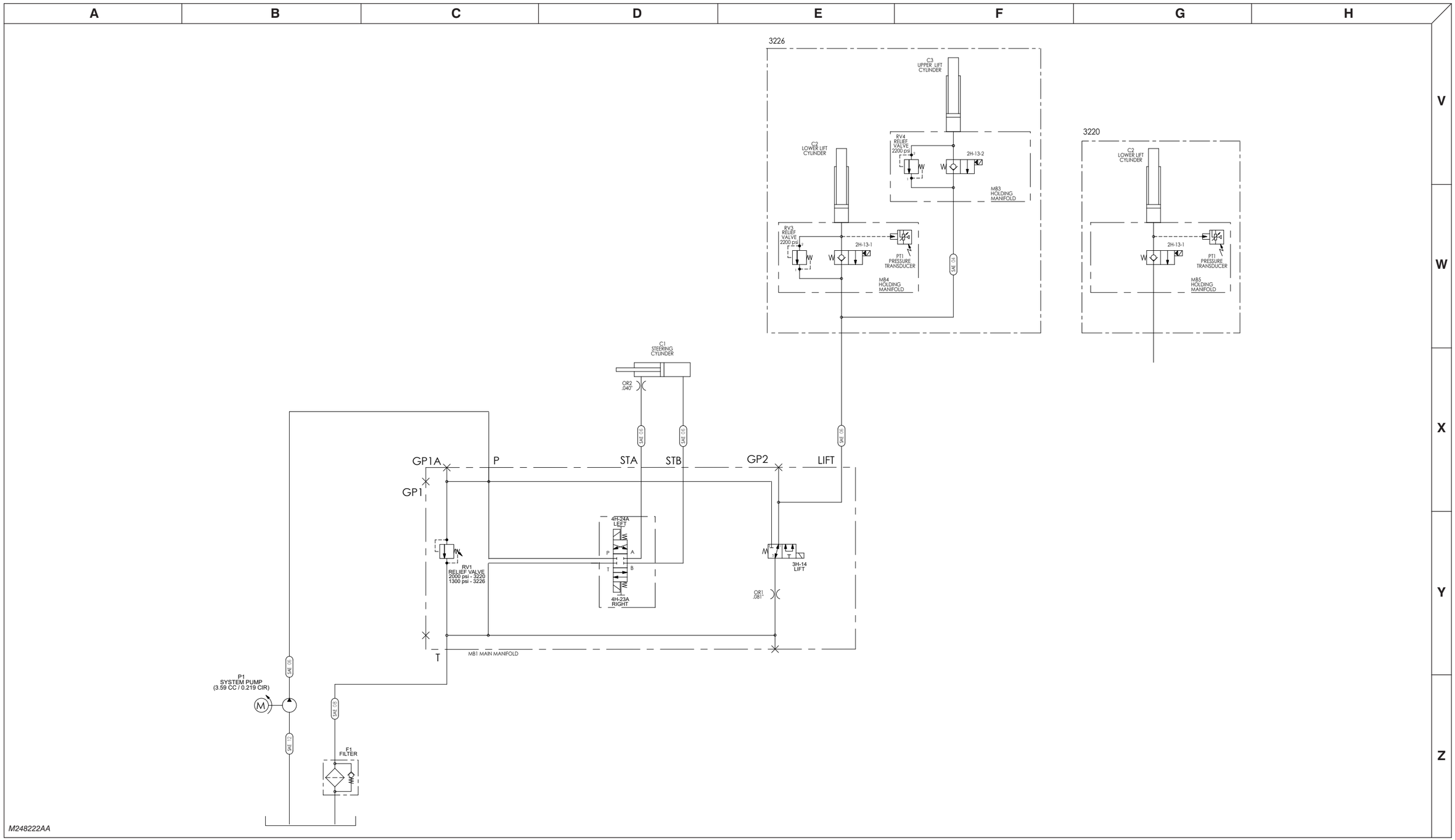

3.34 Hydraulic Schematic - SJ4726 E, SJ4732 E ANSI/CSA

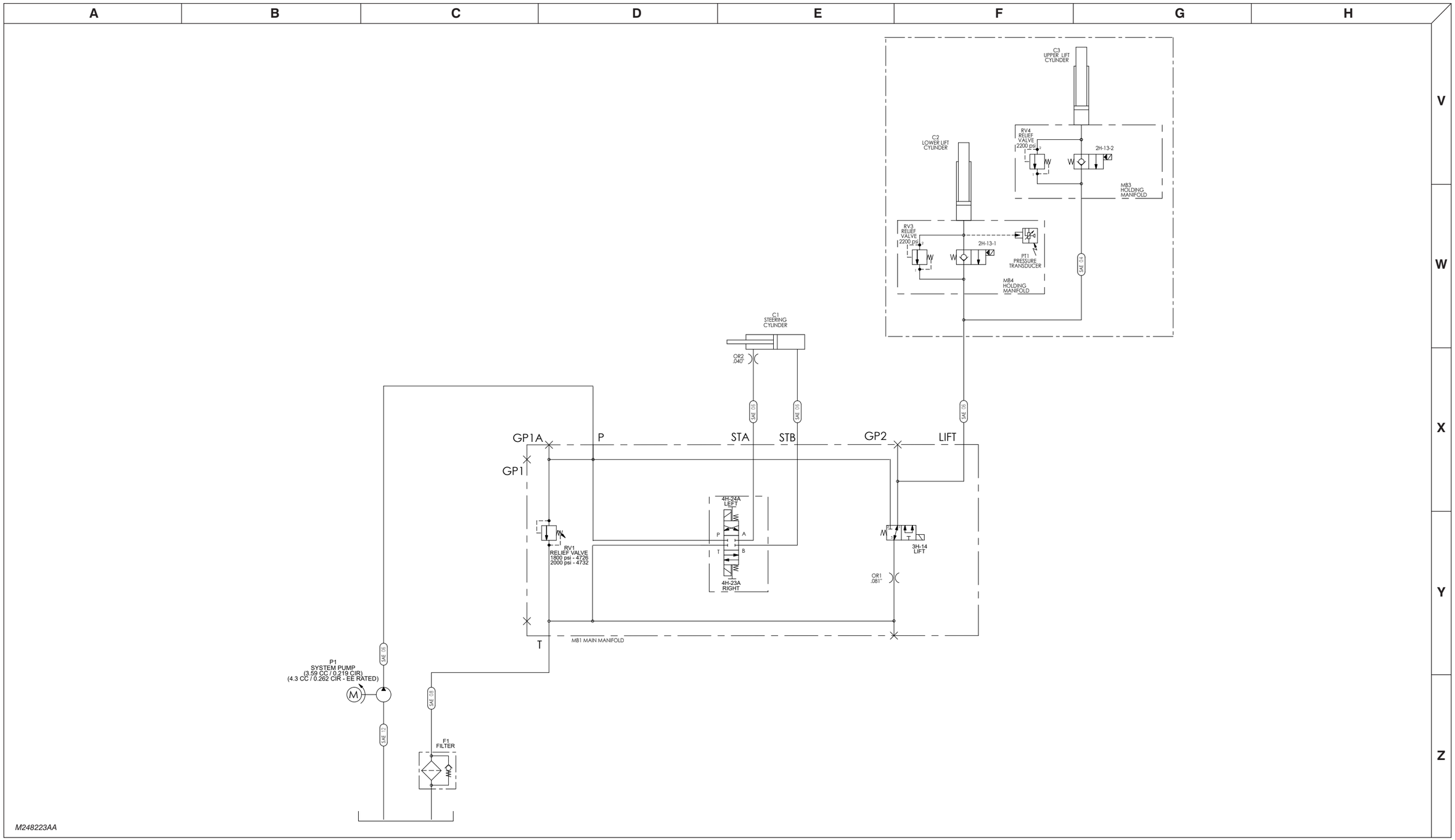

3.35 Hydraulic Schematic - SJ4726 E, SJ4732 E CE

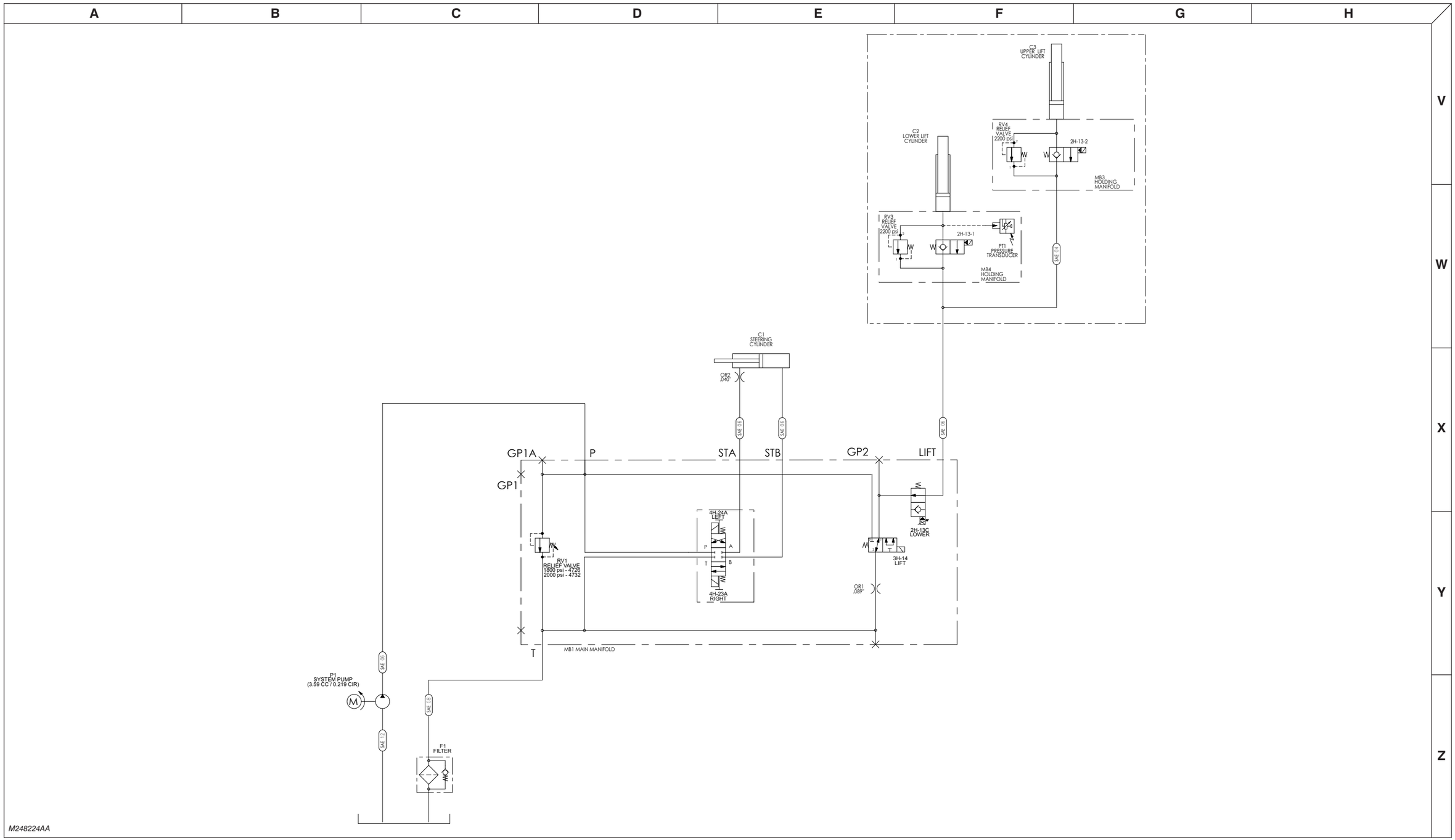

3.36 Hydraulic Schematic - SJ4726 E, SJ4732 E AS, KC

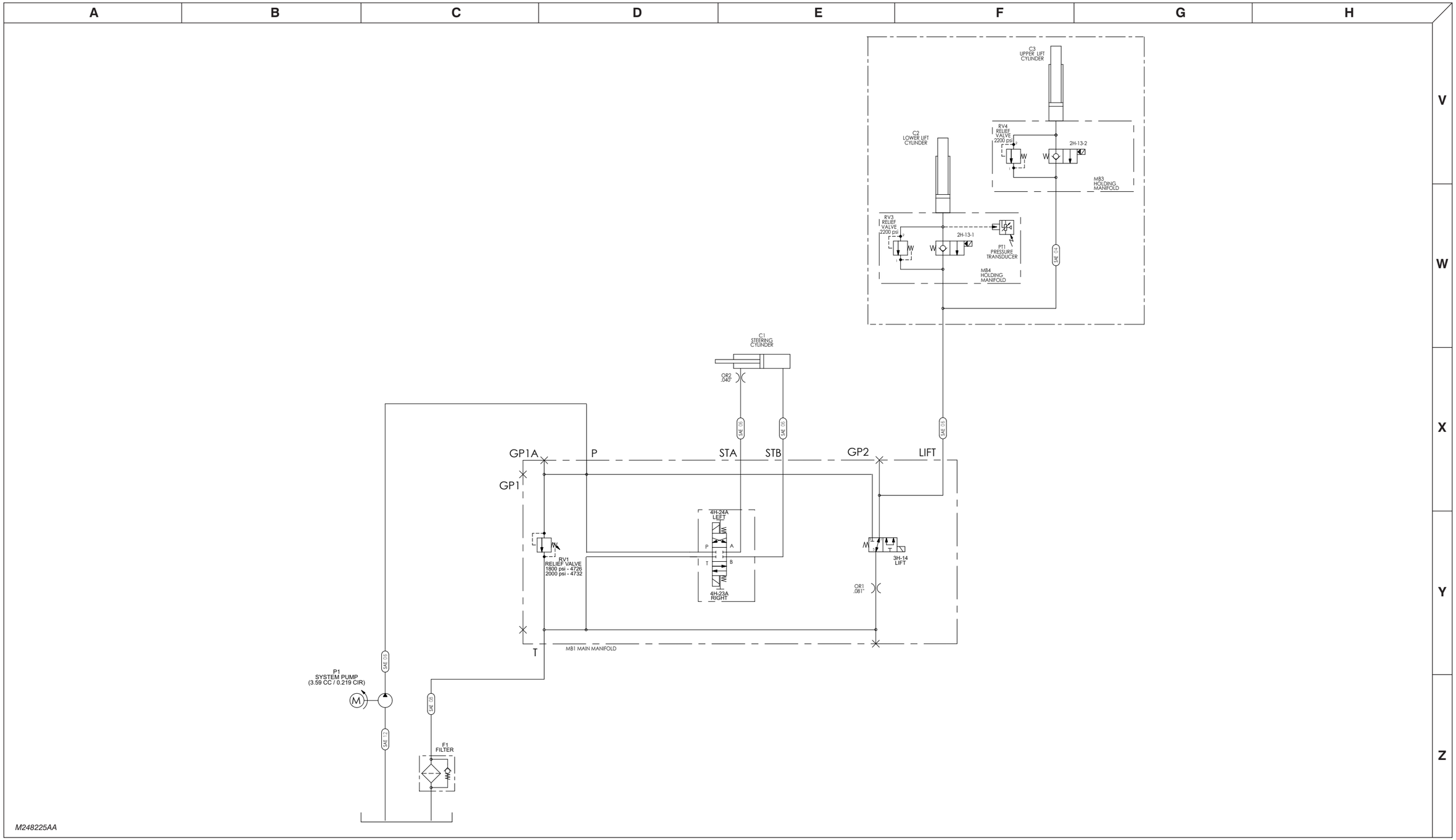

3.37 Hydraulic Schematic - SJ4740 E ANSI/CSA, AS, KC

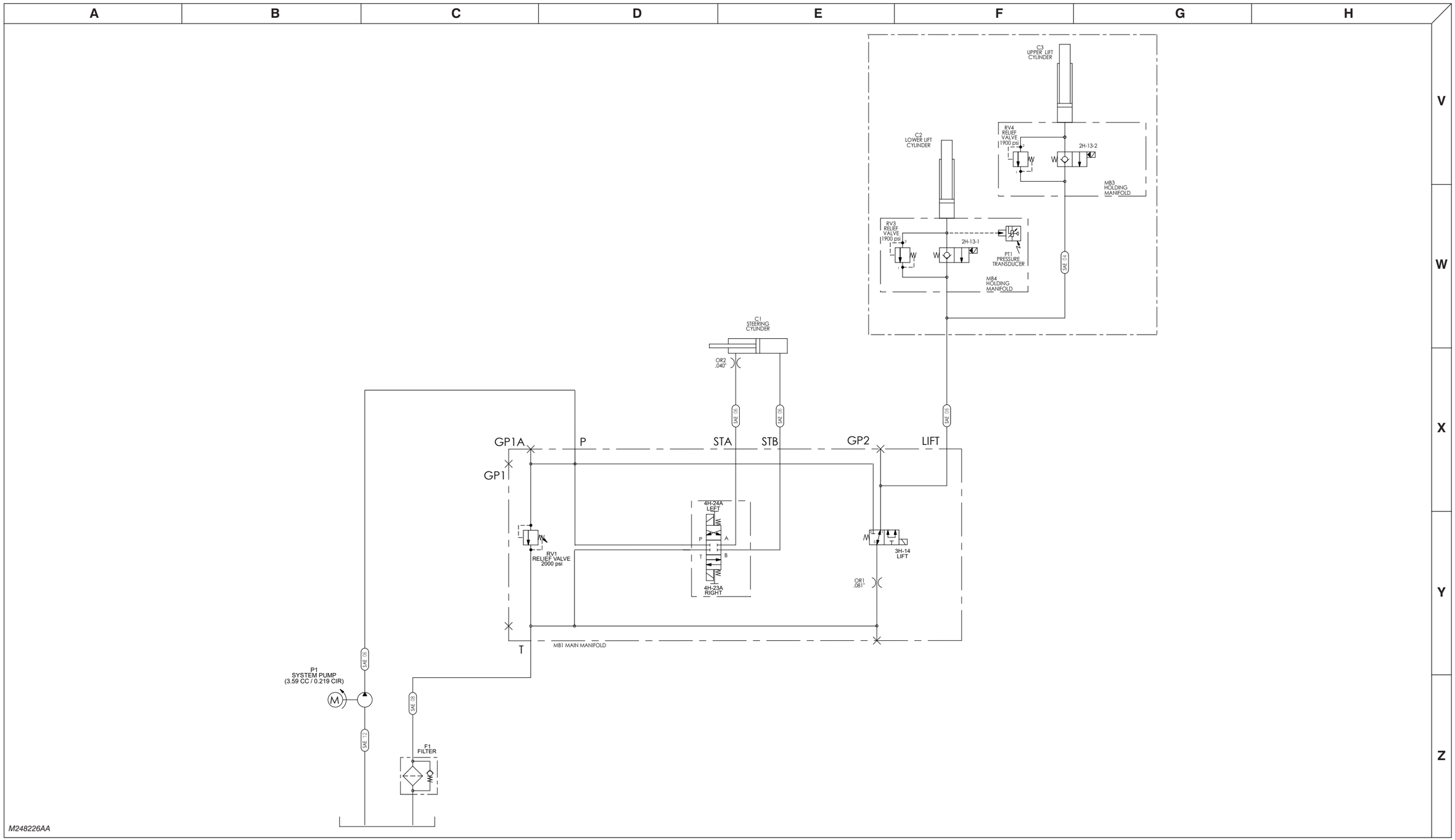

3.38 Hydraulic Schematic - SJ4740 E CE

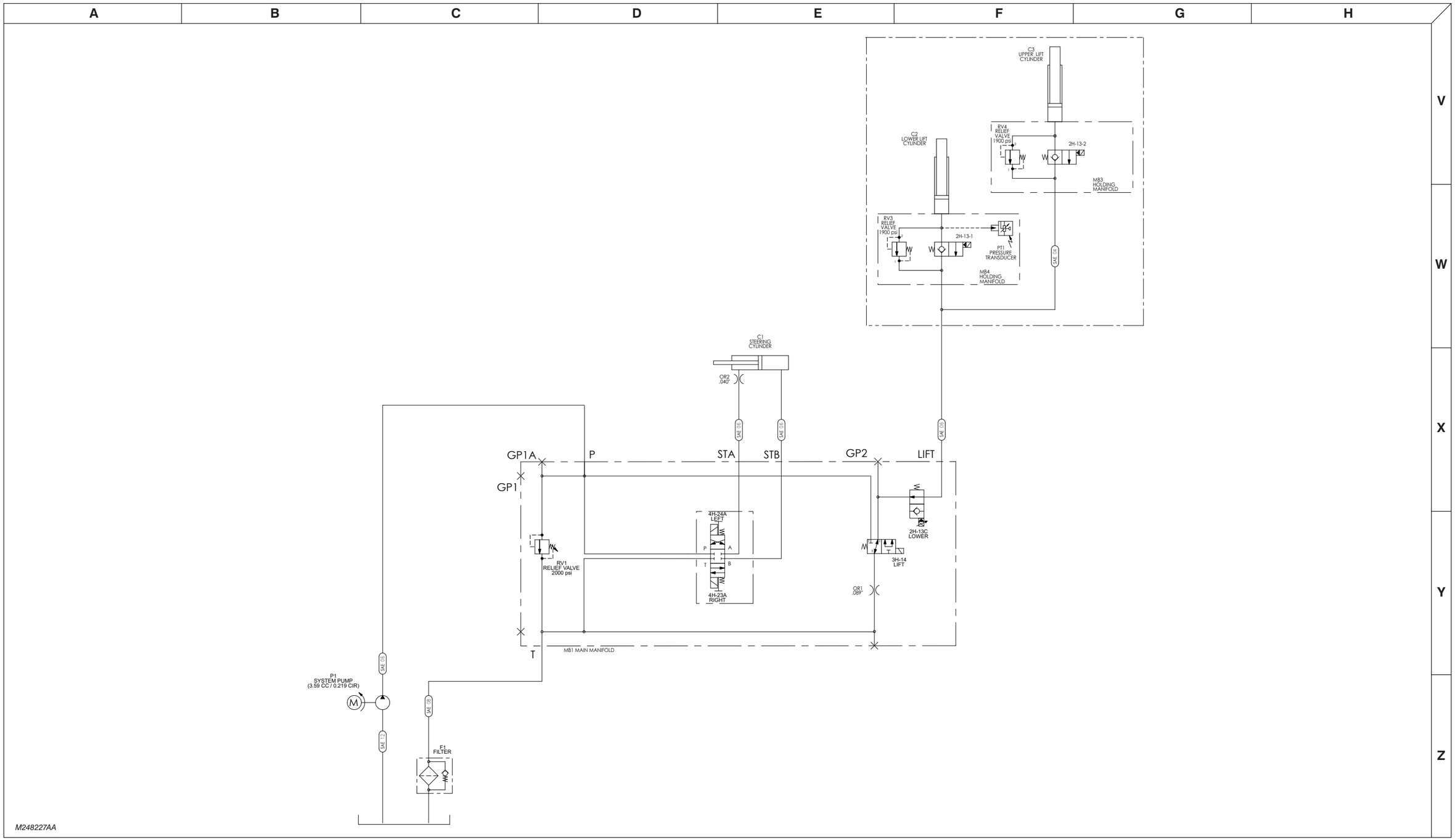

A	B	C	D	E	F	G	H	
								V
								W
								X
								Y
								Z

3.39 Electrical Schematic - ANSI/CSA - All Options

A	B	C	D	E	F	G	H	I	J	K	L	M	N	O

ELECTRICAL OPTION TABLE

✓ = EQUIPPED; X = NOT PROVIDED; O = OPTIONAL

MACHINE TYPE	SJ3220 ANSI	SJ3226 ANSI	SJ3232 ANSI	SJ4726 ANSI	SJ4732 ANSI	SJ4740 ANSI	SJ5545 ANSI
REGULAR BATTERY PACK 4 X 12V	✓	✓	✓	✓	✓	X	X
BATTERY PACK	X	X	X	X	X	✓	✓
2ND CYLINDER	X	✓	✓	✓	✓	✓	✓
SINGLE FLASHING LIGHT	O	O	O	O	O	O	X
DUAL FLASHING LIGHT	O	O	O	O	O	O	O
TELEMATIC	O	O	O	O	O	O	O
BMS	O	O	O	O	O	O	X
WHITE NOISE	O	O	O	O	O	O	O
SGLE	O	O	O	O	O	O	O
DUAL HEIGHT	X	O	✓	X	X	O	✓
POWER DECK	O	X	X	X	X	X	X
EQUIPMENT SHARE	O	O	O	O	O	O	O
POWER DECH BRANCH	✓	X	X	X	X	X	X
PERIMETER LIGHT**	O	O	O	O	O	O	O
PROP. LOWER VALVE	X	X	X	X	X	X	✓
OVERHEAD SENSOR	O	O	O	O	O	O	O

CONTROL BOX

SCISSOR STACK

BASE

EQUIPMENT SHARE ECM & KEYPAD REPLACE S10 SW

EQUIPMENT SHARE OPTION

S4 EMERGENCY STOP

PL-1 OVERLOAD LIGHT

A1 CAN BUS JOYSTICK

PL-3 DRIVE LIGHT

PL-4 LIFT LIGHT

PL-5 BATTERY SOC LIGHT

ENABLE (*2)

RIGHT

LEFT

R1 120 OHM

S3 LIFT/OFF/DRIVE SWITCH

DRIVE

LIFT

SGLE OPTION

S22 SGLE SWITCH

S27 MID SPEED

S8 HORN SWITCH

OS1 OVERHEAD SENSOR

BLACK PIN 2

BLACK PIN 1

BROWN PIN 5

WHITE PIN 6

SHIELD PIN 8

BLACK PIN 4

CRD1 CRD2 CRD3 CRD4

S10 IDLE/PLTF/BASE KEY SWITCH (IN IDLE POSITION)

S28 EMERGENCY STOP

PL-2 OVERLOAD LIGHT

S2 LIFT/LOWER

BASE CONTROL UNIT

FL-22 FLASHING LIGHT(S)

PERIMETER LIGHTS

PERIMETER LIGHT OPTION

S17 INDOOR SWITCH

INDOOR LIGHT

OUTDOOR (DUAL HEIGHT) OPTION

NON ANSI ANTI OVERRISE PROVISION

ANTI OVERRISE PROVISION

S12 DECK ENABLE

S11 DECK EXT/RET

POWER DECK BRANCH

POWERED EXTENSION DECK OPTION

TS1 TILT SENSOR

POTHOLE LIMIT SWITCHES N.C.H.D.

LS1 LS2

PT1 PRESSURE TRANSDUCER

PS1 HEIGHT POSITION SENSOR

AT2 STEERING SENSOR

ALL MOTION, TILT & OVERLOAD BEEPER

BP-29

WHITE NOISE RELAY 29 CR

WHITE NOISE ALARM BP-29-1

WHITE NOISE ALARM OPTION

WITHOUT WHITE NOISE ALARM OPTION

CM1 ZAPI 3IN1 CONTROLLER

CB1 10A CIRCUIT BREAKER

C1 MOTOR CONTACTOR

M1

EN1

M2

RIGHT (MASTER) TRACTION MOTOR

CB2 10A CIRCUIT BREAKER

EN2

M3

LEFT (SLAVE) TRACTION MOTOR

MANIFOLD

ZONE 1 VALVE

H1 HORN

CM2 HVC

F3 3A FUSE

EQS TELEMATIC

F2 3A FUSE

EQUIPMENT SHARE OPTION

F3 1A FUSE

TU

F2 1A FUSE

ELEVATE TELEMATICS OPTION

24V DELTA-Q CHARGER AC LINE VOLTAGE

BMS OPTION

BMS TEMP SENSOR

VREG 24V–19V

S1 MAIN DISCONNECT

CB3 4A CIRCUIT BREAKER

F1 300A FUSE

4740 BATTERY PACK

REGULAR CONVENTIONAL BATTERY PACK

EMERGENCY LOWERING UNIT

SS1 EMERGENCY LOWERING

F-E1 F-E2 F-E3 F-E4

R-E1=1.2KΩ

S52 BRAKE RELEASE SWITCH

D17A D17A-1 D05B

30ACR

BRAKE RELAY

SECOND CYLINDER

DISPLAY

DIAGNOSTICS

DIAGNOSTICS EXT

01 24V DELTA-Q CHARGER AC LINE VOLTAGE
02
03 CHARGER
04
05
06 ELEVATE TELEMATICS
07
08
09
10 4 X 12V BATTERY PACK
11 4 X 12V BATTERY PACK
12
13 BATTERY PACK
14 PUMP MOTOR
15
16
17
18
19 HOLDING SOLENOID
20 EMERGENCY LOWERING UNIT
21
22 HOLDING SOLENOID
23
24 RIGHT MOTOR ENCODER
25 BRAKE RELEASE RELAY
26 RIGHT MOTOR TEMP. SENSOR
27 RIGHT MOTOR
28 RIGHT MOTOR BRAKE
29
30 DISPLAY MODULE
31
32 LEFT MOTOR ENCODER
33 LEFT MOTOR TEMP. SENSOR
34 LEFT MOTOR
35 LEFT MOTOR BRAKE
36
37
38
39 PROPOTIONAL LOWERING
40 UP SOLENOID
41 RIGHT SOLENOID
42 LEFT SOLENOID
43
44 HORN
45
46 I/O EXPANDER
47
48
49

R S T U V W X Y Z

› Electrical Schematic - ANSI/CSA - All Options

M240712AM

电气选项表							
✓ = 已配备; X = 未提供; O = 可选							
机器类型	SJ3220 ANSI	SJ3226 ANSI	SJ3232 ANSI	SJ4726 ANSI	SJ4732 ANSI	SJ4740 ANSI	SJ5545 ANSI
常规电池组	✓	✓	✓	✓	✓	X	X
4 X 12V 电池组	X	X	X	X	X	✓	✓
第二气缸	X	✓	✓	✓	✓	✓	✓
动力平台发线	✓	X	X	X	X	X	X
比例下降阀	X	X	X	X	X	X	✓
双高度	X	X	✓	X	X	X	✓

CONTROL BOX

SCISSOR STACK

BASE

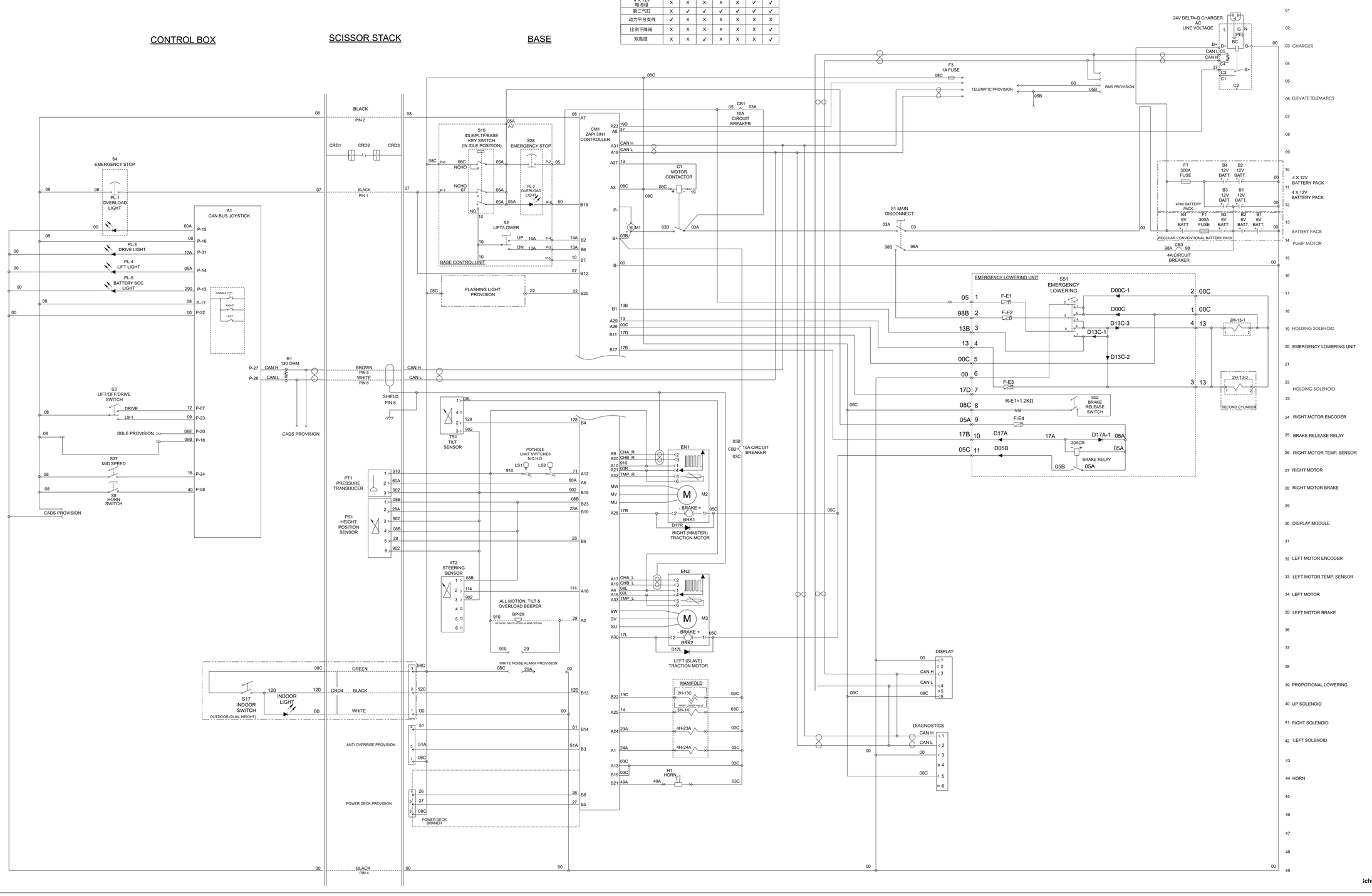

M234444AI

3.41 Electrical Schematic - ANSI/CSA - EE Rated

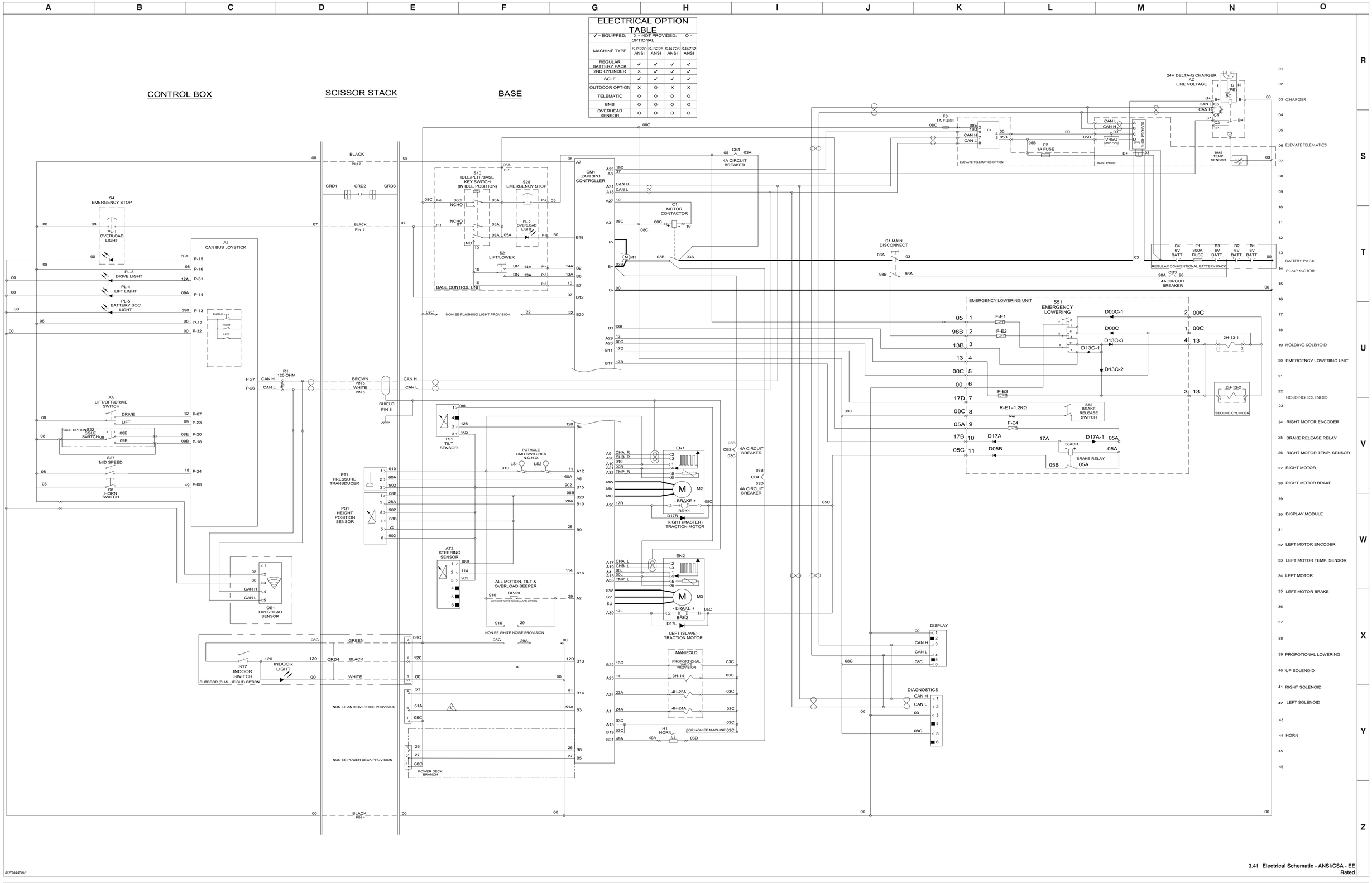

ELECTRICAL OPTION TABLE				
✓ = EQUIPPED; X = NOT PROVIDED; O = OPTIONAL				
MACHINE TYPE	SJ3220 ANSI	SJ3226 ANSI	SJ4726 ANSI	SJ4732 ANSI
REGULAR BATTERY PACK	✓	✓	✓	✓
2ND CYLINDER	X	✓	✓	✓
SGLE	✓	✓	✓	✓
OUTDOOR OPTION	X	O	X	X
TELEMATIC	O	O	O	O
BMS	O	O	O	O
OVERHEAD SENSOR	O	O	O	O

3.41 Electrical Schematic - ANSI/CSA - EE Rated

3.42 Electrical Schematic - CE, AS & KC - All Options

A	B	C	D	E	F	G	H	I	J	K	L	M	N	O

ELECTRICAL OPTION TABLE

✓ = EQUIPPED; X = NOT PROVIDED; O = OPTIONAL

MACHINE TYPE	SJ3220 CE	SJ3220 KC	SJ3220 AS	SJ3226 CE	SJ3226 KC	SJ3226 AS	SJ3232 CE	SJ4726 CE	SJ4726 KC	SJ4726 AS	SJ4732 CE	SJ4732 KC	SJ4732 AS	SJ4740 CE	SJ4740 KC	SJ4740 AS	SJ5545 CE
REGULAR BATTERY PACK 4 X 12V	✓	✓	✓	✓	✓	✓	✓	✓	✓	✓	✓	✓	✓	X	X	X	X
BATTERY PACK	X	X	X	X	X	X	X	X	X	X	X	X	X	✓	✓	✓	✓
2ND CYLINDER	X	X	X	✓	✓	✓	✓	✓	✓	✓	✓	✓	✓	✓	✓	✓	✓
PROP. LOWER VALVE	✓	X	X	✓	X	X	✓	✓	X	X	✓	X	X	✓	X	X	✓
SINGLE FLASHING LIGHT	✓	O	✓	✓	O	✓	✓	✓	O	✓	✓	O	✓	✓	O	✓	X
DUAL FLASHING LIGHT	O	O*	O	O	O*	O	O	O	O*	O	O	O*	O	O	O*	O	✓
TELEMATIC	O	O	O	O	O	O	O	O	O	O	O	O	O	O	O	O	O
BMS	O	O	O	O	O	O	O	O	O	O	O	O	O	O	O	O	X
FOOT SWTICH	X	✓	X	X	✓	X	X	X	✓	X	X	✓	X	X	✓	X	X
WHITE NOISE	O	O	O	O	O	O	O	O	O	O	O	O	O	O	O	O	O
SGLE	O	X	O	O	X	O	O	O	X	O	O	X	O	O	X	O	O
ANTI OVERRISE	X	✓	X	X	✓	X	X	X	✓	X	X	✓	X	X	✓	X	X
ADDITIONAL ANTI OVERRISE	X	O	X	O	✓	X	X	X	O	X	X	O	X	X	O	X	X
DUAL HEIGHT	X	X	X	O	X	O	✓	X	X	X	X	X	X	O	X	O	✓
POWER DECK BRANCH	✓	✓	✓	X	X	X	X	X	X	X	X	X	X	X	X	X	X
PERIMETER LIGHT**	O	O	O	O	O	O	O	O	O	O	O	O	O	O	O	O	O
WHITE NOISE WITH BEEPER***	O	X	X	O	O	X	O	O	O	X	O	O	X	O	O	X	O
OVERHEAD SENSOR	O	X	O	O	X	O	O	O	X	O	O	X	O	O	X	O	O

* OPTION PROVIDES HARNESS ONLY
** NOT TO BE USE WITH DUAL FLASHING LIGHT
*** NOT TO BE USE WITH EXISTING BEEPER OR WHITE NOISE ALARM

CONTROL BOX

SCISSOR STACK

BASE

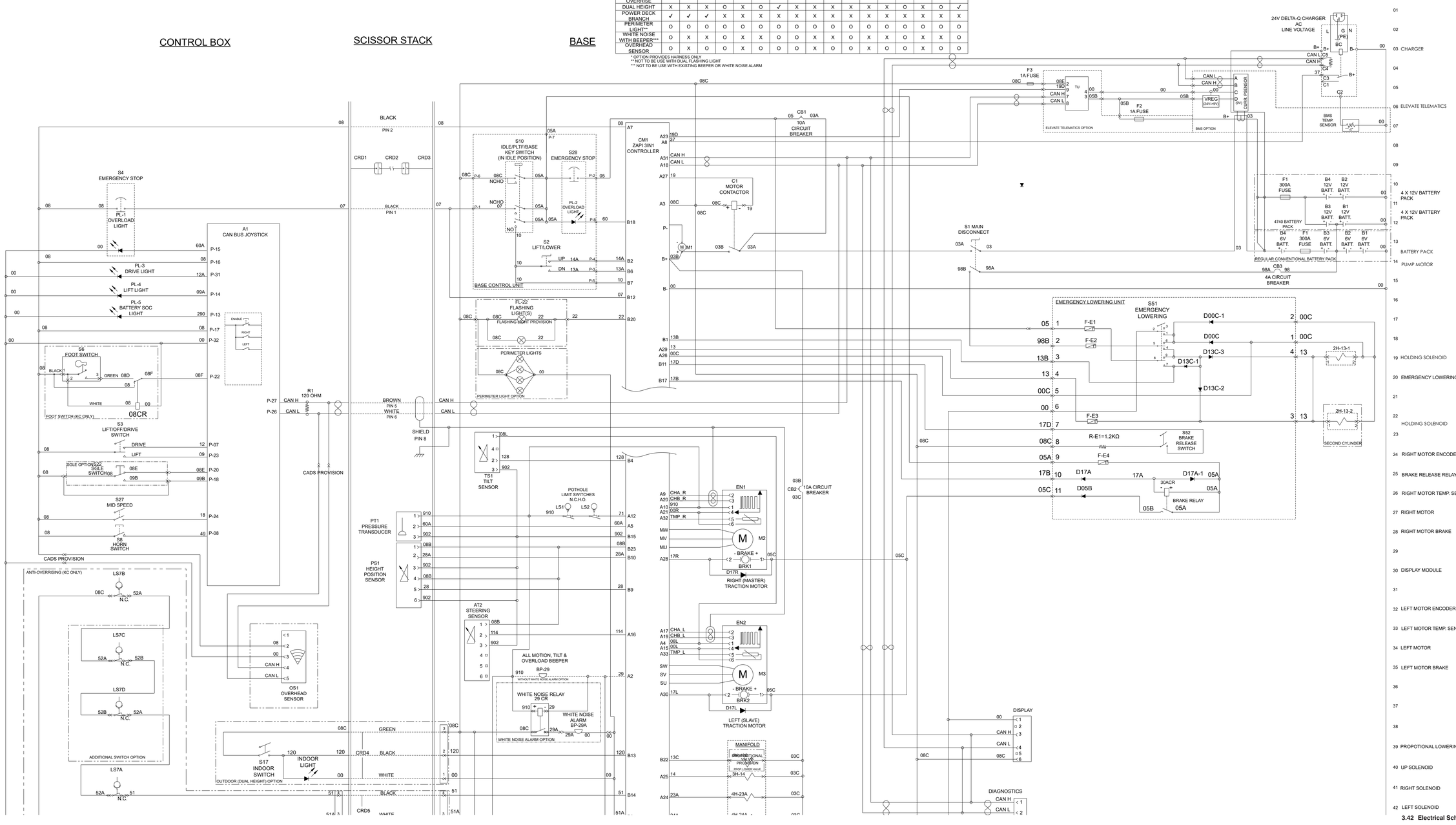

M234447AF

3.43 Electrical Schematic - CE, AS & KC - No Options

A	B	C	D	E	F	G	H	I	J	K	L	M	N	O

ELECTRICAL OPTION TABLE

✓ = EQUIPPED; X = NOT PROVIDED; O = OPTIONAL

MACHINE TYPE=	SJ3220 CE	SJ3220 KC	SJ3220 AS	SJ3226 CE	SJ3226 KC	SJ3226 AS	SJ3232 CE	SJ4726 CE	SJ4726 KC	SJ4726 AS	SJ4732 CE	SJ4732 KC	SJ4732 AS	SJ4740 CE	SJ4740 KC	SJ4740 AS	SJ5545 CE
REGULAR BATTERY PACK 4 X 12V	✓	✓	✓	✓	✓	✓	✓	✓	✓	✓	✓	✓	✓	X	X	X	X
BATTERY PACK	X	X	X	X	X	X	X	X	X	X	X	X	X	✓	✓	✓	✓
2ND CYLINDER	X	X	X	✓	✓	✓	✓	✓	✓	✓	✓	✓	✓	✓	✓	✓	✓
PROP LOWER VALVE	✓	X	X	✓	X	X	✓	✓	X	X	✓	✓	X	X	✓	X	X	✓
SINGLE FLASHING LIGHT	✓	O	✓	✓	O	✓	✓	✓	O	✓	✓	O	✓	✓	O	✓	X
ANTI OVERRISE	X	✓	X	X	✓	X	X	X	✓	X	X	✓	X	X	✓	X	X
FOOT SWITCH	X	✓	X	X	✓	X	X	X	✓	X	X	✓	X	X	✓	X	X
POWER DECK BRANCH	✓	✓	✓	X	X	X	X	X	X	X	X	X	X	X	X	X	X
DUAL FLASHING LIGHT	O	O*	O	O	O*	O	O	O	O*	O	O	O*	O	O	O*	O	✓
DUAL HEIGHT	X	X	X	O	X	O	✓	X	X	X	X	X	X	O	X	O	✓

* OPTION PROVIDES HARNESS ONLY

CONTROL BOX

SCISSOR STACK

BASE

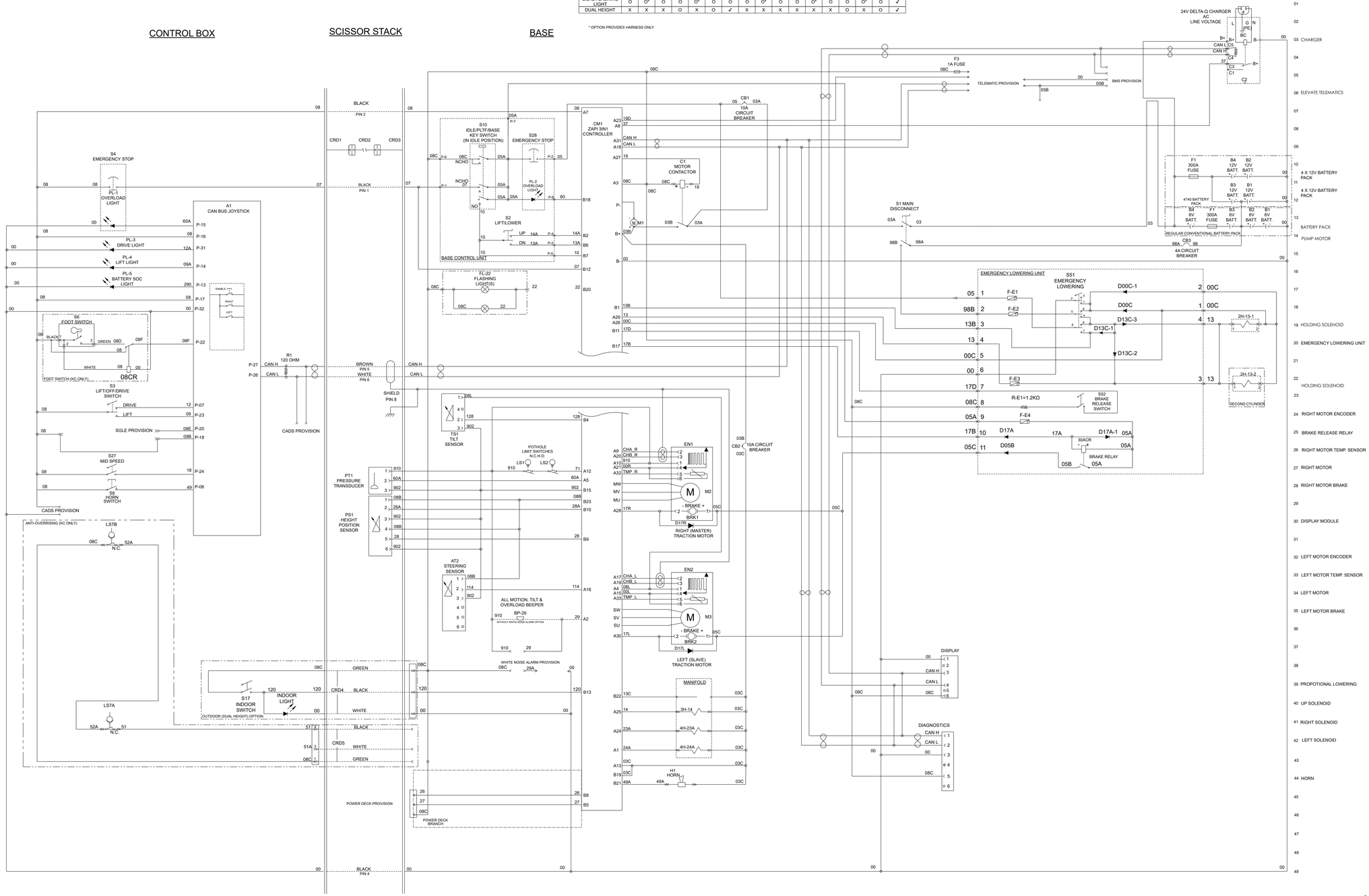

M234446AE

3.43 Electrical Schematic - CE, AS & KC - No Options

3.44 Platform Control Box Harness - ANSI/CSA, CE, AS

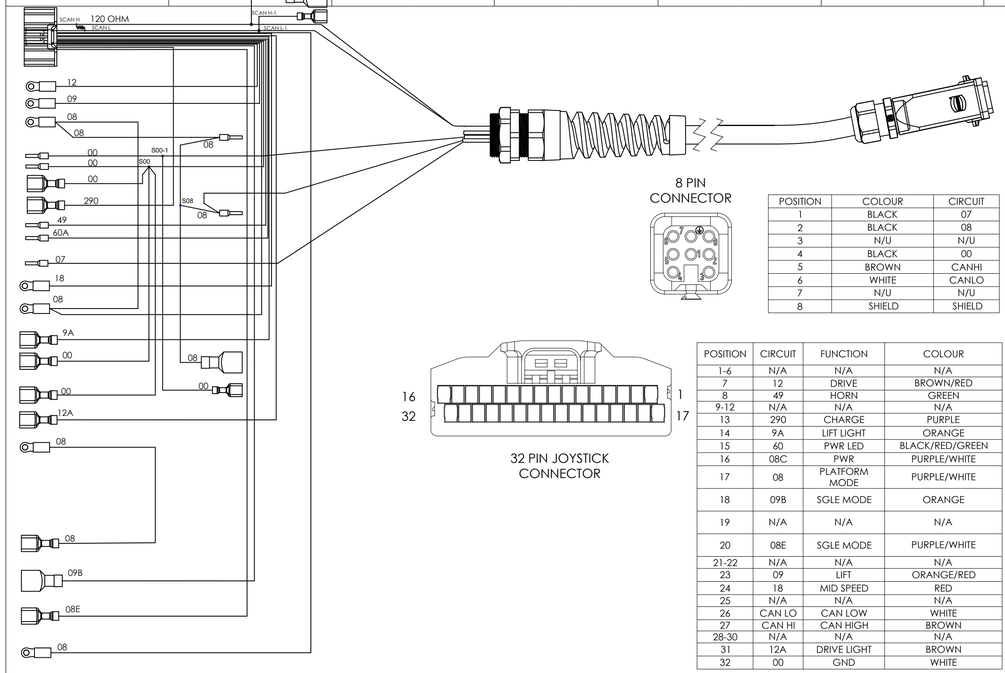

8 PIN CONNECTOR

POSITION	COLOUR	CIRCUIT
1	BLACK	07
2	BLACK	08
3	N/U	N/U
4	BLACK	00
5	BROWN	CANHI
6	WHITE	CANLO
7	N/U	N/U
8	SHIELD	SHIELD

32 PIN JOYSTICK CONNECTOR

POSITION	CIRCUIT	FUNCTION	COLOUR
1-6	N/A	N/A	N/A
7	12	DRIVE	BROWN/RED
8	49	HORN	GREEN
9-12	N/A	N/A	N/A
13	290	CHARGE	PURPLE
14	9A	LIFT LIGHT	ORANGE
15	60	PWR LED	BLACK/RED/GREEN
16	08C	PWR	PURPLE/WHITE
17	08	PLATFORM MODE	PURPLE/WHITE
18	09B	SGLE MODE	ORANGE
19	N/A	N/A	N/A
20	08E	SGLE MODE	PURPLE/WHITE
21-22	N/A	N/A	N/A
23	09	LIFT	ORANGE/RED
24	18	MID SPEED	RED
25	N/A	N/A	N/A
26	CAN LO	CAN LOW	WHITE
27	CAN HI	CAN HIGH	BROWN
28-30	N/A	N/A	N/A
31	12A	DRIVE LIGHT	BROWN
32	00	GND	WHITE

Standard

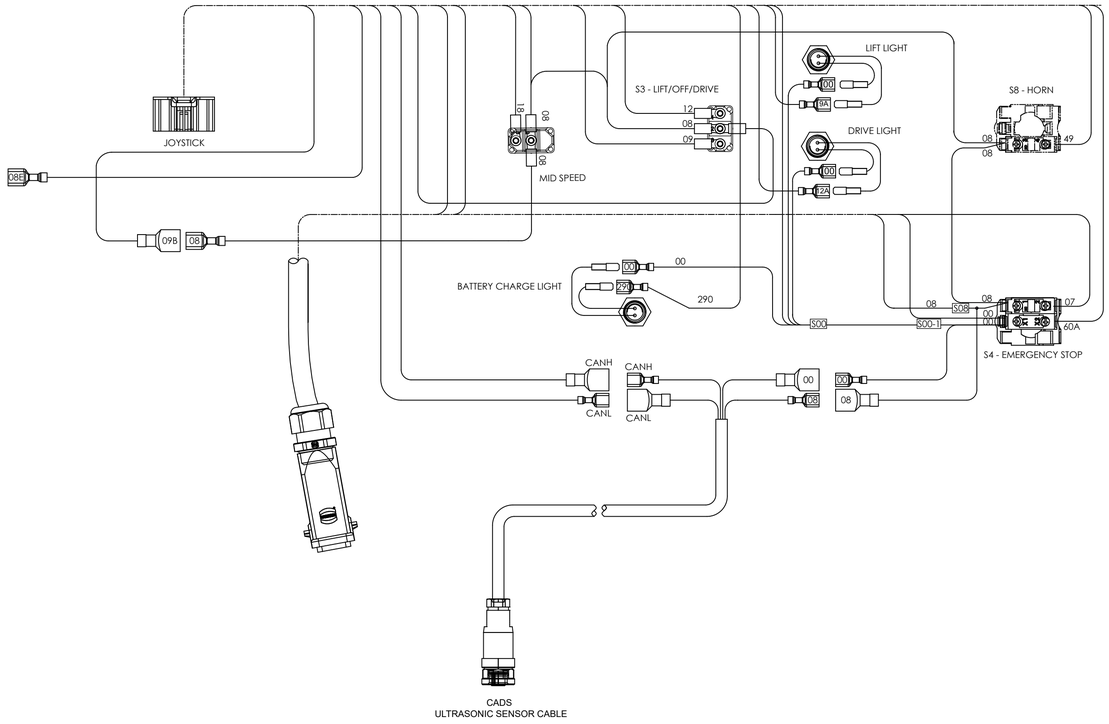

with SGLE

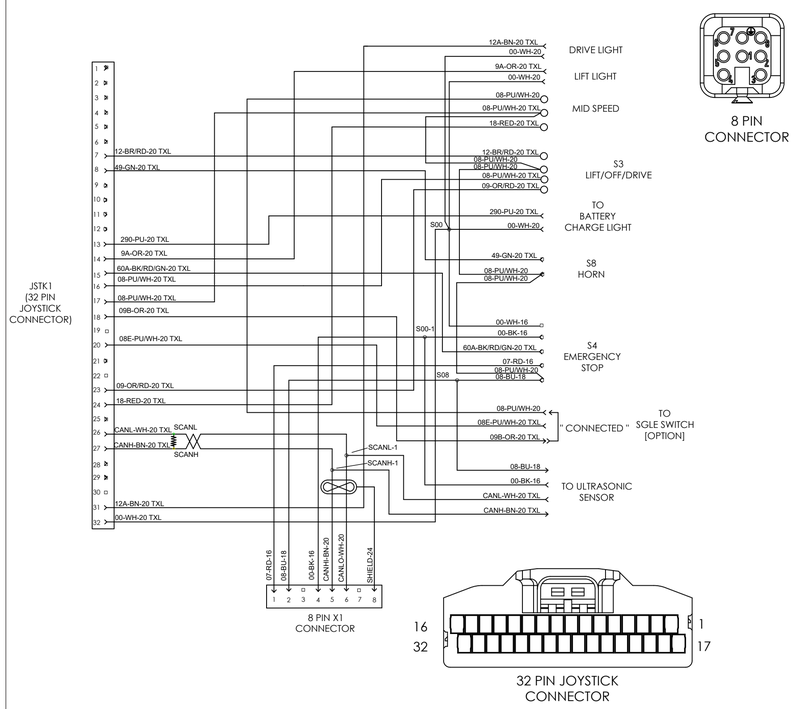

8 PIN CONNECTOR

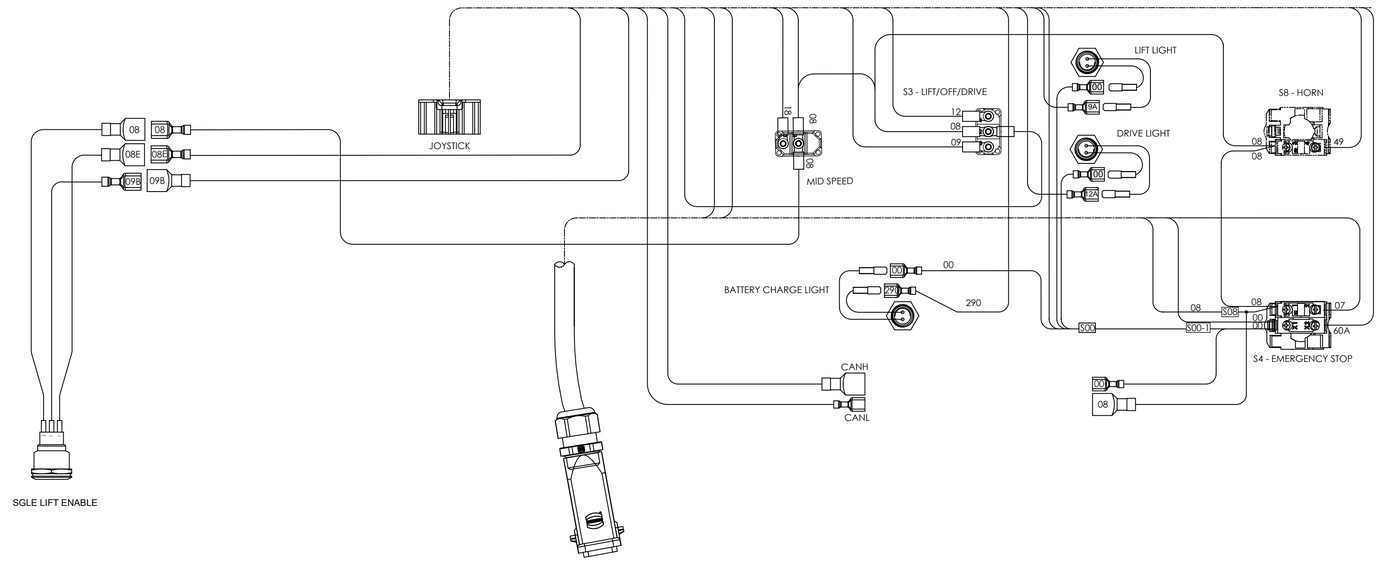

M240708AJ

3.44 Platform Control Box Harness - ANSI/CSA, CE, AS

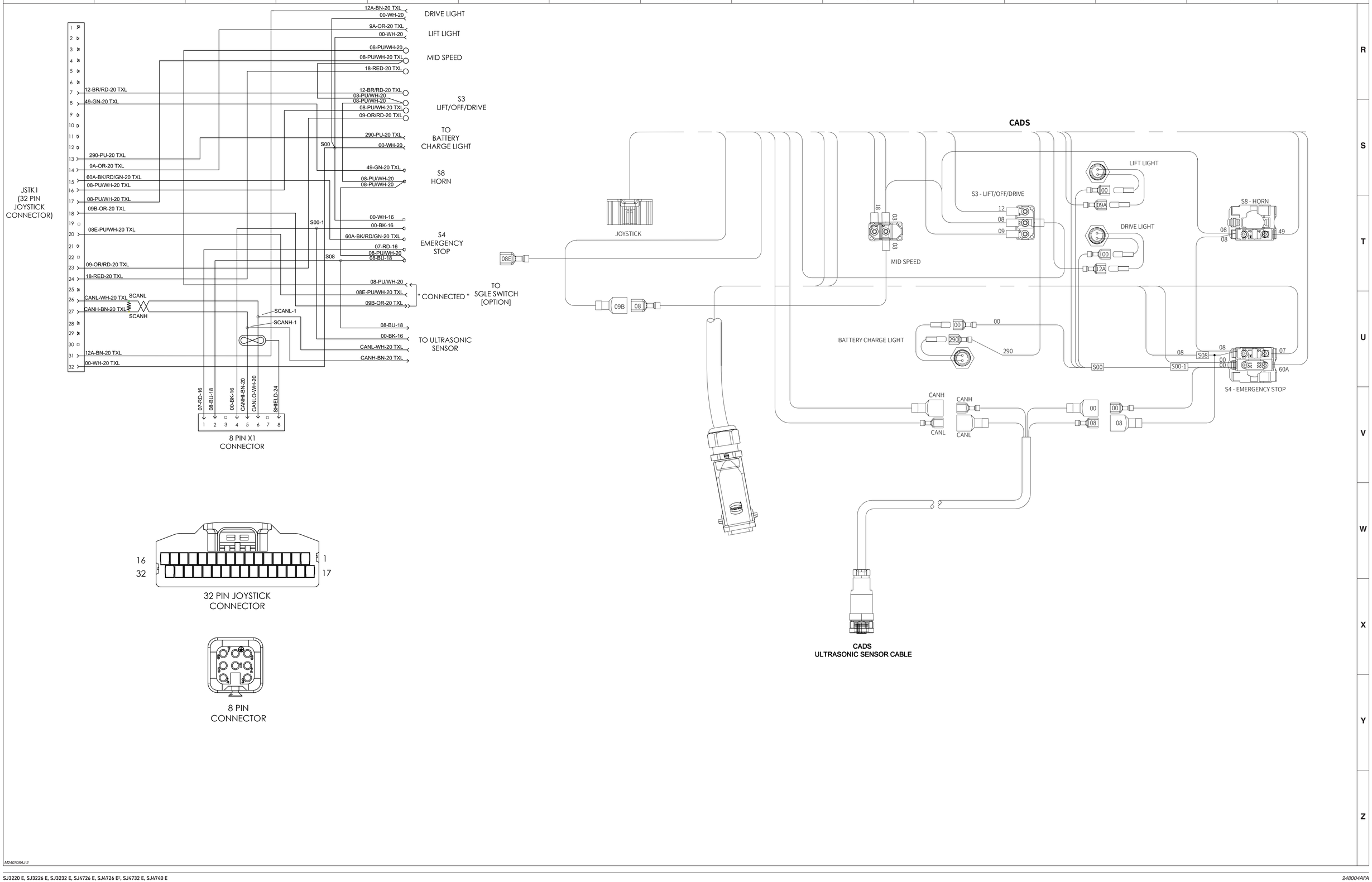

M240708AJ-2

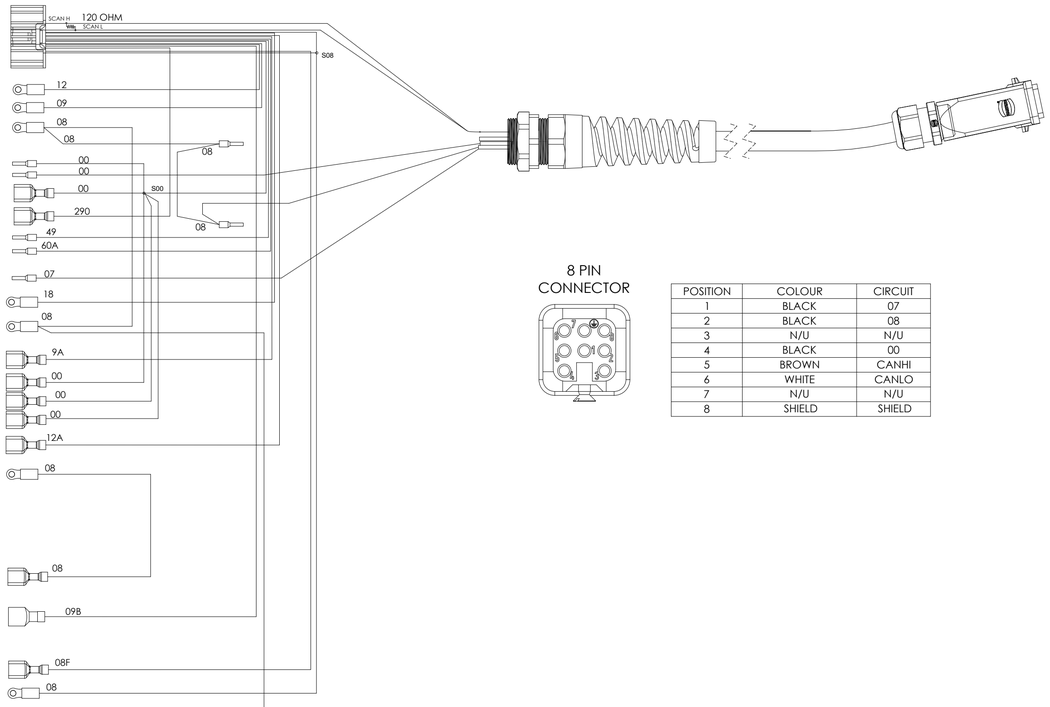

8 PIN CONNECTOR

POSITION	COLOUR	CIRCUIT
1	BLACK	07
2	BLACK	08
3	N/U	N/U
4	BLACK	00
5	BROWN	CANHI
6	WHITE	CANLO
7	N/U	N/U
8	SHIELD	SHIELD

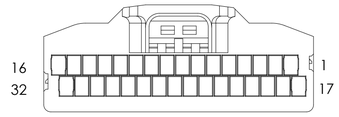

32 PIN JOYSTICK CONNECTOR

POSITION	CIRCUIT	FUNCTION	COLOUR
1-6	N/A	N/A	N/A
7	12	DRIVE	BROWN/RED
8	49	HORN	GREEN
9-12	N/A	N/A	N/A
13	290	CHARGE	PURPLE
14	9A	LIFT LIGHT	ORANGE
15	60	PWR LED	BLACK/RED/GREEN
16	08C	PWR	PURPLE/WHITE
17	08	PLATFORM MODE	PURPLE/WHITE
18	09B	SGLE MODE	ORANGE
19	N/A	N/A	N/A
20	08E	SGLE MODE	PURPLE/WHITE
21-22	N/A	N/A	N/A
23	09	LIFT	ORANGE/RED
24	18	MID SPEED	RED
25	N/A	N/A	N/A
26	CAN LO	CAN LOW	WHITE
27	CAN HI	CAN HIGH	BROWN
28-30	N/A	N/A	N/A
31	12A	DRIVE LIGHT	BROWN
32	00	GND	WHITE

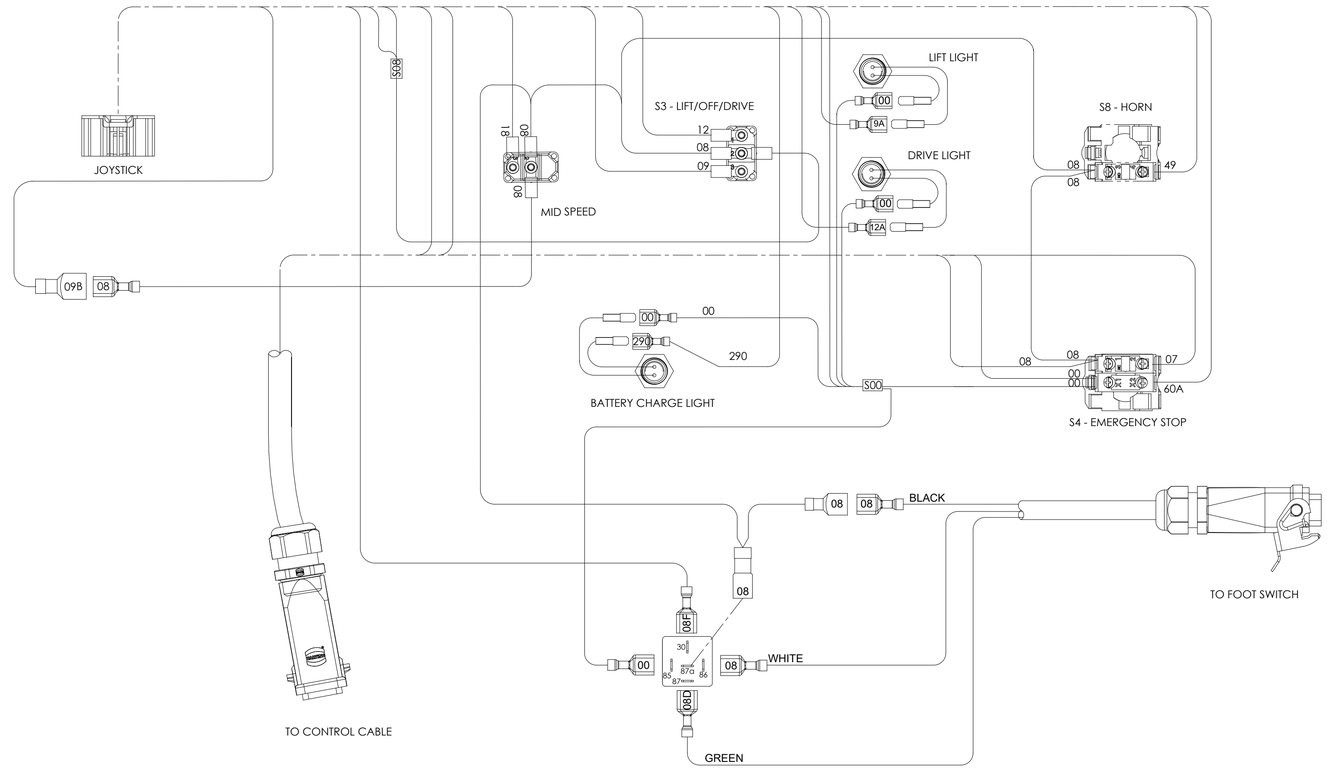

M2438434E

3.46 Main Harness Pinout - SJ3220 E, SJ3226 E, SJ3232 E, SJ4726 E, SJ4732 E

PIN NO.	COLOR	CIRCUIT NO.
1	BLUE/BLACK	24A
2	BLUE/YELLOW	29
3	PURPLE/WHITE	08C
4	PURPLE/WHITE	08L
5	BLACK/RED/GREEN	60A
6	N/U	N/U
7	PURPLE/WHITE	08
8	GREEN/WHITE	37
9	WHITE (PAIR)	CHAR
10	BLACK	910
11	N/U	N/U
12	BLUE/RED	71
13	GREEN/PURPLE	03C
14	N/U	N/U
15	WHITE	00L
16	YELLOW/RED	114
17	WHITE (PAIR)	CHAL
18	WHITE	CAN LO
19	BLACK (PAIR)	CHBL
20	BLACK (PAIR)	CHBR
21	WHITE	00R
22	N/U	N/U
23	WHITE/RED	19D
24	BLACK/WHITE	23A
25	BLACK	14
26	WHITE	00C
27	WHITE/RED	19
28	BLUE/RED	17R
29	ORANGE	13
30	BLUE/RED	17L
31	BROWN	CAN HI
32	BLACK	TMPR
33	BLACK	TMPL
34	N/U	N/U
35	N/U	N/U

P-A
TO CONTROLLER PLUG A

P-B
TO CONTROLLER PLUG B

PIN NO.	COLOR	CIRCUIT NO.
1	ORANGE	13B
2	BLACK	14A
3	BLACK/GREEN	51A
4	BLACK/YELLOW	128
5	BLACK	27A
6	ORANGE	13A
7	BLUE / WHITE	10
8	GREEN	26A
9	GREEN / RED	28
10	GREEN / RED	28A
11	BLUE/RED	17D
12	RED	07
13	RED	120
14	BLACK/GREEN	51
15	WHITE	902
16	BLUE/YELLOW	29B
17	BLUE/RED	17B
18	BLACK / RED / GREEN	60
19	GREEN/PURPLE	03C
20	ORANGE / BLUE	22
21	GREEN	49A
22	ORANGE	13C
23	PURPLE/WHITE	08B

P14
TO STEERING SENSOR (AT2)

TO CB3
98A - WHITE

TO BMS
058 - PURPLE/BLACK
00 - WHITE
CANH - YELLOW
CANL - GREEN

TO BEEPER (BP-29)
910 - BLACK
29 - BLUE/YELLOW

TO WHITE NOISE ALARM (BP-29-1)
29A - BLUE/YELLOW
00 - WHITE

TO WHITE NOISE RELAY (29 CR)
08C - PURPLE/WHITE
29A - BLUE/YELLOW
29B - BLUE/YELLOW

TO HORN
49A - GREEN
03C - GREEN/PURPLE

TO FUSE SUPPLIED WITH TRACKUNIT
05B - PURPLE/BLACK

P5
TO CHARGER

P12
RIGHT STEER VALVE (4H-23A)
PIN 1 - 03C GREEN/PURPLE
PIN 2 - 23A BLACK/WHITE

TO LIFT SOLENOID (3H-14)
14 - BLACK
03C - GREEN/PURPLE

TO PROPORTIONAL LOWERING
13C - ORANGE
03C - GREEN

LABEL DEUTSCH CONNECTORS "RIGHT" & "LEFT" WITH INDELIBLE INK

P13
LEFT STEER VALVE (4H-24A)
PIN 1 - 03C GREEN/PURPLE
PIN 2 - 24A BLUE/BLACK

TO MOTOR CONTACTOR (C1)
19 - WHITE/RED
08C - PURPLE/WHITE

TO MOTOR CONTACTOR (C1)
(LIVE SIDE)
03A - GREEN/PURPLE

TO B+ TERMINAL ON CONTROLLER
038 - GREEN

P3
TO DIAGNOSTICS

P6
TO DISPLAY

TO CB2
038 - GREEN
03C - GREEN/PURPLE

TO CB1
03A - GREEN/PURPLE
05 - PURPLE/BLACK

TO HEATSINK PLATE ON CONTROLLER
SHIELD - BLACK

TO B- TERMINAL ON CONTROLLER
00 - WHITE

P-B
TO CONTROLLER PLUG B

P15
TO OUTDOOR OPTION

J18
TO ANTI OVERRAISE

LABEL "OUTDOOR SWITCH"

LABEL "ANTIOVERAISE"

P-A
TO CONTROLLER PLUG A

TO POTHOLE LIMIT SWITCH (LS1/LS2)
910 - BLACK
71 - BLUE/RED

P16
TO POWER DECK

LABEL "POWERDECK"

P7
TO PRESSURE TRANSDUCER (PT1)

P10
TO CONTROL CABLE

P8
TO ANGLE TRANSDUCER (AT1)

J11
TO BASE CONTROLS UNIT

P1
TO LEFT TRACTION MOTOR (EN2)

P1-2 (EN2 BRAKE)

P17
TO TELEMATIC (ELEVATE)

P4
TO TILT SENSOR (TS1)

LABEL "32XX"

TO FLASHING LIGHT (FL-22)
08C - PURPLE/WHITE
22 - ORANGE/BLUE

TO BATTERY DISCONNECT
98B - WHITE
98A - WHITE

P9
TO EMERGENCY LOWERING (PCB)

P2
TO RIGHT TRACTION MOTOR (EN1)

P2-2 (EN1 BRAKE)

P1
BACK VIEW

TO LEFT MOTOR
PIN 1 - 08L - PURPLE/WHITE
PIN 2 - CHAL - WHITE
PIN 3 - CHBL - BLACK
PIN 4 - 00L - WHITE
PIN 5 - TMPL - BLACK
PIN 6 - 00L - WHITE

P2
BACK VIEW

TO RIGHT MOTOR
PIN 1 - 910 - BLACK
PIN 2 - CHAR - WHITE
PIN 3 - CHBR - BLACK
PIN 4 - 00R - WHITE
PIN 5 - TMPR - BLACK
PIN 6 - 00R - WHITE

P1-2
BACK VIEW

TO LEFT MOTOR
PIN 1 - 05C - PURPLE/BLACK
PIN 2 - 17L - BLUE/RED

P2-2
BACK VIEW

TO RIGHT MOTOR
PIN 1 - 05C - PURPLE/BLACK
PIN 2 - 17R - BLUE/RED

P3
BACK VIEW

TO DIAGNOSTICS / POWERDECK
PIN 1 - CAN HI - YELLOW
PIN 2 - CAN LO - GREEN
PIN 3 - 00 - WHITE
PIN 4 - N/U
PIN 5 - 08C - PURPLE/WHITE
PIN 6 - N/U

P4
BACK VIEW

TO TILT SENSOR
PIN 1 - 08L PURPLE/WHITE
PIN 2 - 128 BLACK/YELLOW
PIN 3 - 902 WHITE
PIN 4 - N/U

P5
BACK VIEW

TO CHARGER
PIN 1 - 37 GREEN/WHITE
PIN 2 - CAN HI - YELLOW
PIN 3 - CAN LO - GREEN

P6
BACK VIEW

TO DISPLAY
PIN 1 - 00 - WHITE
PIN 2 - N/U
PIN 3 - CAN HI - YELLOW
PIN 4 - CAN LO - GREEN
PIN 5 - N/U
PIN 6 - 08C - PURPLE/WHITE

P7
BACK VIEW

TO PRESSURE TRANSDUCER
PIN 1 - 910 BLACK
PIN 2 - 60A BLACK/RED/GREEN
PIN 3 - 902 WHITE

P8
BACK VIEW

TO ANGLE TRANSDUCER
PIN 1 - 08B PURPLE/WHITE
PIN 2 - 28A GREEN/RED
PIN 3 - 902 WHITE
PIN 4 - 08B PURPLE/WHITE
PIN 5 - 28 GREEN/RED
PIN 6 - 902 WHITE

P9
BACK VIEW

TO EMERGENCY LOWERING
PIN 1 - 05 - PURPLE/BLACK
PIN 2 - 98B - WHITE
PIN 3 - 13A - ORANGE
PIN 4 - 13 - ORANGE
PIN 5 - 00C - WHITE
PIN 6 - 00 - WHITE
PIN 7 - 17D - BLUE/RED
PIN 8 - 08C - PURPLE/WHITE
PIN 9 - 05A - PURPLE/BLACK
PIN 10 - 17B - BLUE/RED
PIN 11 - 05C - PURPLE/BLACK
PIN 12 - N/U

P10
BACK VIEW

TO UPPER CONTROL
PIN 1 - 07 - RED
PIN 2 - 08 - BLUE
PIN 3 - N/U
PIN 4 - 00 - BLACK
PIN 5 - CAN HI - BROWN
PIN 6 - CAN LO - WHITE
PIN 7 - N/U
PIN 8 - SHIELD - BLACK

J11
BACK VIEW

TO BASE CONTROLS
PIN 1 - 07 - RED
PIN 2 - 05 - PURPLE/BLACK
PIN 3 - 13A - ORANGE
PIN 4 - 14A - BLACK
PIN 5 - 10 - BLUE/WHITE
PIN 6 - 08C - PURPLE/WHITE
PIN 7 - 05A - PURPLE/BLACK
PIN 8 - 60 - BLACK/RED/GREEN

P12
BACK VIEW

RIGHT STEER VALVE
PIN 1 - 03C GREEN/PURPLE
PIN 2 - 23A BLACK/WHITE

P13
BACK VIEW

LEFT STEER VALVE
PIN 1 - 03C GREEN/PURPLE
PIN 2 - 24A BLUE/BLACK

P14
BACK VIEW

TO STEERING SENSOR
PIN A - 08B PURPLE/WHITE
PIN B - 114 YELLOW/RED
PIN C - 902 WHITE
PIN D - N/U
PIN E - N/U
PIN F - N/U

P15
BACK VIEW

TO OUTDOOR SWITCH
PIN 1 - 00 WHITE
PIN 2 - 120 RED
PIN 3 - 08C PURPLE/WHITE

P16
BACK VIEW

TO POWERDECK
PIN 1 - 26 GREEN
PIN 2 - 27A BLACK
PIN 3 - 08C PURPLE/WHITE

P17
BACK VIEW

TO TELEMATIC
PIN 1 - N/U
PIN 2 - 08E PURPLE/WHITE
PIN 3 - 05B PURPLE/BLACK
PIN 4 - 00 WHITE
PIN 5 - N/U
PIN 6 - N/U
PIN 7 - CANH YELLOW
PIN 8 - CANL GREEN
PIN 9 - 19D WHITE/RED
PIN 10 - N/U
PIN 11 - N/U
PIN 12 - N/U

J18
BACK VIEW

TO ANTI OVERRAISE
PIN 1 - 08C PURPLE/WHITE
PIN 2 - N/U
PIN 3 - 51A BLACK/GREEN
PIN 4 - 51 BLACK/GREEN

M250202AA-3

3.46 Main Harness Pinout - SJ3220 E, SJ3226 E, SJ3232 E, SJ4726 E, SJ4732 E

3.47 Main Harness Schematic - SJ3220 E, SJ3226 E, SJ3232 E, SJ4726 E, SJ4732 E

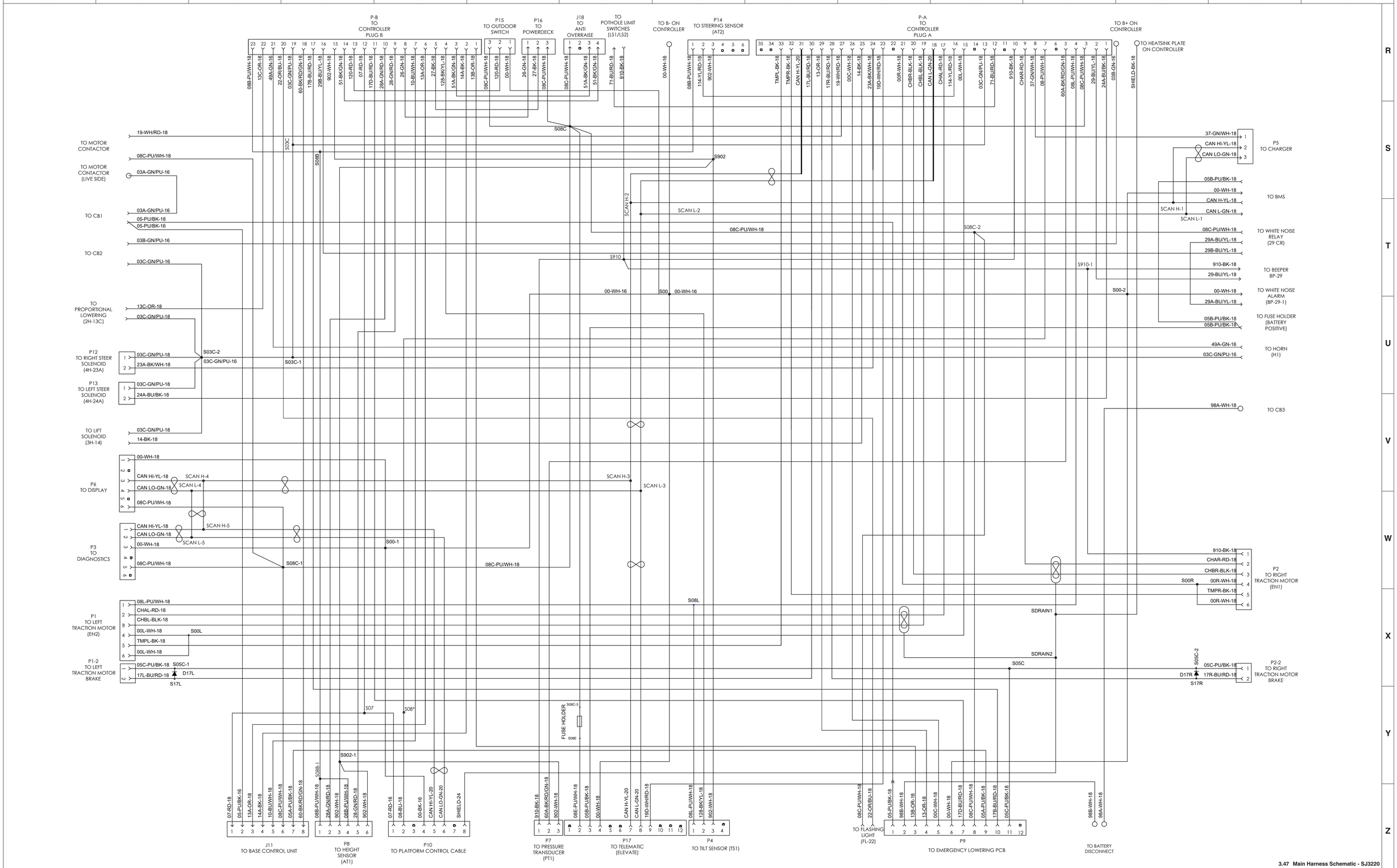

3.47 Main Harness Schematic - SJ3220 E, SJ3226 E, SJ3232 E, SJ4726 E, SJ4732 E

M259202AA-2

3.48 Main Harness Pinout - SJ4740 E

PIN NO.	COLOR	CIRCUIT NO.
1	BLUE/BLACK	24A
2	BLUE/YELLOW	29
3	PURPLE/WHITE	08C
4	PURPLE/WHITE	08L
5	BLACK/RED/GREEN	60A
6	N/U	N/U
7	PURPLE/WHITE	08
8	GREEN/WHITE	37
9	WHITE (PAIR)	CHAR
10	BLACK	910
11	N/U	N/U
12	BLUE/RED	71
13	GREEN/PURPLE	03C
14	N/U	N/U
15	WHITE	00L
16	YELLOW/RED	114
17	WHITE (PAIR)	CHAL
18	WHITE	CAN LO
19	BLACK (PAIR)	CHBL
20	BLACK (PAIR)	CHBR
21	WHITE	00R
22	N/U	N/U
23	WHITE/RED	19D
24	BLACK/WHITE	23A
25	BLACK	14
26	WHITE	00C
27	WHITE/RED	19
28	BLUE/RED	17R
29	ORANGE	13
30	BLUE/RED	17L
31	BROWN	CAN HI
32	BLACK	TMPR
33	BLACK	TMPL
34	N/U	N/U
35	N/U	N/U

P-A
TO CONTROLLER PLUG A

P-B
TO CONTROLLER PLUG B

PIN NO.	COLOR	CIRCUIT NO.
1	ORANGE	13B
2	BLACK	14A
3	BLACK/GREEN	51A
4	BLACK/YELLOW	128
5	N/U	N/U
6	ORANGE	13A
7	BLUE / WHITE	10
8	N/U	N/U
9	GREEN / RED	28
10	GREEN / RED	28A
11	BLUE/RED	17D
12	RED	07
13	RED	120
14	BLACK/GREEN	51
15	WHITE	902
16	BLUE/YELLOW	29B
17	BLUE/RED	17B
18	BLACK / RED / GREEN	60
19	GREEN/PURPLE	03C
20	ORANGE / BLUE	22
21	GREEN	49A
22	ORANGE	13C
23	PURPLE/WHITE	08B

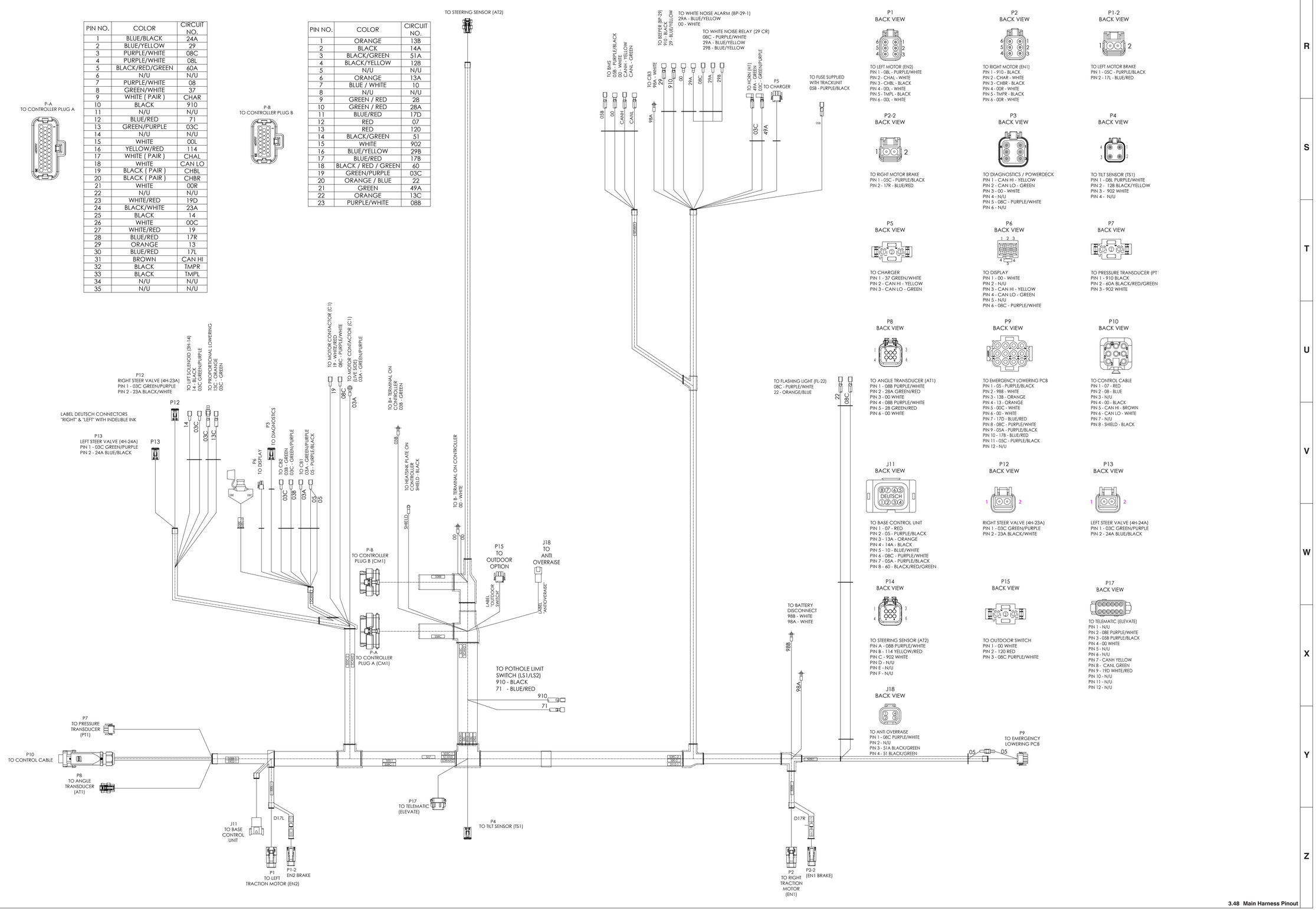

P1
BACK VIEW

TO LEFT MOTOR (EN2)
PIN 1 - 08L - PURPLE/WHITE
PIN 2 - CHAL - WHITE
PIN 3 - CHBL - BLACK
PIN 4 - 00L - WHITE
PIN 5 - TMPL - BLACK
PIN 6 - 00L - WHITE

P2
BACK VIEW

TO RIGHT MOTOR (EN1)
PIN 1 - 910 - BLACK
PIN 2 - CHAR - WHITE
PIN 3 - CHBR - BLACK
PIN 4 - 00R - WHITE
PIN 5 - TMPR - BLACK
PIN 6 - 00R - WHITE

P1-2
BACK VIEW

TO LEFT MOTOR BRAKE
PIN 1 - 05C - PURPLE/BLACK
PIN 2 - 17L - BLUE/RED

P2-2
BACK VIEW

TO RIGHT MOTOR BRAKE
PIN 1 - 05C - PURPLE/BLACK
PIN 2 - 17R - BLUE/RED

P3
BACK VIEW

TO DIAGNOSTICS / POWERDECK
PIN 1 - CAN HI - YELLOW
PIN 2 - CAN LO - GREEN
PIN 3 - 00 - WHITE
PIN 4 - N/U
PIN 5 - 08C - PURPLE/WHITE
PIN 6 - N/U

P4
BACK VIEW

TO TILT SENSOR (TS1)
PIN 1 - 08L PURPLE/WHITE
PIN 2 - 128 BLACK/YELLOW
PIN 3 - 902 WHITE
PIN 4 - N/U

P5
BACK VIEW

TO CHARGER
PIN 1 - 37 GREEN/WHITE
PIN 2 - CAN HI - YELLOW
PIN 3 - CAN LO - GREEN

P6
BACK VIEW

TO DISPLAY
PIN 1 - 00 - WHITE
PIN 2 - N/U
PIN 3 - CAN HI - YELLOW
PIN 4 - CAN LO - GREEN
PIN 5 - N/U
PIN 6 - 08C - PURPLE/WHITE

P7
BACK VIEW

TO PRESSURE TRANSDUCER (PT
PIN 1 - 910 BLACK
PIN 2 - 60A BLACK/RED/GREEN
PIN 3 - 902 WHITE

P8
BACK VIEW

TO ANGLE TRANSDUCER (AT1)
PIN 1 - 08B PURPLE/WHITE
PIN 2 - 28A GREEN/RED
PIN 3 - 00 WHITE
PIN 4 - 08B PURPLE/WHITE
PIN 5 - 28 GREEN/RED
PIN 6 - 00 WHITE

P9
BACK VIEW

TO EMERGENCY LOWERING PCB
PIN 1 - 05 - PURPLE/BLACK
PIN 2 - 98B - WHITE
PIN 3 - 13B - ORANGE
PIN 4 - 13 - ORANGE
PIN 5 - 00C - WHITE
PIN 6 - 00 - WHITE
PIN 7 - 17D - BLUE/RED
PIN 8 - 08C - PURPLE/WHITE
PIN 9 - 05A - PURPLE/BLACK
PIN 10 - 17B - BLUE/RED
PIN 11 - 05C - PURPLE/BLACK
PIN 12 - N/U

P10
BACK VIEW

TO CONTROL CABLE
PIN 1 - 07 - RED
PIN 2 - 08 - BLUE
PIN 3 - N/U
PIN 4 - 00 - BLACK
PIN 5 - CAN HI - BROWN
PIN 6 - CAN LO - WHITE
PIN 7 - N/U
PIN 8 - SHIELD - BLACK

J11
BACK VIEW

TO BASE CONTROL UNIT
PIN 1 - 07 - RED
PIN 2 - 05 - PURPLE/BLACK
PIN 3 - 13A - ORANGE
PIN 4 - 14A - BLACK
PIN 5 - 10 - BLUE/WHITE
PIN 6 - 08C - PURPLE/WHITE
PIN 7 - 05A - PURPLE/BLACK
PIN 8 - 60 - BLACK/RED/GREEN

P12
BACK VIEW

RIGHT STEER VALVE (4H-23A)
PIN 1 - 03C GREEN/PURPLE
PIN 2 - 23A BLACK/WHITE

P13
BACK VIEW

LEFT STEER VALVE (4H-24A)
PIN 1 - 03C GREEN/PURPLE
PIN 2 - 24A BLUE/BLACK

P14
BACK VIEW

TO STEERING SENSOR (AT2)
PIN A - 08B PURPLE/WHITE
PIN B - 114 YELLOW/RED
PIN C - 902 WHITE
PIN D - N/U
PIN E - N/U
PIN F - N/U

P15
BACK VIEW

TO OUTDOOR SWITCH
PIN 1 - 00 WHITE
PIN 2 - 120 RED
PIN 3 - 08C PURPLE/WHITE

P17
BACK VIEW

TO TELEMATIC (ELEVATE)
PIN 1 - N/U
PIN 2 - 08E PURPLE/WHITE
PIN 3 - 05B PURPLE/BLACK
PIN 4 - 00 WHITE
PIN 5 - N/U
PIN 6 - N/U
PIN 7 - CANH YELLOW
PIN 8 - CANL GREEN
PIN 9 - 19D WHITE/RED
PIN 10 - N/U
PIN 11 - N/U
PIN 12 - N/U

J18
BACK VIEW

TO ANTI OVERRAISE
PIN 1 - 08C PURPLE/WHITE
PIN 2 - N/U
PIN 3 - 51A BLACK/GREEN
PIN 4 - 51 BLACK/GREEN

M2592034A-3

3.49 Main Harness Schematic - SJ4740 E

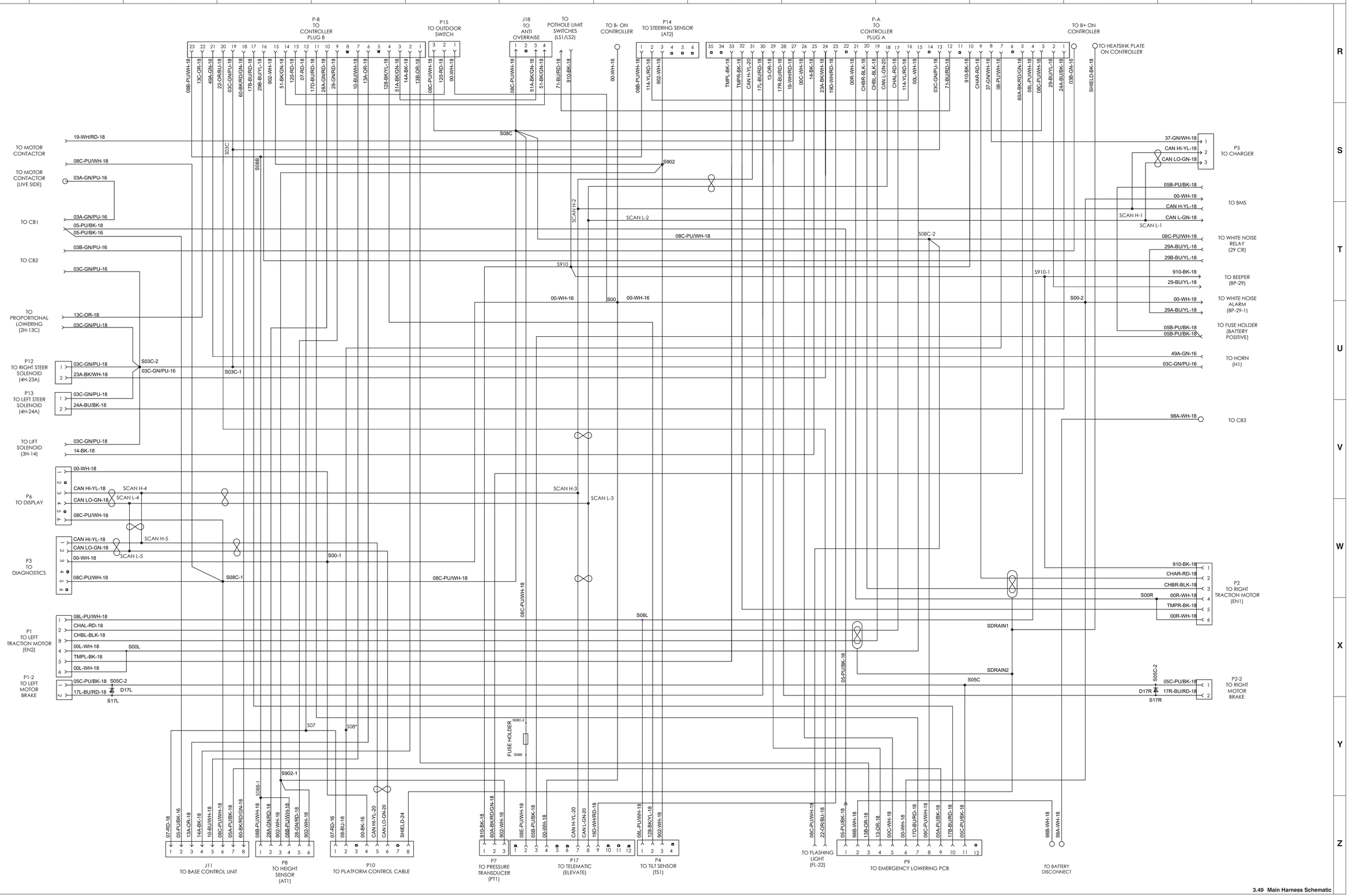

M2592034A-2

Section 4 – Troubleshooting Information

4.1 Introduction

The following pages contain a table of Troubleshooting for locating and correcting most service trouble which can develop. Careful and accurate analysis of the systems listed in the table of Troubleshooting will localize the trouble more quickly than any other method. This manual cannot cover all possible troubles and deficiencies that may occur. If a specific trouble is not listed, isolate the major component in which the trouble occurs, isolate whether the problem is electrical or hydraulic, and then isolate and correct the specific problem.

The content of this section is separated into “probable cause” and “remedy.” The information in the left-hand column, preceded by a number, represents the “probable cause.” The information in the right-hand column, in bold text, represents the “remedy” to the “probable cause” directly beside it. See the example below for clarification.

1. Probable cause	**Remedy**

4.2 Electrical System

NOTE

Functions may be disabled by the load sense system. Please first make sure that the scissor is fully lowered, the platform is free of added weight, and there are no faults in the load sense system.

Functions may be disabled by the machine control system. Please first make sure that the machine is on a firm level surface, the charger is not plugged in, and check for any messages or codes displayed. Refer to section 5.7-13 Display Module Error Codes.

When checking voltages, the battery disconnect switch must be in the ON position, both base and platform emergency stop switches pulled out, and the key in the appropriate base or platform position. Engage the function that you are troubleshooting.

4.2-1 All controls inoperative

1. Battery cables loose/disconnected.	**Tighten or connect battery cables.**
2. Battery discharged or defective.	**Charge battery or replace if defective.**
3. Fuse F1 defective or open.	**Replace fuse.**
4. Loose or broken B+ cable 03 from batteries to battery disconnect switch S1.	**Check continuity. Test for 24V supply voltage between wire #03A and wire #00. Replace if defective.**
5. Open or defective battery disconnect switch S1.	**Close switch. Replace if defective.**
6. Loose or broken wire #03A from battery disconnect switch S1 to motor contactor C1 common.	**Check continuity. Test for 24V supply voltage between wire #03A and wire #00. Replace if defective.**
7. Loose or broken wire #03A from motor contactor C1 to circuit breaker CB1.	**Check continuity. Test for 24V supply voltage between wire #03A and wire #00. Replace if defective.**
8. Circuit breaker CB1 tripped or defective.	**Reset breaker, check for defective wiring. Replace if defective.**
9. Loose or broken wire #05 from circuit breaker CB1 to base emergency stop switch S28.	**Check continuity. Test for 24V supply voltage between wire #05 and wire #00. Replace if defective.**
10. Open or defective base emergency stop switch S28.	**Pull out to close switch. Replace if defective.**
11. Loose or broken wire #05A from base emergency stop switch S28 to base key switch S10.	**Check continuity. Test for 24V supply voltage between wire #05A and wire #00. Replace if defective.**
12. Loose or broken #05A wires between base key switch S10 terminals.	**Check continuity. Test for 24V supply voltage between wire #05A and wire #00. Replace if defective.**
13. Open or defective key select switch S10.	**Turn switch to base or platform position to close. Replace contact block or keyswitch if defective.**
14. Loose or broken wire #08C from base key switch S10 to motor contactor C1 coil +.	**Check continuity. Test for 24V supply voltage between wire #08C at contactor and wire #00. Replace if defective.**

15. Loose or broken wire #08C from motor contactor C1 coil + to machine controller pin A3.	**Check continuity. Test for 24V supply voltage between wire #08C and wire #00. Replace if defective.**
16. Loose or broken wire 07 from base key switch to machine controller pin B12.	**Check continuity. Test for 24V supply voltage between wire #07 and wire #00. Replace if defective.**
17. Loose or broken wire 07 from base key switch to upper control box E-Stop switch S4.	**Check continuity. Test for 24V supply voltage between wire #07 and wire #00. Replace if defective.**
18. Open or defective upper control box E-stop switch S4.	**Close switch. Replace if defective.**
19. Loose or broken wire 08 from upper control box E-Stop switch S4 to machine controller pin A7.	**Check continuity. Test for 24V supply voltage between wire #08 and wire #00. Replace if defective.**
20. Loose or broken wire 00 from machine controller B- to battery negative.	**Check continuity. Replace if defective.**

4.2-2 No lift or steer functions

1. Loose or broken wire 19 from motor contactor C1 coil negative to machine controller pin A27.	**Check continuity. Test for 24V supply voltage between wire #19 and wire #00. Replace if defective.**
2. Defective motor contactor C1.	**Replace if defective.**
3. Loose or broken wire 03B from motor contactor C1 N.O. Contact to machine controller B+.	**Check continuity. Test for 24V supply voltage between wire #03B and wire #00. Replace if defective.**
4. Loose or broken wire 03B from machine controller B+ to pump motor positive terminal.	**Check continuity. Test for 24V supply voltage between wire #03B and wire #00. Replace if defective.**
5. Loose or broken ground wire from machine controller P- to pump motor negative terminal.	**Check continuity. Replace if defective.**
6. Loose or broken wire 03B from motor contactor C1 N.O. Contact to circuit breaker CB2.	**Check continuity. Test for 24V supply voltage between wire #03B and wire #00. Replace if defective.**
7. Defective or tripped circuit breaker CB2.	**Check for short circuits, Reset Circuit Breaker. Replace breaker if defective.**
8. Loose or broken wire 03C from circuit breaker CB2 to machine controller pin B19.	**Check continuity. Test for 24V supply voltage between wire #03C and wire #00. Replace if defective.**
9. Loose or broken wire 03C from circuit breaker CB2 to lift (3H-14), right steer (4H-23) and left steer (4H-24) coils.	**Check continuity. Test for 24V supply voltage between wire #03C and wire #00. Replace if defective.**

4.2-3 No lift from base or platform

1. Loose or broken wire 14 from lift coil 3H-14 to machine controller pin A25.	**Check continuity. Test for 24V supply voltage between B+ and wire #14. Replace if defective.**
2. Defective coil 3H-14.	**Replace coil.**
3. Loose or broken wire 08D from machine controller pin A4 to tilt switch TS1 pin 1.	**Check continuity. Test for 24V supply voltage between wire 08D and wire #00C. Replace if defective.**
4. Loose or broken wire 902 from machine controller pin B15 to tilt switch TS1 pin 3.	**Check continuity. Test for 24V supply voltage between B+ and wire #902. Replace if defective.**
5. Machine not level, or level switch not calibrated or defective.	**Level machine and check functionality. Perform tilt switch calibration. Check switch and replace if defective.**
6. Loose or broken wire 128 from machine controller pin B4 to tilt switch TS1 pin 2.	**Check continuity. Test for 24V supply voltage between wire 128 and wire #00C. Replace if defective.**

4.2-4 No lift from base controls

1. Loose or broken wire 10 from base key switch S10 to lift/lower switch S2.	**Check continuity. Test for 24V supply voltage between wire 10 and wire #00. Replace if defective.**
2. Open or defective key select switch S10.	**Close switch. Replace if defective.**
3. Loose or broken wire 10 from base key switch S10 to machine controller pin B7.	**Check continuity. Test for 24V supply voltage between wire 10 and wire #00. Replace if defective.**
4. Loose or broken wire 14A from lift/lower switch S2 to machine controller pin B2.	**Check continuity. Test for 24V supply voltage between wire 14A and wire #00. Replace if defective.**
5. Open or defective lift/lower switch S2.	**Close switch. Replace if defective.**

4.2-5 No lower from base or platform

1. Loose or broken wire 13 from machine controller pin A4 to machine controller pin A29.	**Check continuity. Test for 12V supply voltage between wire 13 and wire #00C. Replace if defective.**
2. Loose or broken wire 00C from lower coil 2H-13 to machine controller pin A26.	**Check continuity. Test for 12V supply voltage between wire 13 and wire #00C. Replace if defective.**
3. Defective coil 2H-13.	**Replace coil.**
4. Defective emergency lowering PCB board.	**Replace emergency lowering module.**

4.2-6 No lower from base controls

1. Loose or broken wire 13A from lift/lower switch S2 to machine controller pin B6.	**Check continuity. Test for 24V supply voltage between wire 13A and wire #00. Replace if defective.**
2. Open or defective lift/lower switch S2.	**Close switch. Replace if defective.**

4.2-7 No functions from platform controls

1. Loose or broken 08 wire from E-stop switch S4 to lift/off/drive switch S3.	**Check continuity. Test for 24V supply voltage between wire 08 and wire #00. Replace if defective.**
2. Loose or broken 08 wire from E-stop switch S4 Joystick pin P-17.	**Check continuity. Test for 24V supply voltage between wire 08 and wire #00. Replace if defective.**
3. Defective enable switch or wiring on upper control joystick.	**Check wiring and switch. Repair or replace if defective.**
4. Defective ground wire 00 from machine controller pin P-32 to B-.	**Check continuity. Replace if defective.**
5. Defective joystick.	**Replace if defective.**

4.2-8 No lift/lower from platforms controls

1. Loose or broken 09 wire from lift/off/drive switch S3 to joystick pin P-23	**Check continuity. Test for 24V supply voltage between wire 09 and wire #00. Replace if defective.**
2. Open or defective lift/off/drive switch S3	**Close switch. Replace if defective.**

4.2-9 No steer left

1. Loose or broken wire 24 from steer coil 4H-24 to machine controller pin A1.	**Check continuity. Test for 24V supply voltage between B+ and wire #24. Replace if defective.**
2. Defective coil 4H-24.	**Replace coil.**
3. Defective left steer switch or wiring on upper control joystick.	**Check wiring and switch. Repair or replace if defective.**

4.2-10 No steer right

1. Loose or broken wire 23 from steer coil 4H-23 to machine controller pin A24.	**Check continuity. Test for 24V supply voltage between B+ and wire #23. Replace if defective.**
2. Defective coil 4H-23.	**Replace coil.**
3. Defective right steer switch or wiring on upper control joystick.	**Check wiring and switch. Repair or replace if defective.**

4.2-11 No drive

1. Loose or broken 12 wire from lift/off/drive switch S3 to joystick pin P-07.	**Check continuity. Test for 24V supply voltage between wire 12 and wire #00. Replace if defective.**
2. Open or defective lift/off/drive switch S3.	**Close switch. Replace if defective.**
3. Loose or broken 05A wire from base E-stop S28 to 30ACR brake relay pin 30 and/or pin 86.	**Check continuity. Test for 24V supply voltage between wire 05A and wire #00. Replace if defective.**
4. Loose or broken wire 17B from controller pin B17 to PCB board pin P-10.	**Check continuity. Test for 24V supply voltage between wire 17B and wire #00. Replace if defective.**
5. Defective 30ACR brake relay.	**Check relay Replace if defective.**
6. Loose or broken wire 05C on PCB board pin P-11 to brake BRK2 pin J1-1and/or BRK1 pin J2-1.	**Check continuity. Test for 24V supply voltage between wire 05C and wire #00. Replace if defective.**
7. Loose or broken wire 17L from BRK2 pin J1-2 to machine controller pin A30.	**Check continuity. Test for 24V supply voltage between B+ and wire #17L. Replace if defective.**
8. Loose or broken wire 17R from BK1 pin J2-2 to machine controller pin A28.	**Check continuity. Test for 24V supply voltage between B+ and wire #17R. Replace if defective.**
9. Defective brake BK1 or BK2.	**Check brakes. Replace if defective.**
10. Loose or defective wiring from machine controller pins WS, VS, and/or US to left traction motor.	**Check continuity. Replace if defective.**
11. Loose or defective wiring from machine controller pins WM, VM, and/or UM to right traction motor.	**Check continuity. Replace if defective.**
12. Defective traction motor.	**Check motors. Replace if defective.**

4.3 Hydraulic System

4.3-1 All hydraulic controls inoperative (no lift or steer functions)

1. Pump motor not engaged.	**Refer to Electrical troubleshooting. Replace pump motor if defective.**
2. Pump motor coupler defective.	**Check coupler. Replace if defective**
3. Defective pump P1.	**Check pump output. Replace if defective.**
4. System relief valve RV1 set too low or stuck open.	**Check and adjust valve setting. Replace if defective.**
5. Defective 30ACR brake relay.	**Check relay Replace if defective.**

4.3-2 No lift function

1. Stuck or defective lift valve 3H-14.	**Clean valve. Check o-rings on valve. Check operation of valve. Repair or replace valve as required.**
2. Defective lift Cylinder assembly.	**Check cylinders. Repair or replace as required.**
3. Stuck or defective RV1.	**Adjust or replace if defective.**

4.3-3 No lower function

1. Stuck or defective lift valve 3H-14.	**Clean valve. Check o-rings on valve. Check operation of valve. Repair or replace valve as required. NOTE: machine may lower slowly and a whine from the pump/motor may be heard. Also, machine may lift while operating steering.**
2. Stuck or defective lower valve 2H-13.	**Clean valve. Check o-rings on valve. Check operation of valve. Repair or replace valve as required.**
3. Blocked lower orifice OR1.	**Check orifice. Clean or replace as required**
4. Defective lift cylinder assembly.	**Check cylinders. Repair or replace as required.**

4.3-4 No steer left and/or right

1. Stuck or defective steer valve 4H-23/4H-24.	**Clean valve. Check o-rings on valve. Check operation of valve. Repair or replace valve as required.**
2. Steer cylinder C5 bypassing, or mechanically binding.	**Check cylinder and all steer linkage. Repair or replace defective components as required.**
3. Stuck or defective RV1.	**Adjust or replace if defective.**

Notes

Section 5 – Procedures

NOTE

The illustrations in this manual are for instructional purposes only. The models and components shown may appear somewhat different from those on your actual MEWP.

5.1 Safety and workmanship

Your safety, and that of others, is the first consideration when doing maintenance on equipment. Always be conscious of weight. Never attempt to move heavy parts without the aid of a mechanical device. Do not allow heavy objects to rest in an unstable position. When you raise a part of the equipment, make sure it has sufficient support.

Unless specifically noted otherwise, before beginning any procedure:

1. Park the MEWP on a firm, level surface. Fully lower the machine.
2. Push in the emergency stop buttons on the platform control console and the base control console.
3. Turn the off/platform/base key switch to the off position. Remove the key.
4. Turn the main power disconnect switch to the off position.

After you complete a procedure which involves the modification, adjustment, or replacement of a hydraulic or electrical component, do all of the function tests given in your unit's Operation Manual.

⚠ WARNING

Fall hazard. Use the three points of contact principle when you use the MEWP to enter or exit the platform. If you do not obey, there is a risk of death or serious injury.

⚠ WARNING

Do not operate the platform controls without the correct fall protection attached to the designated location in the platform. Failure to do so could result in death or serious injury!

⚠ WARNING

Make sure there are no people or obstructions in the test area, and there is sufficient space for the scissor and drive functions required for the given procedures.

5.2 Platform

5.2-1 Joystick 32-pin connector chart

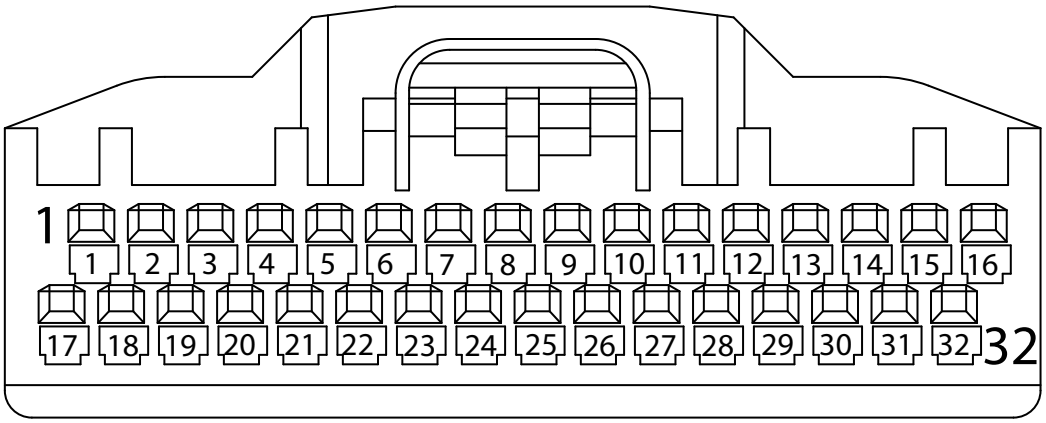

Pin	Wire # and Colour	Wire Function
P-7	12 Brown/Red	24V input from S3 Lift/Off/Drive switch for drive select
P-8	49 Green	24V input from S8 horn
P-13	290 Purple	24V output to PL-5 SOC (State Of Charge) light. Pulses just before lift cutout (below 18.8 V (lead battery) or 21.0 V (AGM battery) for over 3 seconds). Solid once lift cut out is active.
P-14	9A Orange	24V output to PL-4 Lift Light when lift selected
P-15	60A Black/Red/Green	24V output to PL-1 Overload Light (Pulsed when overloaded)
P-16	08 Purple/White	24V input from S4 Emergency Stop switch
P-17	08 Purple/White	24V input from S4 Emergency Stop switch
P-18	09B Orange	24V input from S22 SGLE switch when switch is active
P-20	08E Purple/White	24V input from S22 SGLE switch when switch is not active
P-23	09 Orange/Red	24V input from S3 Lift/Off/Drive switch for lift select
P-24	18 Red	24V input from S27 Mid Speed switch
P-26	CANL White	Communication CAN L
P-27	CANH Brown	Communication CAN H
P-31	12A Brown	24V output to PL-3 Drive Light when drive selected
P-32	00 White	B-

5.2-2 Gate spring hinge adjustment

1. The tension of the spring hinges should be such that when you open the gate halfway and release it automatically closes and latches.
2. To adjust the tension of the spring hinges, first remove the safety locking screw from each hinge. Keep the screws for installation later.

NOTE

You need two hands to adjust the tension on the spring hinge.

3. To increase the tension, insert a 5/32" hex wrench in the screw socket. Turn the wrench clockwise until you get to the correct tension. Then if needed, turn it a small amount more to align the locking screw holes.
4. Hold the wrench in place and install the locking screw.
5. Release the wrench.

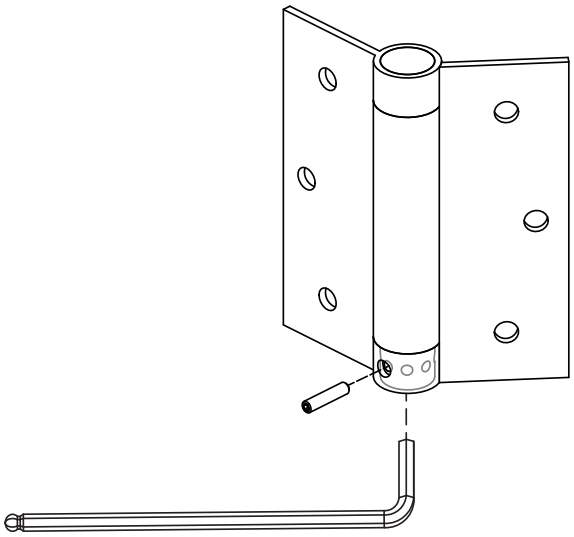

6. Adjust the tension on all of the hinges until the gate releases and latches from a half-open position.

5.2-3 Platform mounting hardware

If damage is found during an inspection of the platform mounting hardware, or following maintenance or repair of the platform mounting hardware and/or removal of the platform, you must:

1. Inspect the platform, scissors, and the attachment area. Make sure you also do a check for damage to the threads on the scissor arm bracket ❶. Remove any debris, oils or grease from the threads.
2. Replace all of the platform mounting hardware ❷ (bolts, flat washers, and spring washers) with new Skyjack-approved parts. Refer to the parts manual for the part numbers for your specific MEWP.
3. Apply a high-strength threadlocker (Loctite 270 or equivalent) to each bolt. Refer to the threadlocker manufacturer instructions for the specific requirements on its use.
4. Insert all of the bolts evenly. Then use a correctly calibrated torque wrench set to 41 Nm (30 ft-lb) to tighten each bolt. Use a smooth, even motion until an indication (audible click) is heard and felt.
5. When all of the bolts are torqued, repeat the tightening sequence to confirm the torque.

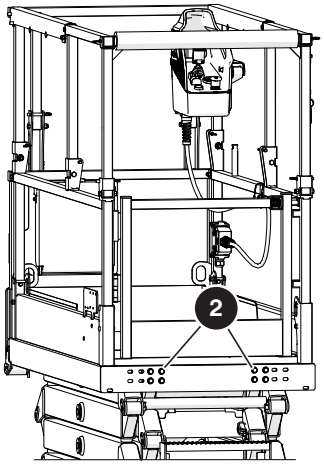

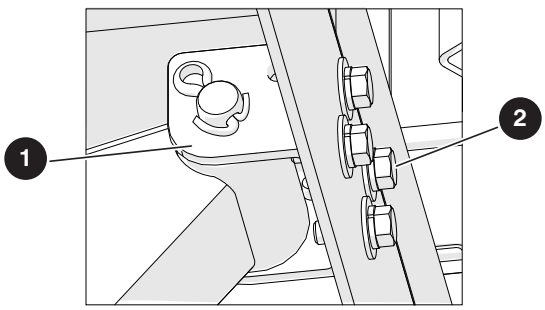

5.3 Hydraulic Tray

5.3-1 Tightening and torque recommendations for hydraulic couplings and hoses

General work practices

1. All components must be free of damage or contamination. O-rings cannot be reused anytime the component has been installed beyond finger tight. Clean or replace components, as required.
2. Over-tightening a coupling may result in overstressing and/or cracking, and may lead to leaking or failure.
3. When tightening hose couplings, make sure the hose does not twist on the adapter. Twisting will shorten the hose life and scar the sealing surfaces of swivel type couplings (JIC, 45°, etc.), which can create leaks.
4. When tightening hose couplings, use a torque wrench (with a crow's foot) on the hose end hex swivel nut, and a standard box wrench on the hose end stem hex to hold the hose from twisting.

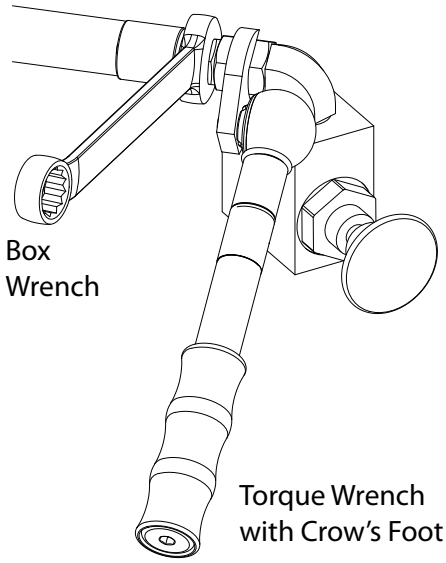

5. Lubricate all o-ring surfaces with suitable hydraulic oil prior to installation in the flange head and o-ring seal grooves. This will minimize the possibility of damage to the o-ring when installed.
6. Install 45° and 90° hydraulic hose ends first, then align the direction and tighten. Adjust the swivel nut on the straight hose end before tightening to create the desired flow.

Torquing using a torque wrench

1. This method applies to JIC (37°) and FFOR (flat face o-ring) hose ends and fittings, when the components are accessible with a torque wrench and crow's foot tools.
2. Align the hose end or fitting to the mating component.
3. Install the nut two or three turns by hand to make sure the alignment is correct. Jiggle the hose while tightening it to make sure the faces contact fully.
4. Using a correctly calibrated torque wrench, tighten the coupling using a smooth, even motion until an indication (audible click) is heard and felt. Do NOT over tighten it. For the recommended torque values, refer to *2.4 Torque specifications for hydraulic couplings & hoses*.
5. Apply a drop of torque seal to the connection.

Torquing using the flats from wrench resistance method

1. This method applies to JIC (37°) and FFOR (flat face o-ring) hose ends only, when the components are not accessible with a torque wrench or crow's foot tools, or when a correctly calibrated torque wrench is not available.
2. Align the hose end or fitting to the mating component.
3. Install the swivel hose end nut hand tight to the fitting to make sure the alignment is correct. Jiggle the hose while tightening it to make sure the faces contact fully.
4. Tighten the nut using a box wrench until minor resistance is felt.
5. Note the position of the nut relative to the fitting with a marking device (i.e., paint marker).

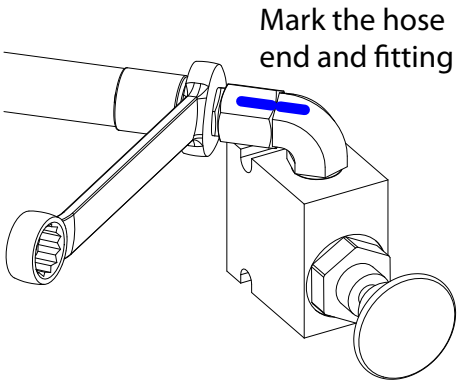

6. Referencing the chart below, use a second box wrench to tighten the nut the appropriate number of flats past the mark. Do NOT over tighten it.

FLATS FROM WRENCH RESISTANCE CHART for JIC Hose Ends			
Size		FFWR	
Dash	Frac. (in.)	37° Tube Nut	Swivel Nut
-4	1/4"	2	1.5
-5	5/16"	2	2
-6	3/8"	1.5	1.5
-8	1/2"	1.5	1.25
-10	5/8"	1.5	-
-12	3/4"	1.25	-
-16	1"	1	-
-20	1 1/4"	1	-
-24	1 1/2	1	-
-32	2"	1	-

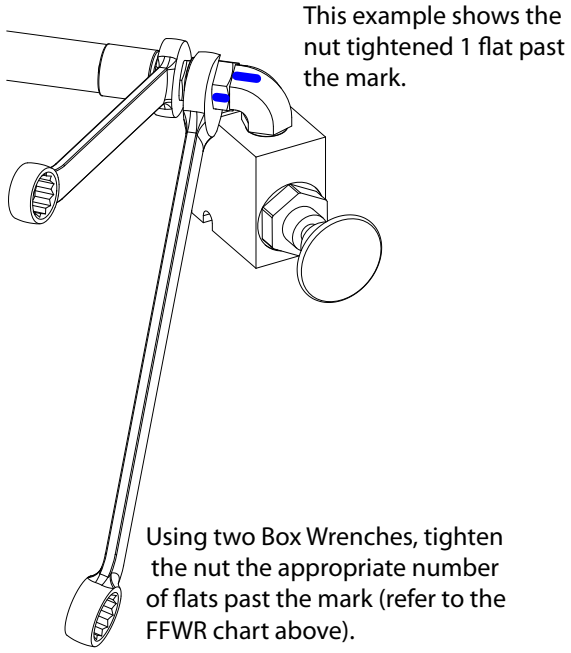

7. Apply a drop of torque seal to the connection.

5.3-2 System relief (RV1) adjustment

IMPORTANT

Make sure there are no active faults on the display before you do this adjustment.

1. Lower the platform completely.
2. Load the platform with the capacity that is found on the machine's serial plate.
3. At the main manifold loosen the locknut on the system relief valve RV1.
4. Insert an Allen wrench in the stem of RV1 and turn the valve stem out one turn.
5. Use the base controls to lift the platform and at the same time slowly turn the stem of RV1 in until the scissor stack just starts to lift, then turn the valve in an additional ½ turn. If you need to repeat the adjustment, lower the platform to the stowed position and repeat.
6. Fully lower the platform and make sure that it lifts the 100% capacity

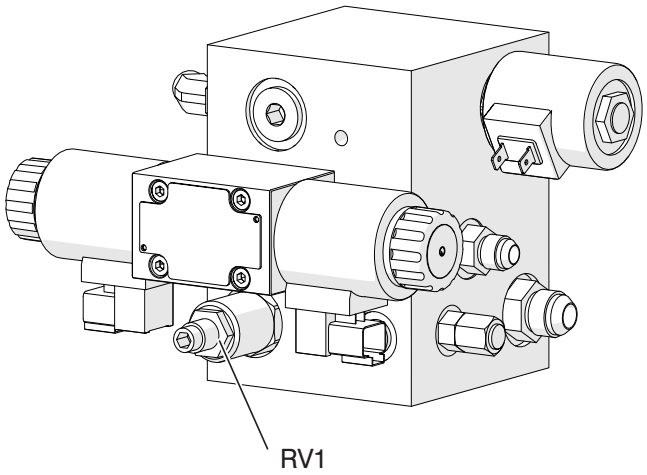

5.4 Base

5.4-1 Replace the pothole compression rod

New compression rods must be adjusted to the correct height for the pothole protection system to work correctly.

If the compression rod is too long

- There is a risk that the compression rod gets bent when the scissor stack lowers.
- The machine may not drive at all at certain heights, and the Skycoded display shows "143-POTHO ERR"

If the compression rod is too short

- The pothole bar will not fully retract.

Adjust the compression rod

1. Loosen the lock nut then adjust the carriage bolt until the overall length of the compression rod assembly matches the dimensions shown below.
2. The overall length is measured from the tip of the carriage bolt to the bottom of the compression rod.

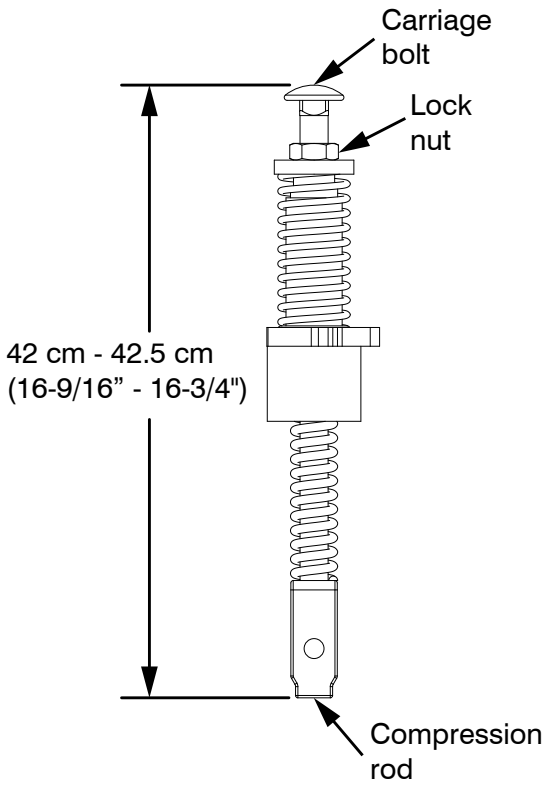

3. Hold the carriage bolt in place and tighten the lock nut.
4. Do a final check of the overall length and make sure it is still correct.

Test the compression rod

1. Raise the platform to an approximate height of 2.2 m to 2.8 m (7' 4" to 9' 2") and try to drive the MEWP.
2. If the MEWP does not drive and the Skycoded display shows “143-POTHO ERR”, make sure the overall length of the compression rods is correct, and the pothole limit switches are installed correctly. Refer to *5.4-2 Replace and adjust the pothole limit switches (LS1 & LS2)*.

5.4-2 Replace and adjust the pothole limit switches (LS1 & LS2)

Machine preparation

1. Park the MEWP on a firm level surface.
2. Chock or block the wheels so the MEWP does not roll forward or backward.

Remove the limit switches

1. Raise the platform until the pothole bars are deployed.
2. Swing out the hydraulic tray and the battery tray to gain access to the pothole limit switches below the base.
3. Remove the bolts, washers and nuts (x 2) that secure the limit switches to the pothole lock plates. Set the hardware aside.

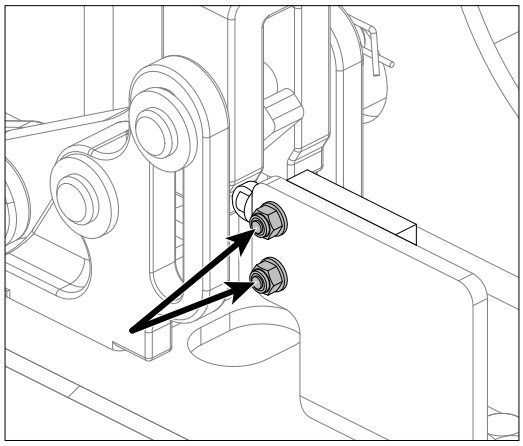

4. Remove the bolts and washers (x 2) that secure the lock plates to the base. Set the hardware aside.

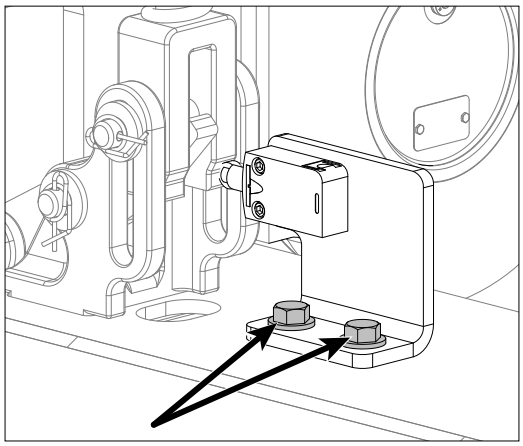

5. Remove the limit switches and free the limit switch cables. Cut tie wraps as necessary.
6. Follow the cable into the main harness.
7. Disconnect the limit switch wires from the main harness. Discard the limit switches.

Replace the limit switches

1. Install the new limit switches (210227 for the battery tray and 210226 for the hydraulic tray) on the lock plates using the hardware removed earlier.
2. Make sure the distance between bottom of the limit switches and the top surface of the lock plates is 4.13 cm (1-5/8").

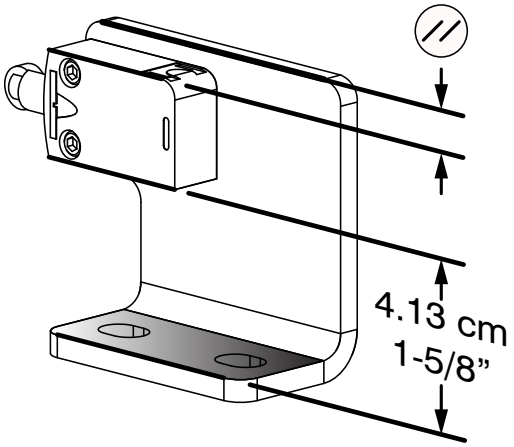

3. Make sure the limit switches are parallel with the edge of the lock plates.
4. Tighten the hardware on the limit switches.
5. Loosely install the lock plates onto the base using the hardware removed earlier.

Connect the limit switch wires

1. Route the new limit switch cables along the same path as the old ones to the main harness. Use tie wraps to secure the cables at regular intervals.
2. Plug the spade connectors into the same wire numbers. The #72 wires from each limit switch connect to each other. The #71 and #910 wires from the limit switches connect to the respective wires on the main harness.

Adjust the limit switches

1. Make sure the platform is still raised. Then use the slotted holes in the lock plates to move them back and forth until the limit switch plungers are barely touching the compression rods. Make sure the plungers are not pushed in.

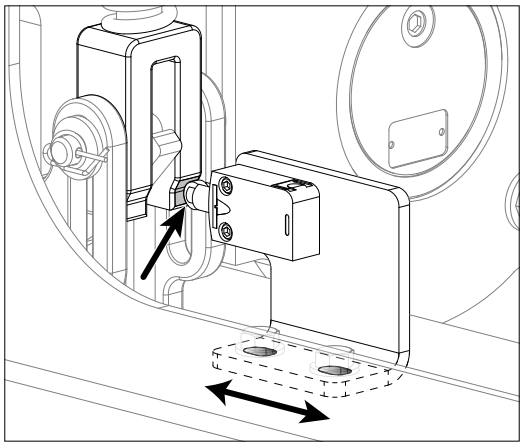

2. Tighten the hardware to secure the lock plates to the base. Make sure the limit switches do not move while you tighten the bolts, and the retaining pins of the plunger roller are fully visible.

Test the limit switches

Limit switch		Trip point
S3220 E		
LS1	Pothole - battery tray side	2.04 m (6' 8-5/16")
LS2	Pothole - hydraulic tray side	
S3226 E		
LS1	Pothole - battery tray side	2.43 m (7' 11-5/8")
LS2	Pothole - hydraulic tray side	
S4726 E		
LS1	Pothole - battery tray side	2.62 m (8' 7-5/32")
LS2	Pothole - hydraulic tray side	
S4732 E		
LS1	Pothole - battery tray side	3.07 m (10' 27/32")
LS2	Pothole - hydraulic tray side	
S4740 E		
LS1	Pothole - battery tray side	3.86 m (12' 8")
LS2	Pothole - hydraulic tray side	

1. Place a block, approximately 3.75 cm (1-1/2") high, under the hydraulic tray.
2. Raise the platform approximately 2 to 3 m (7' to 10') until the pothole protection limit switches are activated.
3. Select the “TESTER MAIN” menu on the display module.
4. Scroll to the “DIG. INPUTS” menu.
5. Scroll to DI14_A12 to observe the pothole limit switch status. Make sure the I/O is correct.
   - OFF when the pothole protection is on a block.
   - ON when the pothole protection is fully lowered.
6. Attempt to drive forward or reverse. The MEWP should not move forward or backward when the pothole protection bar is on a block.

5.4-3 Pothole bar replacement/removal for servicing

Prepare the machine

1. Make sure the MEWP is on firm, level ground.
2. Chock or block the wheels to keep the MEWP from rolling forward or backward.

Tools necessary

- Needle nose pliers

How to install or remove a Rue Ring

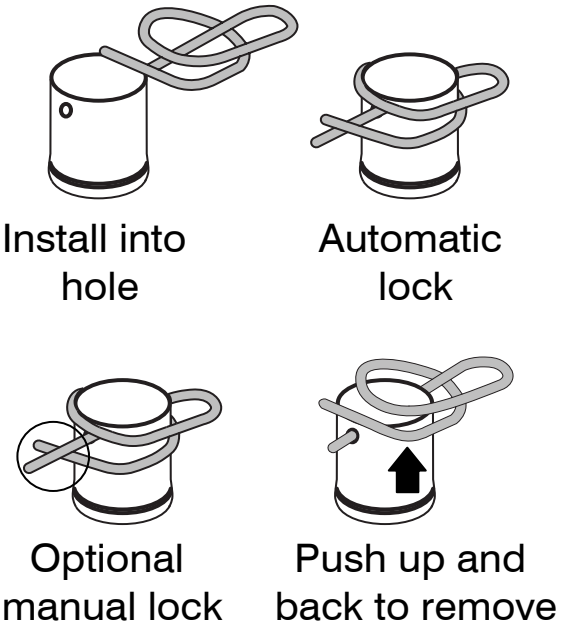

Installation instructions

1. Raise the scissor stack until the pothole bars are deployed and there is no tension on either pothole plunger.

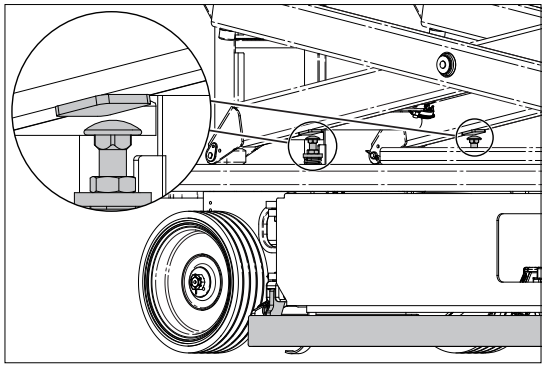

2. Remove the rue ring cotter pins and hardware that connect the pothole bar to the hydraulic and battery tray. Keep the pins and hardware.

3. Make sure the bushing is secured. Do an inspection on the bushing for excessive wear. Replace it if necessary.

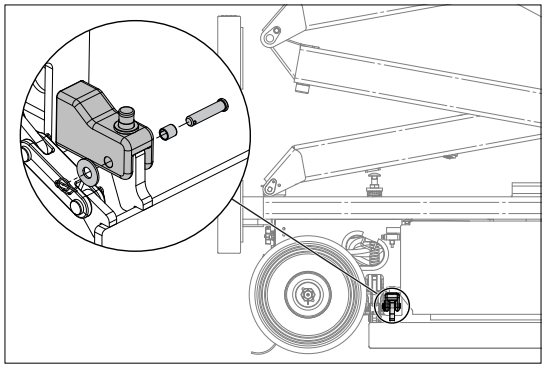

4. Pull the pothole bar to allow access to the next rue ring cotter pin.
5. Remove the pins and hardware that connect the pothole bar to the pivot point from the pothole protection assembly and base weldment. Keep the pins and hardware.

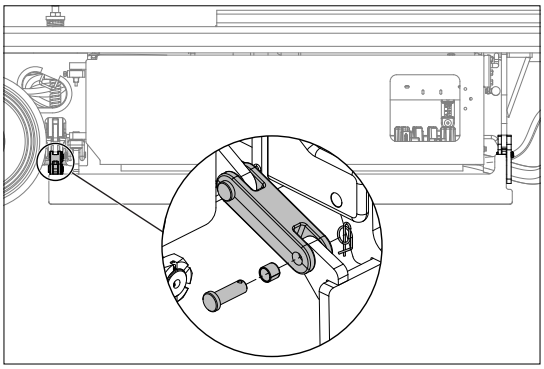

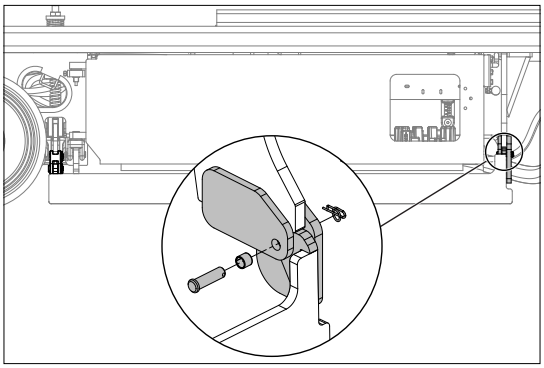

6. Remove and discard the old pothole bar, if you plan to replace it.
7. Install a new pothole bar.
8. Install the pins and hardware in the pivot points on the pothole assembly and base.

Test the pothole bars

1. Raise and lower the scissor stack a few times to make sure the pothole bars deploy correctly.

5.4-4 Replace the steer sensor

1. Park the MEWP with the front wheels straight.
2. Disconnect the steer sensor from the electrical harness.

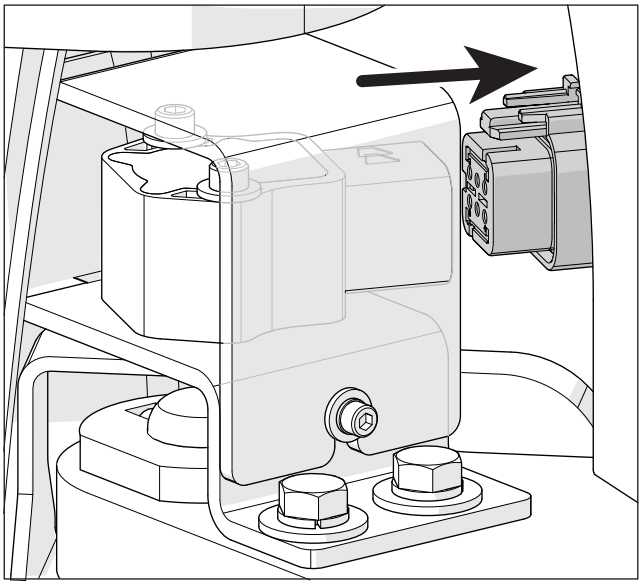

3. Remove the two sets of hardware securing the steer sensor bracket to the base. Lift the sensor assembly away.

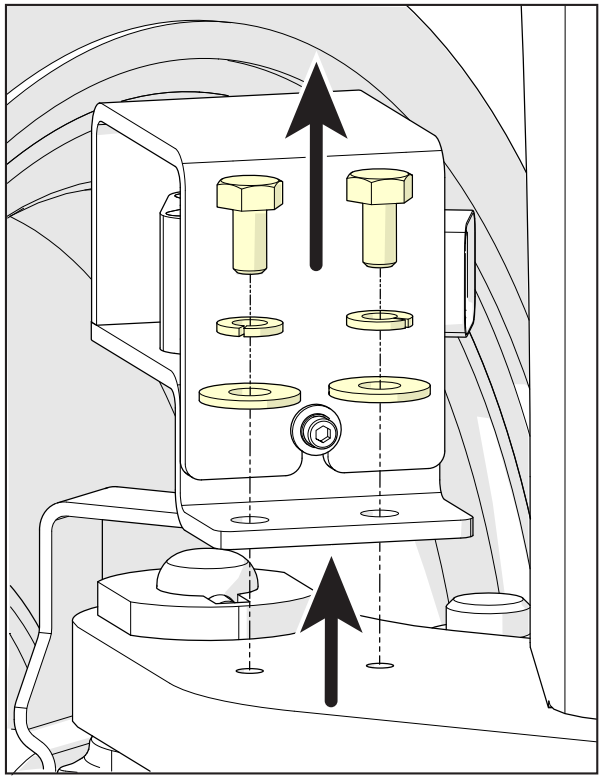

4. Remove the bolt and washers securing the sensor cover to the bracket. Lift the cover away.

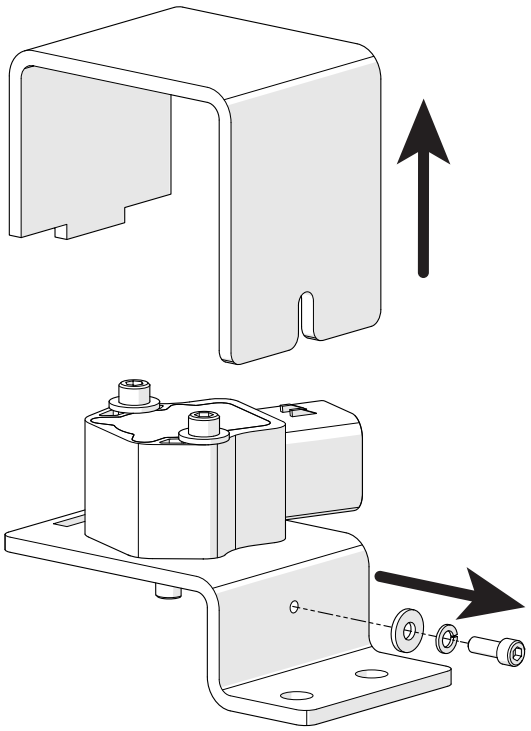

5. Remove the two sets of hardware securing the sensor to the bracket. Remove and throw away the sensor.

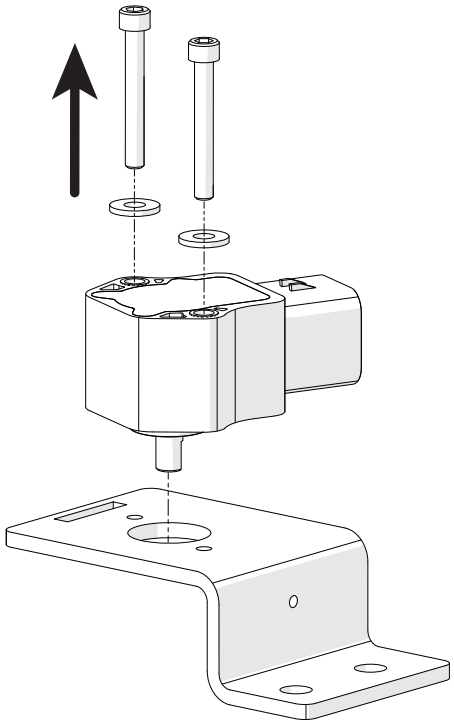

6. Set a new sensor in place. Apply blue threadlocker to the two sets of hardware removed earlier. Secure the sensor to the bracket.

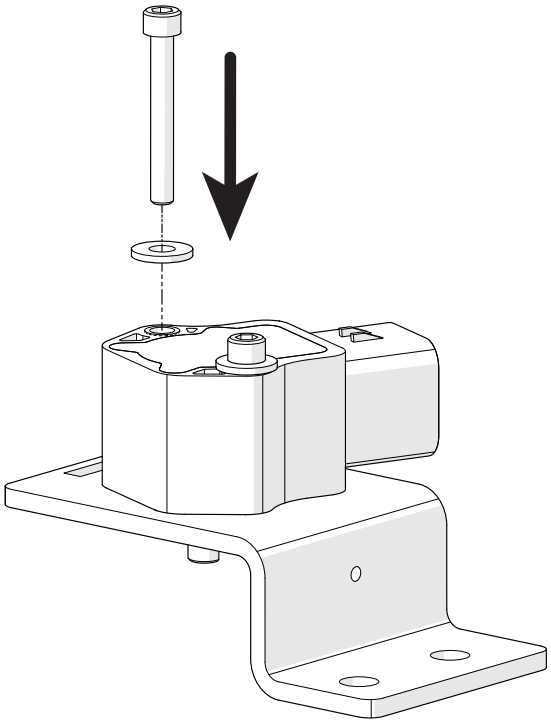

7. Set the cover in place. Apply blue threadlocker to the hardware removed earlier. Secure the cover.

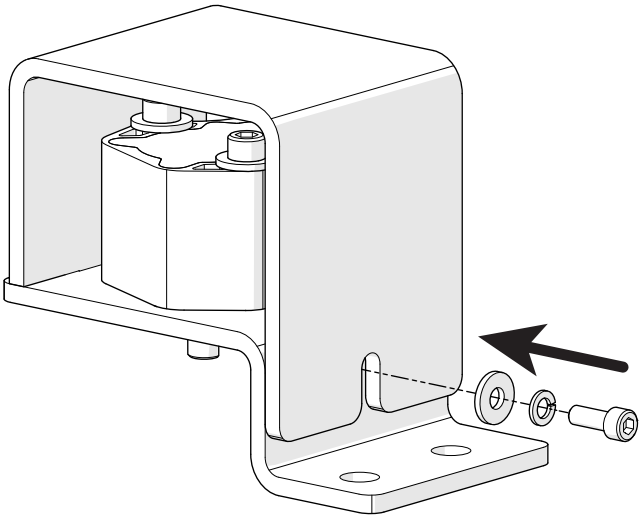

8. Set the sensor assembly in place on the base. Make sure sensor post goes through the cutout, and the flat face faces towards the connector (toward the inside of the MEWP).

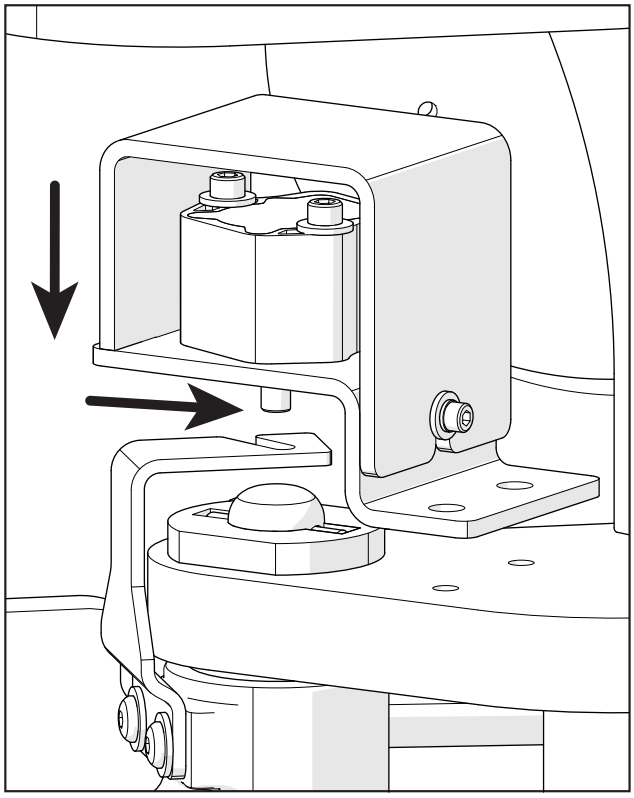

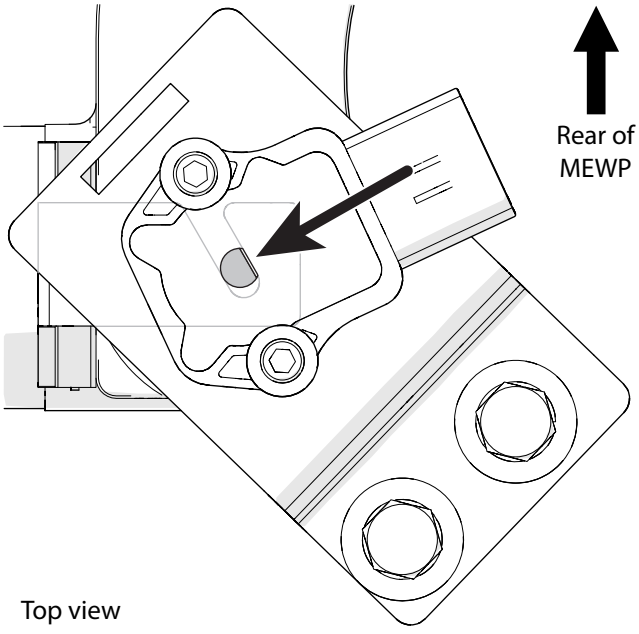

9. Secure the bracket to the base. Use the two sets of hardware removed earlier.

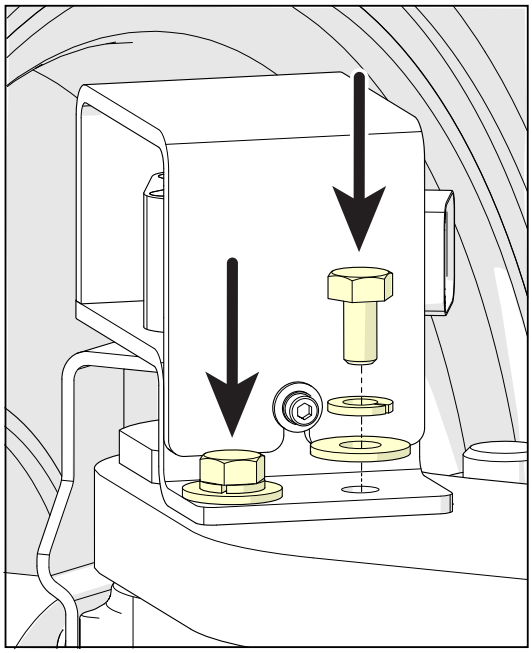

10. Connect the main harness to the steer sensor.

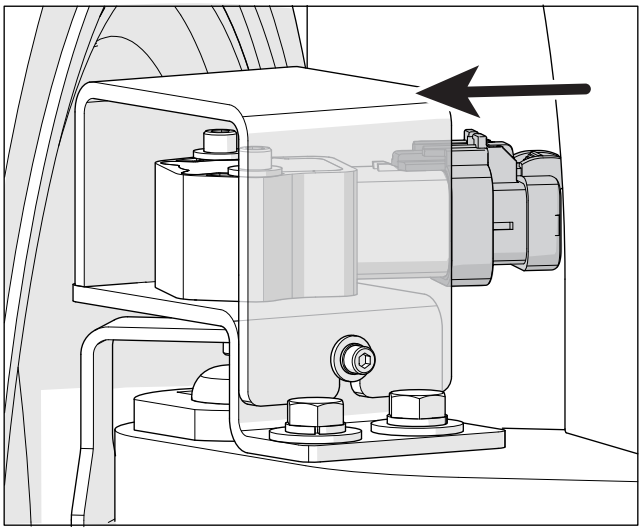

11. Calibrate the steer sensor. Refer to *5.8-24 Calibrate steer sensor menu on page 159*

5.4-5 Replace the rotary sensor

1. Unplug the rotary sensor from the harness.

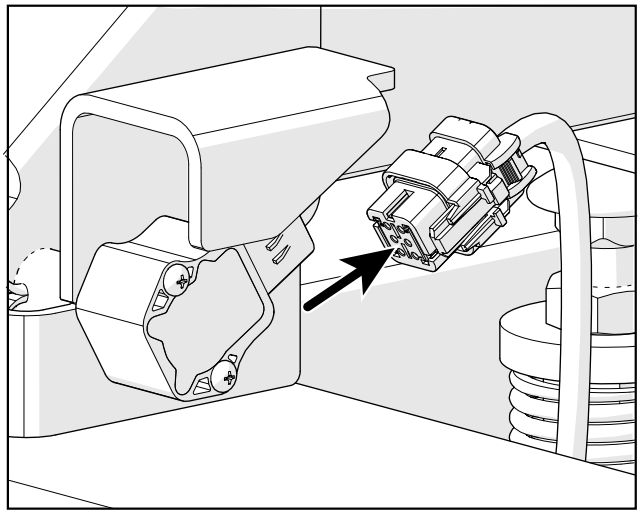

2. Remove the set screw on the back of the pin.

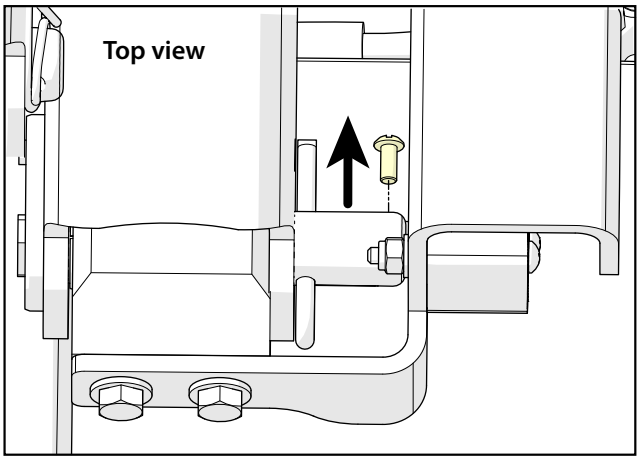

3. Remove the two sets of hardware securing the sensor bracket to the base block.

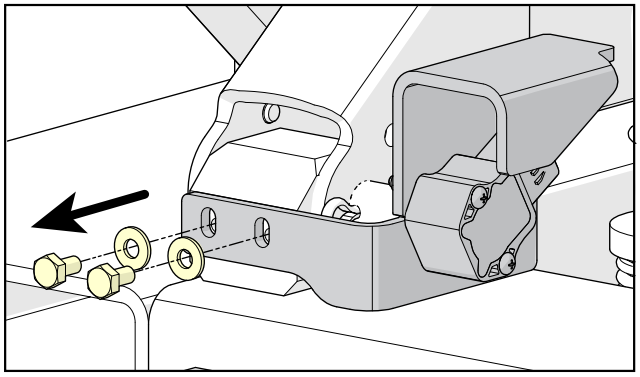

4. Slide the bracket straight out to the right until the sensor post is free of the pin. Lift the bracket and sensor away.

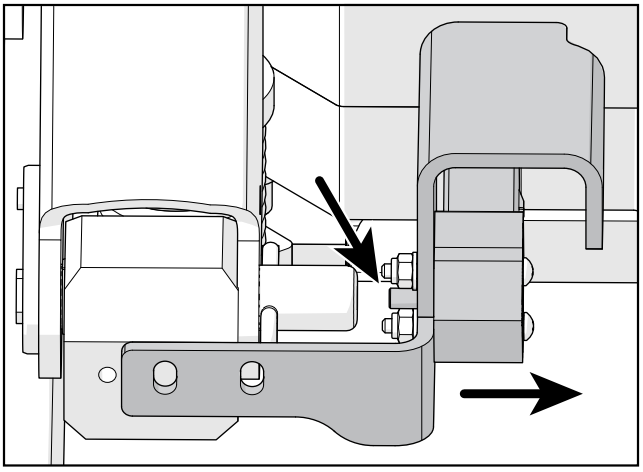

5. Remove the hardware securing the sensor to the bracket.

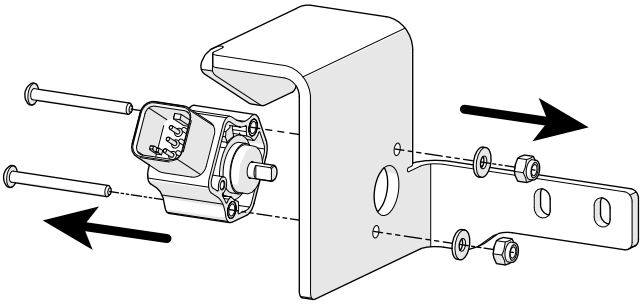

6. Take a new sensor and attach it to the bracket using the hardware removed previously. Make sure the flat face of the post faces away from the horizontal tab on the bracket.

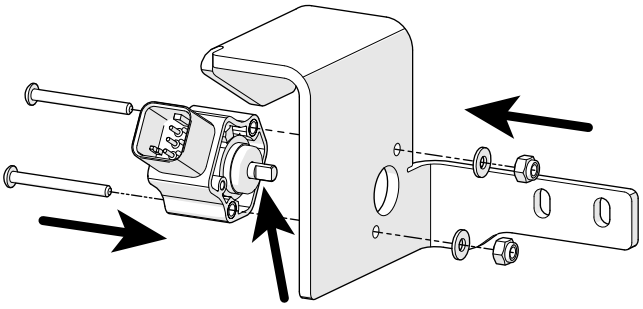

7. Slide the bracket and sensor into place on the base. Make sure the “D” shape of the sensor post lines up with the “D” shape hole in the pin.

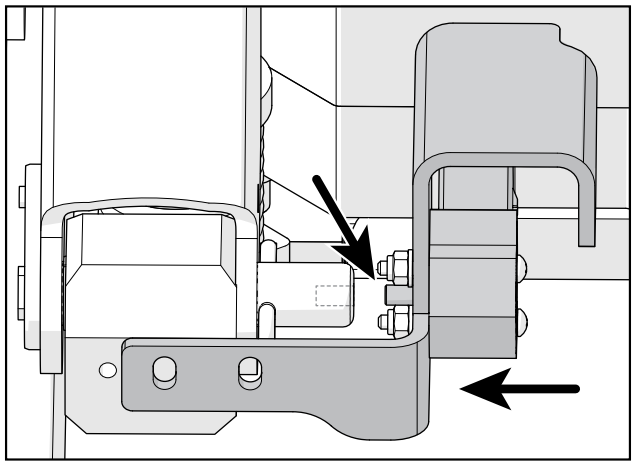

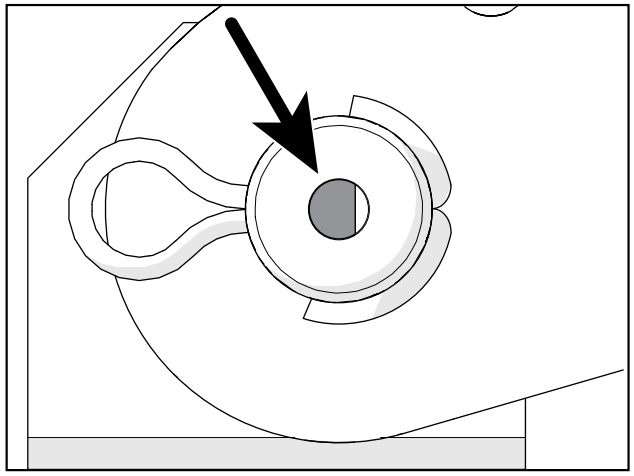

8. Secure the bracket against the base block with the hardware removed earlier.

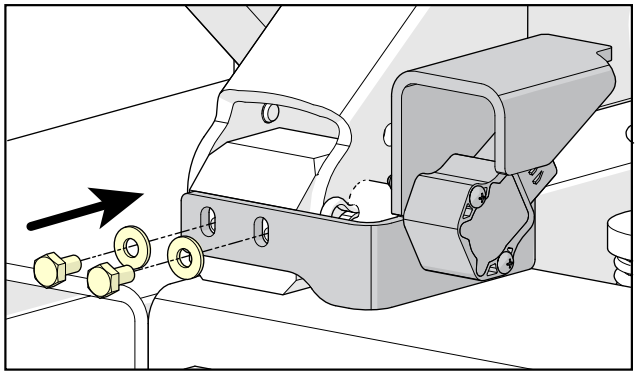

9. Apply blue threadlocker to the set screw.
10. Insert the set screw into the hole on the back of the pin and tighten it.

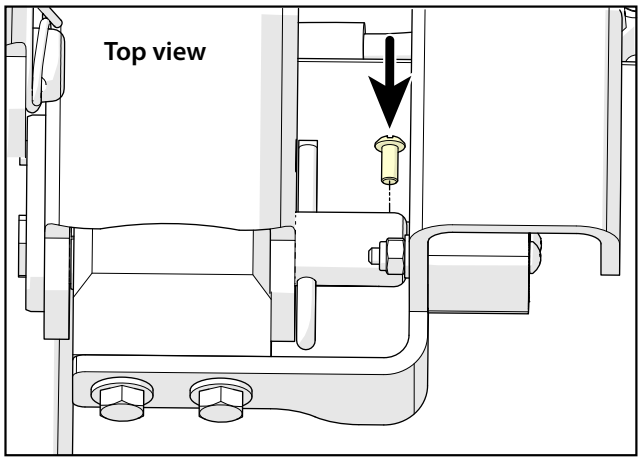

11. Connect the sensor to the harness.

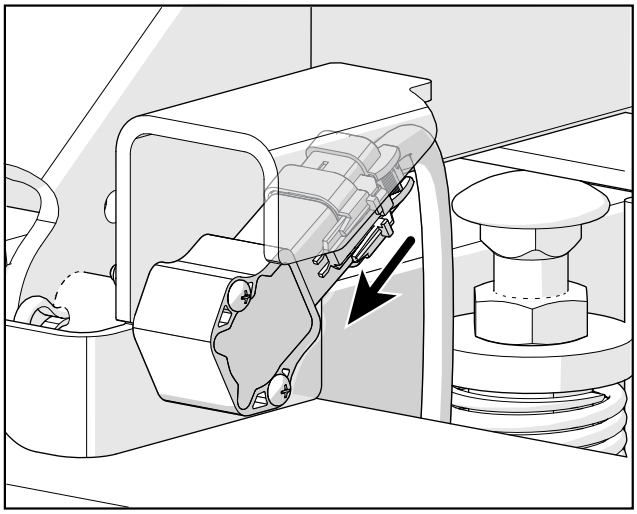

5.4-6 Set up a new external tilt switch

NOTE

To reprogram an existing tilt switch, go to 5.4-7 Reprogram an existing external tilt switch.

1. Park the MEWP on a firm level surface.
2. Disconnect the tilt switch from the 4 pin connector.

NOTE

Make sure the part number of the old tilt switch and new tilt switch are the same.

3. Remove the old tilt switch from the mount.
4. Install the new switch on the mount and connect the switch plug to the 4 pin connector.

NOTE

The tilt circuit is only powered when the controls are powered up.

5. Turn the main disconnect switch to the ON position.
6. Turn the base/off/platform key switch to the platform position.
7. Pull out the base emergency stop button.
8. Verify the switch is powered (red or green LED will be solid).

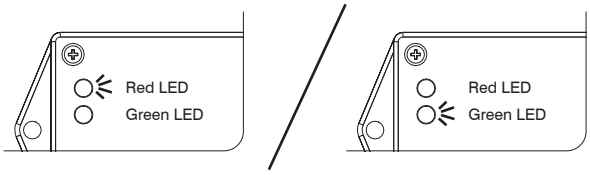

9. Program the tilt switch:
   - **a.** Press and release the set to zero button 3 times. Observe the LED flash codes as shown below.

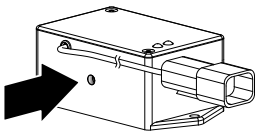

   - **b.** Only the red LED blinks for 4 seconds.

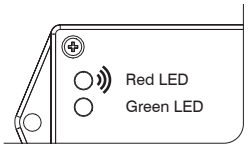

   - **c.** Both LEDs flash for 1 second. Results: The switch is learning the new zero position.

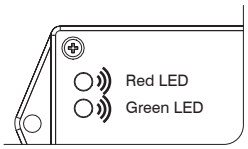

   - **d.** Both LEDs turn on solid for 1 second. Results: The new zero position has been learned.

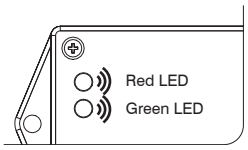

   - **e.** The green LED flashes and then the red LED turns on solid for 2 seconds. Results: The switch is verifying the new zero position.

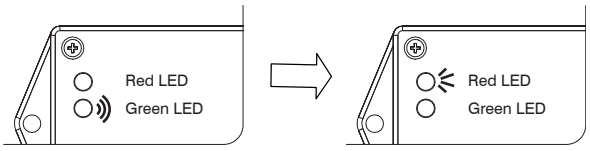

   - **f.** The green LED turns on solid. Results: The switch is ready for normal operation.

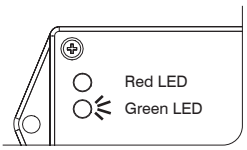

10. Push in the emergency stop button.
11. Turn the main power disconnect switch to the off position.

5.4-7 Reprogram an existing external tilt switch

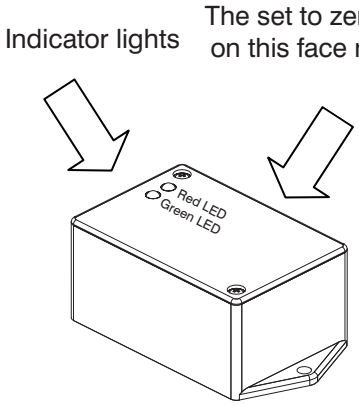

NOTE

The tilt circuit is only powered when the controls are powered up.

1. Turn the main disconnect switch to the ON position.
2. Turn the base/off/platform key switch to the platform position.
3. Pull out the base emergency stop button.
4. Verify the switch is powered (red or green LED will be solid).

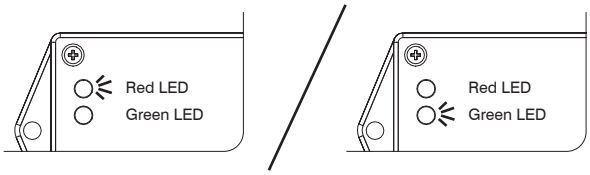

5. Reprogram the Tilt Switch

   a. Press and hold the set to zero button for 5 seconds.
   Results: Both LEDs turn OFF.

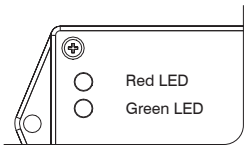

   b. Both LEDs flash.

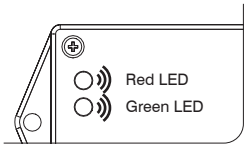

IMPORTANT

Step "c" must be completed within a 5 second period, or the switch will automatically exit program mode and return to normal operation using the previously stored data.

   c. Press and release the set to zero button 3 times.

   d. If the 5 second period has expired prior to completion, repeat steps "a", "b" and "c".

   e. Observe program delay / stabilization time (only the red LED blinks for 4 seconds).

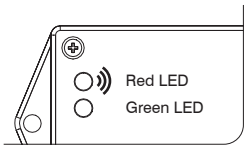

   f. Both LEDs flash for 1 second.
   Results: The switch is learning the new zero position.

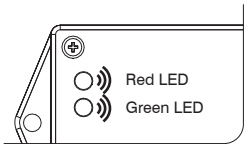

   g. Both LEDs turn on solid for 1 second.
   Results: The new zero position has been learned.

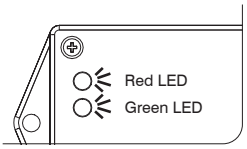

   h. The green LED flashes and then the red LED turns on solid for 2 seconds.
   Results: The switch is verifying the new zero position.

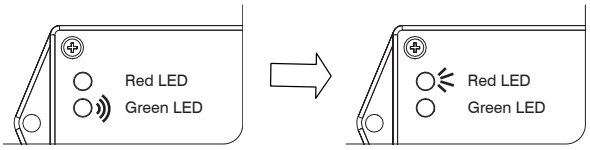

   i. The green LED turns on solid.
   Results: The switch is ready for normal operation.

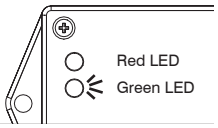

6. Push in the emergency stop button.
7. Turn the main power disconnect switch to the off position.
8. Refer to *5.4-8 External tilt switch operation*.

5.4-8 External tilt switch operation

The following describes the LEDs and what they indicate.

Light Indicators

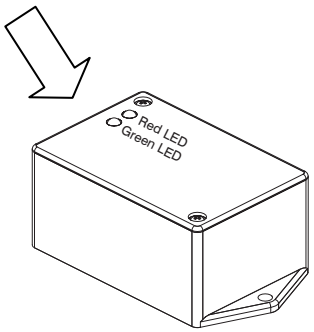

Green LED	**Illuminated whenever both tilt axes are within the specified degrees of the zero/ home learned position. Flashes when transitioning in or out of tilt angle limits, but built in time delay has not fully occurred.**
Red LED	**Illuminated whenever tilt on one or more axes is more than the specified degrees out from the zero/ home position.**
Green & Red LED	**On together, no blinking when fault detected.**

5.5 Wheels

Tools needed

- Adjustable torque wrench 203 Nm (150 ft-lb)
- 1-7/16” deep socket and wrench
- Hub puller

5.5-1 Remove the front wheel

1. Use an appropriately rated lifting device to raise the MEWP until the wheels are off the ground. Set the MEWP on stands which are adequately rated to support the weight of the machine.
2. Remove and set aside the dust cap.
3. Remove and discard the cotter pin.
4. Remove and set aside the flat washer and the castle nut.

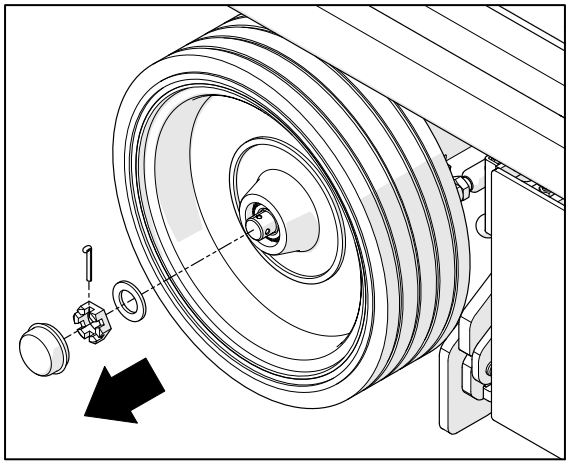

5. Remove the wheel from the spindle.

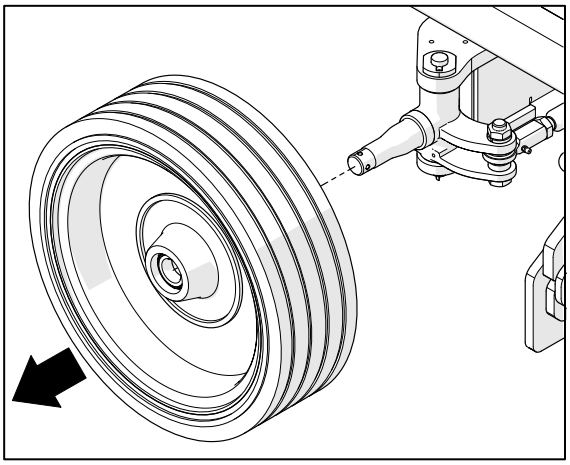

5.5-2 Install the front wheel

1. Remove the bearing caps from both sides of the wheel. Do not wipe off the excess grease.
2. With the cone-shaped side facing out, put the wheel on the spindle.
3. Install the flat washer and castle nut. Tighten the nut with your fingers.

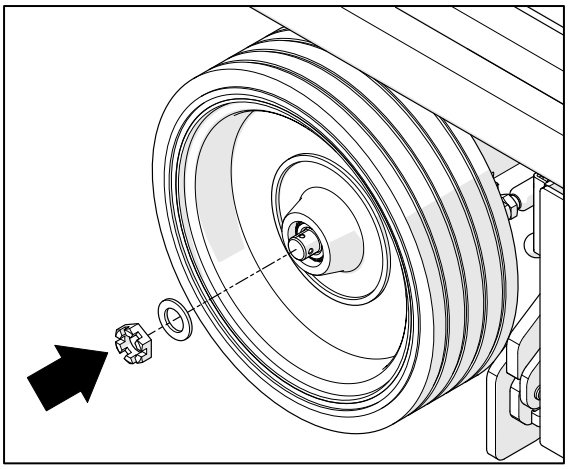

4. Rotate the wheel slowly while tightening the castle nut to approximately 68 Nm (50 ft-lb). This seats the bearings in the wheel.

IMPORTANT

Do not over-torque the castle nut as this could reduce the bearing life.

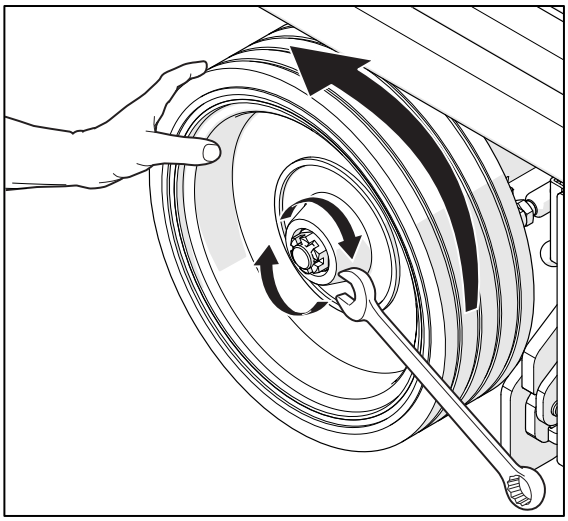

5. Use a socket wrench to loosen the castle nut to remove the torque. Do not let the wheel rotate when you loosen the nut.
6. Tighten the castle nut by hand. Make sure the wheel rotates freely.

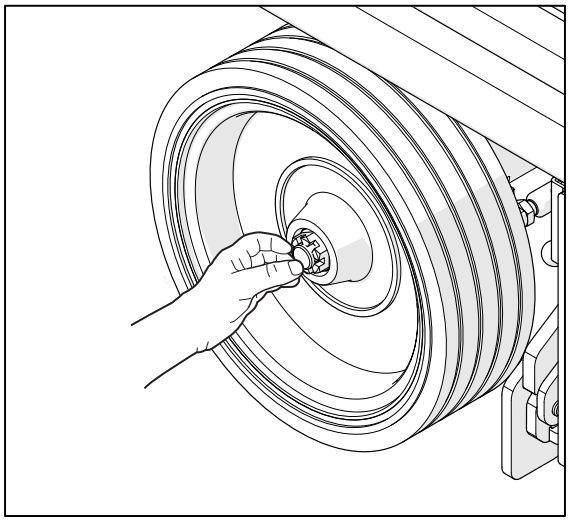

7. Check if the hole in the spindle and a slot in the castle nut are aligned. If they are not, loosen the nut by hand until they are aligned.

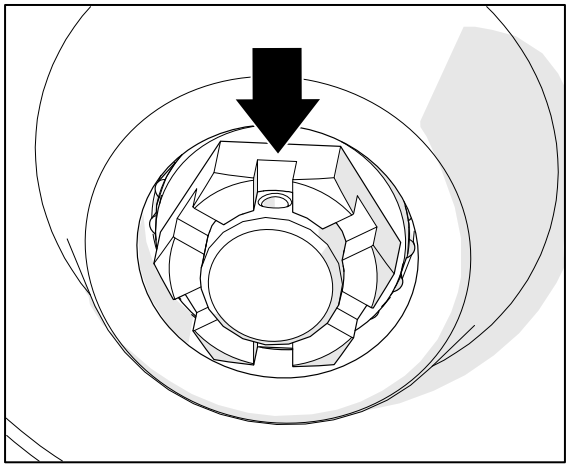

8. Insert a 3/16” x 1-1/2” cotter pin through the holes in the spindle, with the long arm of the cotter pin on the outside. Push the cotter pin in all the way.
9. Tap the top of the cotter pin with a hammer until it sits level with the castle nut.

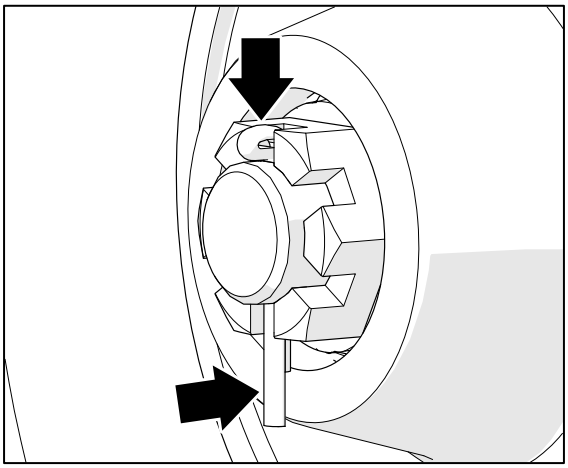

10. Bend the long end of the cotter pin over the end of the spindle to secure the castle nut.
11. Tap the short end of the cotter pin back between the castle nut and the hub.

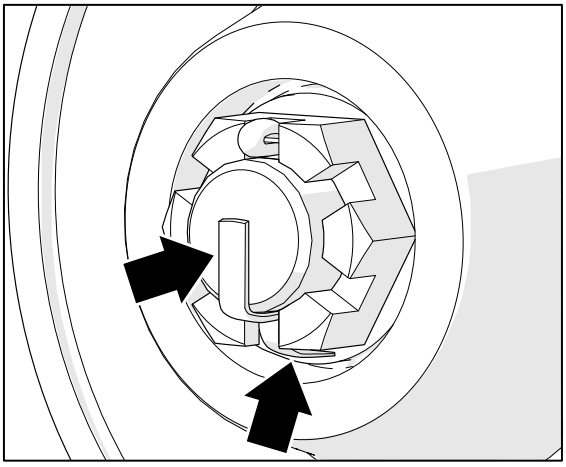

12. Install the dust cap over the castle nut. Be sure not to damage the dust cap while installing it.

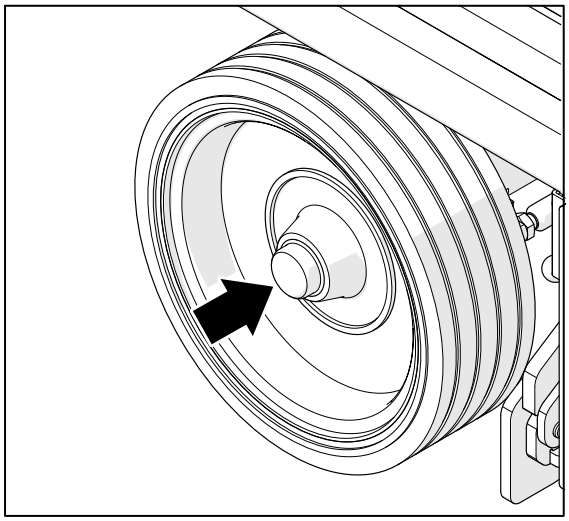

5.5-3 Remove the rear wheel

1. Use an appropriately rated lifting device to raise the MEWP until the wheels are off the ground. Set the MEWP on stands which are adequately rated to support the weight of the machine.

2. Remove and discard the cotter pin.

3. Remove and set aside the castle nut.

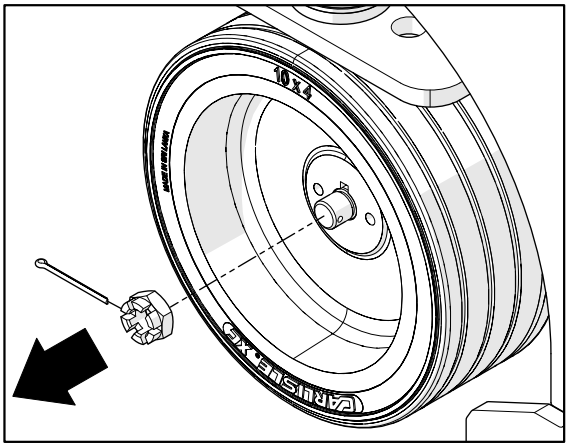

4. Use two long 3/8”-24 bolts with a hub puller to remove the wheel from the wheel motor.

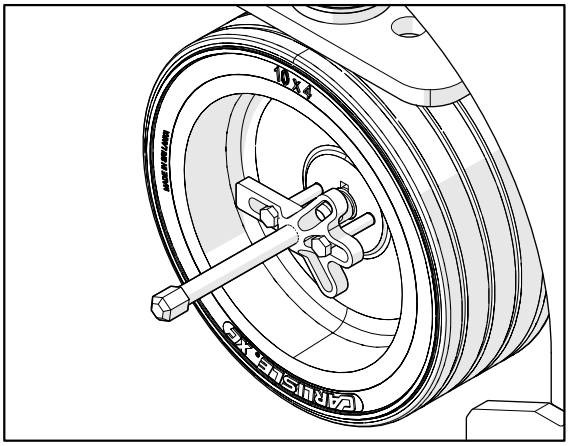

5.5-4 Install the rear wheel

1. Make sure the key is in the spindle.
2. Line up the keyway in the wheel with the key in the spindle. Put the wheel on the spindle.

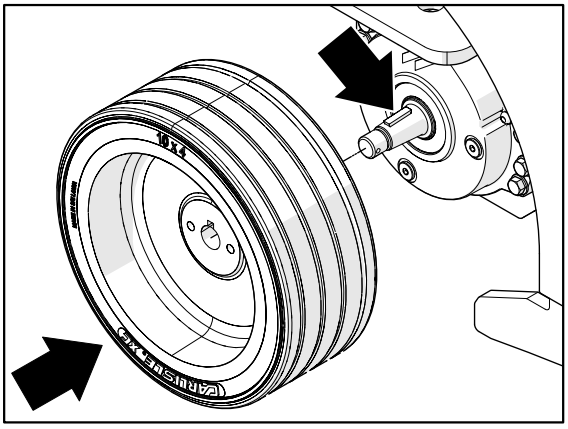

3. Install the castle nut. Tighten the nut with your fingers.
4. Torque the castle nut to 203 Nm (150 ft-lb).

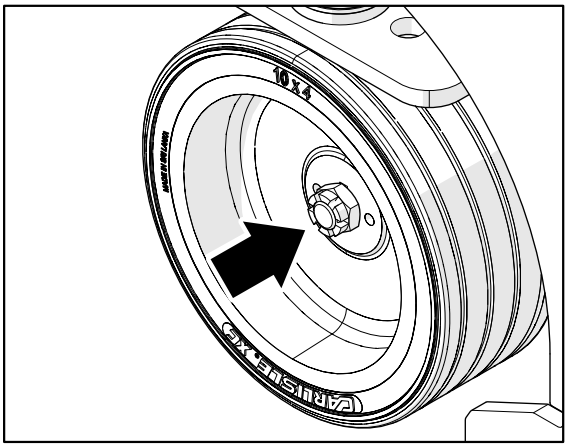

5. Check if the holes in the spindle and the slots in the castle nut are aligned. If they are not, continue to torque the nut until they are aligned.

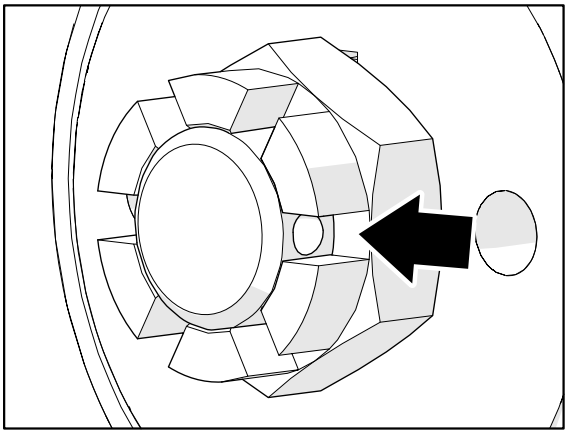

6. Insert a 1/8" x 2" cotter pin through the holes in the spindle, with the long arm of the cotter pin on the outside. Push the cotter pin in all the way.
7. Bend the long end of the cotter pin over the end of the spindle to secure the castle nut.

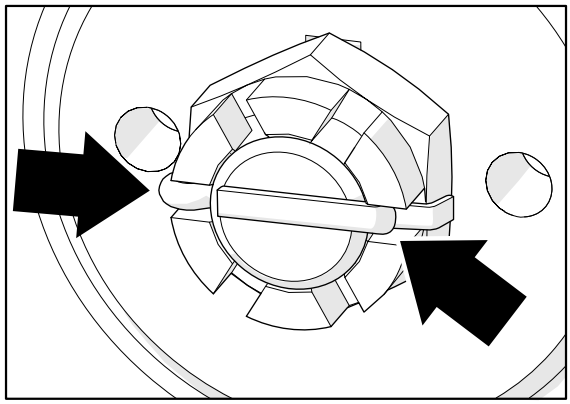

8. To limit rust bleed, apply a few drops of grease in the two small tapped holes in the wheel.

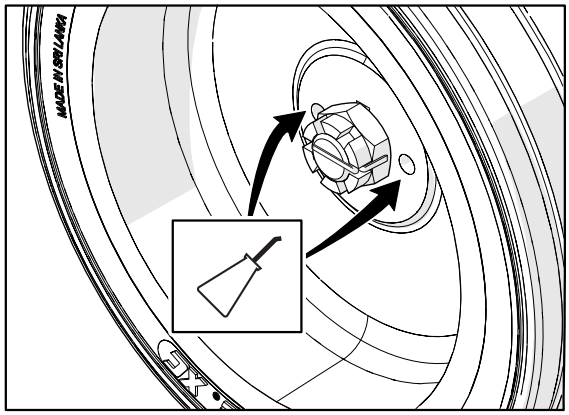

5.5-5 Do a test of the wheel motor

1. With the power off test between:
   - U and B -
   - V and B -
   - W and B -
2. All should read approximately 9.05 K ohms, and should all be equal. This is the most important part.
3. If any read short to B -, remove all three cables (U, V, and W) and test on the motor controller between:
   - U and B -
   - V and B -
   - W and B -
4. These should read between 20 K and 35 K ohms approximately, but should all be equal.
5. If you still read a short to B-, replace the controller.
6. If they all now read correctly, replace the motor.

NOTE

When testing on the motor you should see an open circuit between U and the motor body, V and the motor body, and W and the motor body

When testing between any of the 3 terminals on the motor (U, V, W) you should see a closed circuit

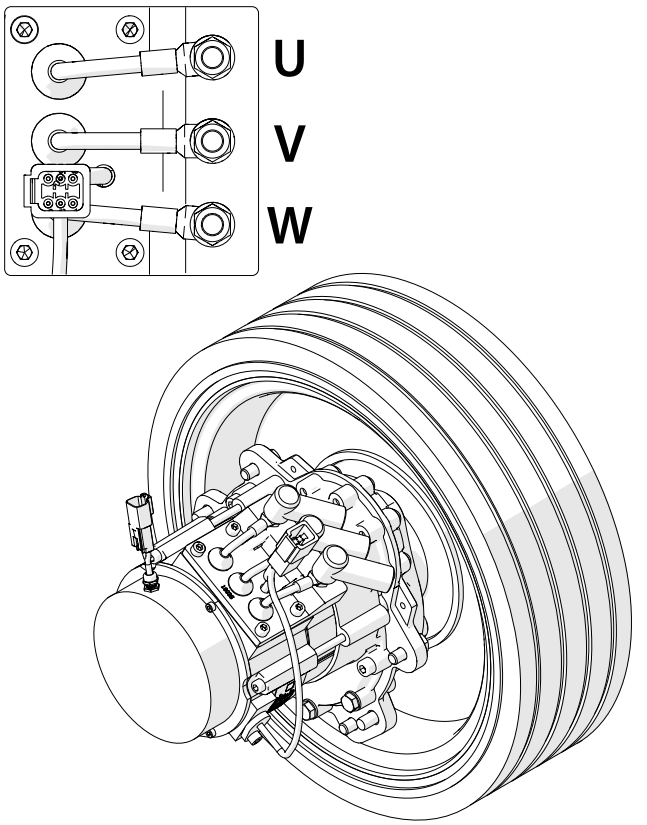

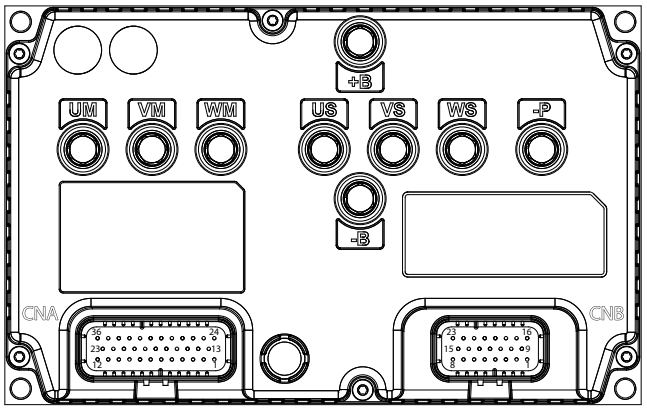

Connector A **Connector B**

5.5-6 Do a test of the wheel motor temperature sensor

1. Test between pins 3 and 4 of the connector. It should read 1000 ohms (1k).

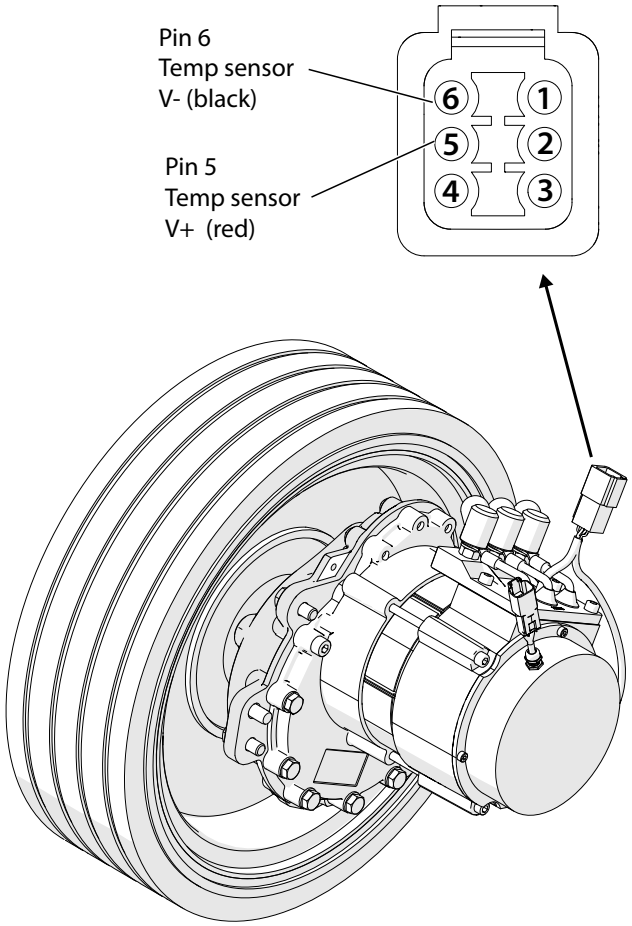

5.6 Batteries

5.6-1 Battery servicing

⚠ WARNING

Explosion hazard. Keep flames and sparks away. Do not smoke near the batteries. Battery acid releases explosive gas while charging. Charge the batteries in a well-ventilated area.

⚠ WARNING

Battery acid is extremely corrosive – wear proper eye and facial protection as well as appropriate protective clothing. If contact occurs, immediately flush with cold water and seek medical attention.

1. Turn the main power disconnect switch to the off position.
2. Check the battery case for damage.
3. Check the battery fluid level in each battery. If the plates are not covered by at least 13 mm (1/2") of solution, add distilled or demineralized water.
4. Make sure all the battery connections are tight.

NOTE

Do not use any batteries other than the flooded lead-acid batteries of the proper Ah rating.

⚠ WARNING

Use the original or equivalent to the original parts and components for the MEWP.

5.7 Battery Charger

5.7-1 Charger operation

1. Park the MEWP near a power outlet.
2. Turn the main power disconnect switch to the OFF position.
3. Plug in the battery charger.
4. When charging is complete, unplug the charger before you turn the main power disconnect switch to the ON position.

IMPORTANT

Make sure the main power disconnect switch is in the OFF position when the battery charger is connected to power.

5.7-2 Charger maintenance

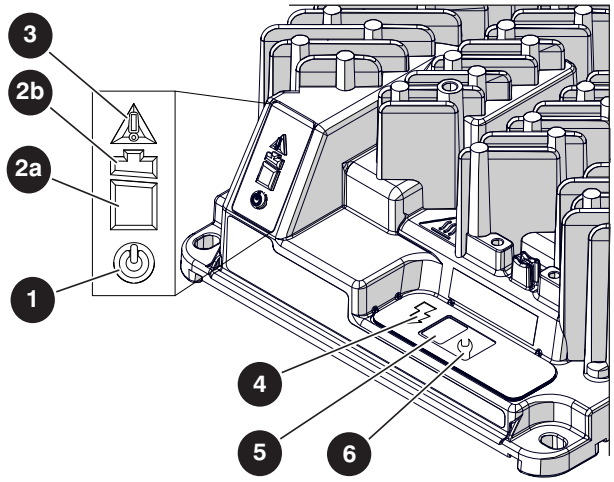

No.	Indicator type	Condition	Description
1	*AC power*	Blue	Battery charger is connected to the AC power.
2a	*Battery charge <80%*	Green flash	Low charge — continue to charge.
		Solid green	High charge — continue to charge.
2b	*Battery charge >80%*	Green flash	High charge — continue to charge or stop the charge.
		Solid green	Charge complete — stop the charge.
3	*Fault/ error*	*Solid red*	*Charger fault* — refer to the service manual.
		Amber flash	*Error found* — refer to the service manual.
4	*Charge output*	*Solid yellow*	*Charger output is on.*
5	*Charge profile/ error display*	*Algorithm or fault/ error code*	*N/A.*
6	*Select charge profile*	*Charge algorithm*	*N/A.*

5.7-3 Charger profiles

IMPORTANT

Charger profiles differ depending on the battery type and manufacturer. Only use charger profiles with the batteries they were designed for. The use of other incompatible batteries may cause poor charging performance and decreased battery health.

1. Place the charger near a power outlet, but leave it unplugged.
2. Find your battery type in the following chart, and make a note of the profile number (starting with P).
3. Press and hold the Select Charger Profile button (wrench icon) on the Delta-Q charger. You will hear a small click when you press the button.
4. Continue to hold the Select Charger Profile button, and connect the charger to a power outlet.
5. Continue to hold the button for approximately 10 seconds or until the Error Indicator turns orange and the Battery Charging Indicator starts flashing green.
6. The current charger profile displays up to three times.

NOTE

The process times out and the profile remains unchanged if there are 15 seconds of inactivity, or if the charging profile is allowed to display three times.

7. Press and release the button to scroll through the charging profiles.
8. Select a profile, and press and hold the button for 10 seconds or until the Error Indicator and Battery Charging Indicator lights turn off.
9. Press the button again to confirm the selected profile.
10. Disconnect the charger from the power outlet.

Battery Brand	Compatible with	Profiles
U.S. Battery - US 2200 XC/XC2 Flooded, 6V, 232 Ah	200 - 255 Ah flooded	#11 (P-0-1-1)
Discover Energy - EVGC6A-A AGM, 6V, 220 Ah	220 - 400 Ah AGM	#43 (P-0-4-3)
Discover Energy - EV12A-A AGM, 12V, 140 Ah*		
U.S. Battery - US 12V XC2 Flooded, 12V, 155 Ah*	330 - 425 Ah flooded	#73 (P-0-7-3)
U.S. Battery - US 250 XC/XC2 Flooded-lead, 6V, 255 Ah		
Trojan - T105 ELPT Flooded, 6V, 225 Ah	150 - 250 Ah flooded	#3 (P-0-0-3)
Trojan - T1275 ELPT Flooded, 6V, 150 Ah*	120 - 166 Ah flooded	
Tianneng - TNCE3240-W AGM, 6V, 260 Ah	220 - 260 Ah AGM	(P-0-1-2)
Tianneng - 6-EVF-127 Flooded, 12V, 148 Ah*	127 - 148 Ah AGM	

*The batteries used for these charger profiles are connected in a series-parallel circuit.

5.7-4 Charger connector

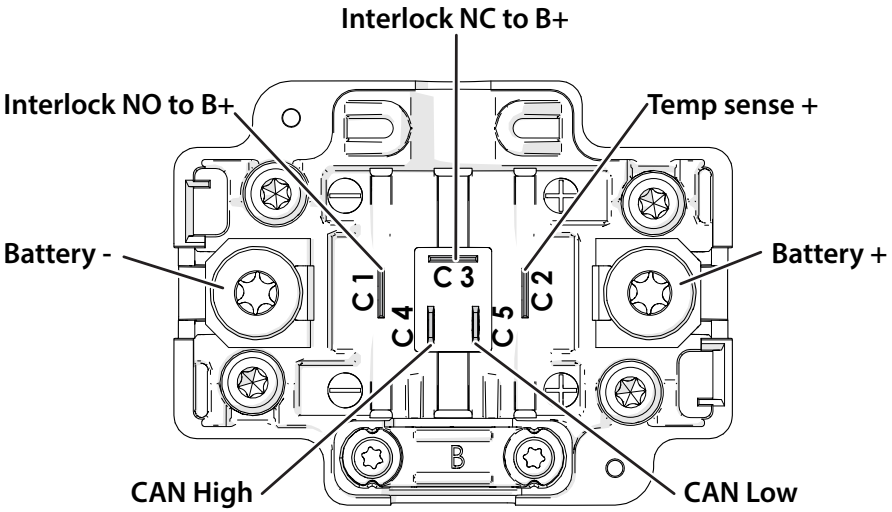

5.7-5 Charger troubleshooting

The IC Series charger is continuously monitoring itself and its environment for unusual conditions. There are a few indications that may require the attention of the user.

Symptom	Recommended Action
No Indicator Lights	Check AC voltage and connection to wall power.
Only Blue AC Light On	Charger is connected to AC and is waiting for a battery to be connected, or for CAN remote control commands. Battery voltage must rise over 0.1V/cell before charging will begin. Some charging algorithms require a higher battery voltage to begin.
Solid Red Fault/Error Indicator	Read fault code (e.g., F-0-0-1) number on the Charge Algorithm/Error Display and refer to the fault code table.
Flashing Amber Fault/Error Indicator	Read error code (e.g., E-0-0-1) number on the Charge Algorithm/Error Display and refer to the error code table.

If and its environment for unusual conditions. There are a few indications that may require the attention of the user.

5.7-6 Charger fault codes

Fault Code	Description	Troubleshooting/Customer Actions
F-0-0-1	DC-DC Failure: LLC excessive leakage fault.	Internal charger fault. Disconnect AC and battery from charger for a minimum of 30 seconds. If it fails again, contact Skyjack service.
F-0-0-2	Power Factor Correction (PFC) Failure: PFC excessive leakage fault.	
F-0-0-3	PFC has taken too long to boost.	
F-0-0-4	The charger has been unable to calibrate the current offset.	
F-0-0-5	The voltage drop across the DC relay is too high while the relay is closed.	
F-0-0-6	Large difference between internal DC-DC and battery sense currents.	

5.7-7 Charger error codes

Fault Code	Description	Troubleshooting/Customer Actions
E-0-0-1	Battery voltage over limit in software. Typically 2.5V/cell. At the start of a charger cycle only and only for lead acid batteries. It is acceptable for the voltage to go above this during charging and when charging Lithium batteries.	■ Check the battery voltage and cable connections. ■ Check charger voltage model is appropriate for batteries. ■ This error automatically clears once the condition has been corrected.
E-0-0-2	Battery voltage too low to start a charge cycle. Algorithm dependent. Typically 0.1V/cell.	■ Check the battery voltage and cable connections. ■ Check the charger is the correct voltage for the batteries it is connected to. ■ Check battery size and condition. Batteries may be overdischarged. Use another charger to bring the batteries above the minimum voltage. ■ This error automatically clears once the condition has been corrected.
E-0-0-3	Charge time limit reached. Algorithm dependent.	■ Charger output reduced due to high temperatures. Operate at lower ambient temperature. ■ Charger output reduced due to low AC voltages. Check AC voltages. ■ Check for shorted or damaged cells. ■ Poor battery health. Replace the battery. ■ Batteries too large for the charger. Replace batteries. ■ Very deeply discharged battery. Retry charge. ■ Battery connections are loose or corroded. Check connections. ■ Extra loads. Turn off other devices running on the battery ■ This error automatically clears once the charger is reset by cycling DC or by loss of AC for over 10 minutes.
E-0-0-4	Battery could not be trickle charged up to the minimum voltage. May also be used for other battery-related errors depending on the algorithm.	■ Check for shorted or damaged cells. ■ Poor battery health. Replace the battery. ■ Check DC connections. ■ May be caused because of output reduced due to high temperature. ■ Some new batteries may trigger these alarms as there voltage dips ■ When charging starts before it goes onto rise.
E-0-0-7	Charge amp-hour Limit reached. Algorithm dependent.	■ Charger output reduced due to high temperatures. Operate at lower ambient temperature ■ Charger output reduced due to low AC voltages. Check AC voltage. ■ Check for shorted or damaged cells. ■ Poor battery health. Replace the battery. ■ Very deeply discharged battery. Retry charge. ■ Battery connections are loose or corroded. Check connections. ■ Extra loads. Turn off other devices running on the battery ■ This error automatically clears once the charger is reset by cycling ■ DC or by loss of AC for over 10 minutes.

E-0-0-8	Battery temperature out of range. Algorithm dependent.	■ Cool or warm batteries as needed. ■ Check temperature sensor and connections. ■ This error automatically clears once the condition has been corrected.
E-0-1-1	Charge disabled by external command	■ Charger has been disabled by an external controller over the CANbus network. ■ This error automatically clears once the command has been removed.
E-0-1-2	Reverse polarity	■ Battery is connected the wrong way around. Check the battery connections. ■ This error automatically clears once the condition has been corrected.
E-0-1-3	Battery does not take current	■ Check for an electrical component or loose connection between the charger and the battery. ■ When charging lithium batteries, make sure the charger is properly connected to the battery and battery management system. ■ This error automatically clears once the charger is disconnecting DC or AC.
E-0-1-9	Hardware build does not support software version	■ The charger hardware does not support the new software version. ■ Existing SW is left running. Contact Delta-Q Technologies.
E-0-2-0	No active algorithm selected	■ Reprogram the charger with its original software, algorithms, and settings. ■ Use the wrench button to select the correct algorithm if still available on the charger. ■ The problem clears automatically when an available algorithm is set on the charger, as default.

E-0-2-1	High battery voltage while charging. Algorithm dependent. Typically 2.8V/cell.	■ When already charged, some new batteries may exhibit this error. ■ Disconnect the battery connection and wait for the battery voltage to fall. Reconnect the batteries to see if the condition reoccurs. ■ Check battery size and condition. Batteries in poor condition, with a high internal resistance, may cause this error. New batteries, if charged when already full, may also cause this error. Disconnect and reconnect the batteries a few times. ■ Check the battery voltage and cable connections. ■ This error automatically clears once the condition has been corrected.
E-0-2-2	Low battery voltage while charging. Algorithm dependent. Typically 0.1V/cell.	■ Another device may be drawing current from the battery. ■ Check the battery voltage and cable connections. ■ Check battery size and condition. Batteries may be overdischarged. ■ Use another charger to bring the batteries above the minimum voltage. ■ This error automatically clears once the condition has been corrected.
E-0-2-3	High AC voltage error (>270 VAC)	■ AC voltage is too high. Connect charger to an AC source that has a stable AC voltage between 85 and 270 VAC/45-65 Hz. ■ In newer software versions this does not prevent charging. ■ This error will automatically clear once the condition has been corrected.
E-0-2-4	Charger failed to turn on properly	■ Disconnect AC input and battery for 30 seconds. If the error persists, contact Delta-Q Technologies.
E-0-2-5	AC voltage has dipped below 80 VAC 3 times in 30 seconds	■ AC source is unstable. This could be caused by an undersized generator and/or input cables that are too long or too small. ■ Connect the charger to an AC source with a stable AC voltage between 85 and 270 VAC/45-65 Hz. ■ This error will automatically clear once the condition has been corrected.
E-0-2-8	Attempt to select algorithm incompatible with this software	■ Update charger software, continue to use existing algorithm* or select a different charging algorithm that is compatible. *** Notes** ■ If selecting a different algorithm, the existing algorithm will remain in the charger. ■ If upgrading an existing algorithm, the existing algorithm will be deleted. Contact Delta-Q Technologies for a software upgrade to run the new algorithm.
E-0-2-9	Cannot transmit on CAN bus	■ Check the physical CAN connector, electrical bus conditions, and other CAN modules for correct functioning. For example, check that termination resistance is approximately 60 ohms.

E-0-3-0	CAN heartbeat timeout on Battery module	▪ May be caused by a missing heartbeat message. Check the CAN bus battery module for correct function. ▪ This error automatically clears once the condition has been corrected.
E-0-3-1	The Vref for the ADC measurements has triggered an alarm	▪ Internal charger error. Disconnect AC and the battery for a minimum of 30 seconds and retry. ▪ If the problem persists, contact Delta-Q Technologies. ▪ This error automatically clears once the condition has been corrected.
E-0-3-2	CAN Heartbeat Lost	▪ An error was detected with the CAN heartbeat communications with a registered node being guarded. ▪ Check the networked CANbus device(s) for correct functioning. ▪ This alarm does not display or get logged on the charger but does appear on the CAN bus via an emergency message.
E-0-3-6	Battery temperature sensor is missing or shorted	▪ Check sensor connections. ▪ The charger behavior when this fault occurs can be configured. OEMs may contact Delta-Q Technologies for more information. ▪ This error automatically clears once the condition has been corrected.
E-0-3-8	Fan will not turn	(Fan-equipped models only) ▪ Check fan connections. ▪ Check to make sure the fan turns freely and is not obstructed. ▪ This error automatically clears once the condition has been corrected.
E-0-3-9	The button is stuck down	▪ Inspect for damage or objects on or near the button.
E-0-4-0	Fan voltage pulled low	(Fan-equipped models only) ▪ Check to make sure the fan turns freely.
E-0-4-5	Battery disconnected	▪ Battery disconnected ▪ Reconnect the battery or check the wiring
E-0-4-6	Invalid PDO Length	▪ Check to make sure all PDOs are valid length. ▪ This error automatically clears once the condition has been corrected
E-0-4-7	Platform overvoltage alarm	▪ A battery or some other source has been connected to the charger that exceeds the hardware's design limits.

5.8 Skycoded control module

5.8-1 Calibration and diagnostic tool key functions

⚠ WARNING

Only trained and authorized personnel are permitted to service a MEWP.

⚠ WARNING

Read all instructions closely before attempting each phase of the calibration procedure.

The Skycoded display module is located on the side of the hydraulic/electric tray. The default display view shows the battery charge and hour meter.

Use the Skycoded display module to calibrate, diagnose issues, and adjust or set options and parameters.

5.8-2 Skycoded display controls



Button	Function
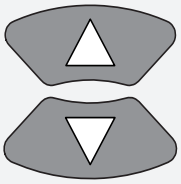	**UP and DOWN buttons** Select or scroll through menus.
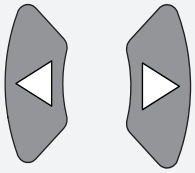	**LEFT and RIGHT buttons** Change settings and move through menus.
	**ENTER button** Select or save.

5.8-3 Main menu overview

MACHINE INFO	View the software versions and the current state of the machine.
TESTER MENU	View the main controller machine parameters.
TESTER SEC	View the secondary controller machine parameters.
PARAMETER	Adjust the machine parameters and set options.
MACHINE SETUP	Set the model, region, battery type, override mode, and access the calibration menu.
LOGGED ALARMS M	View the logbook of alarms for the main controller.
LOGGED ALARMS S	View the logbook of alarms for the secondary controller.
STORE DATA	Save changes.

5.8-4 Main menu and language selection menu

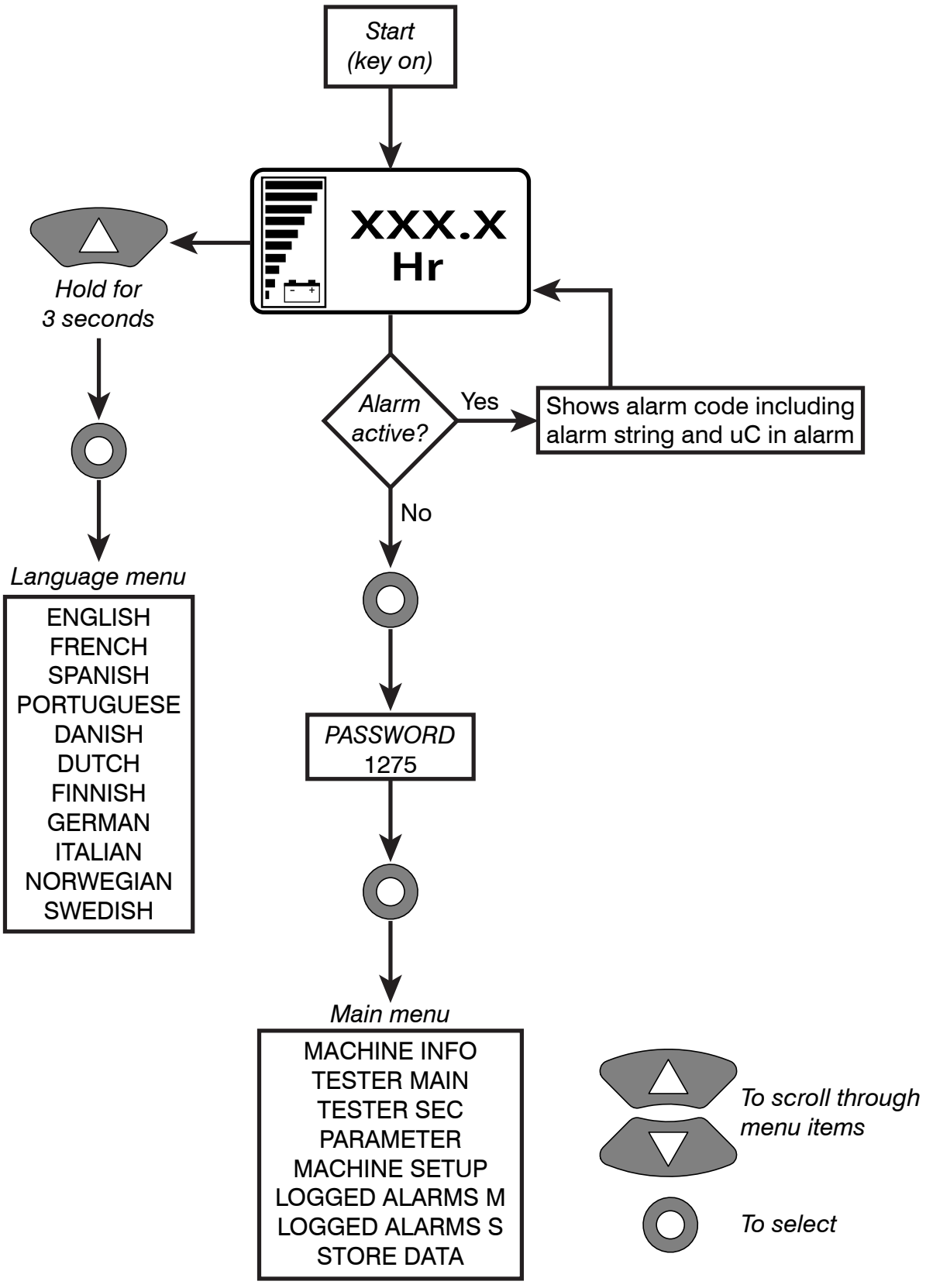

5.8-5 Machine info menu

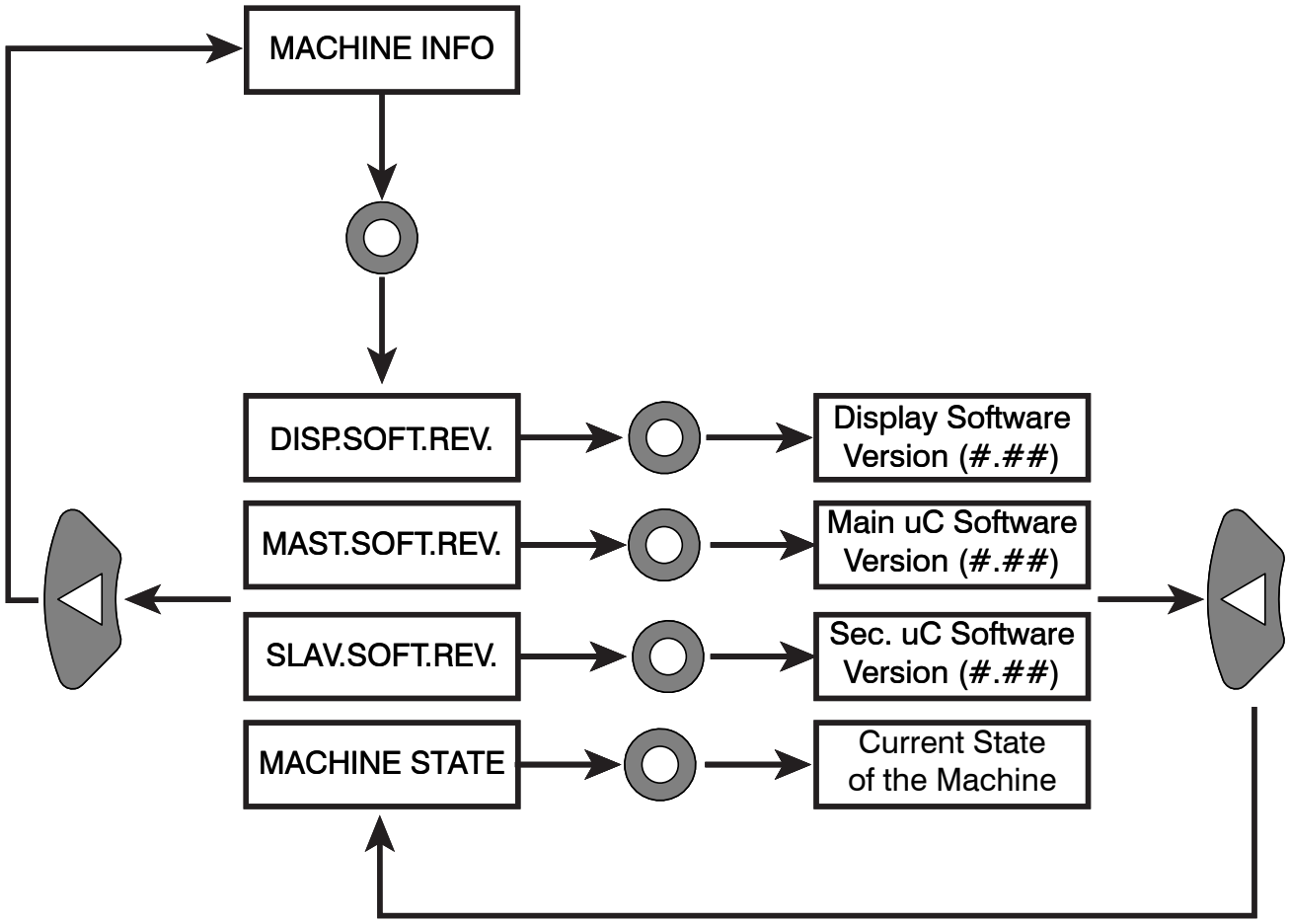

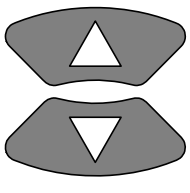

To scroll through menu items



To select

5.8-6 Tester main menu

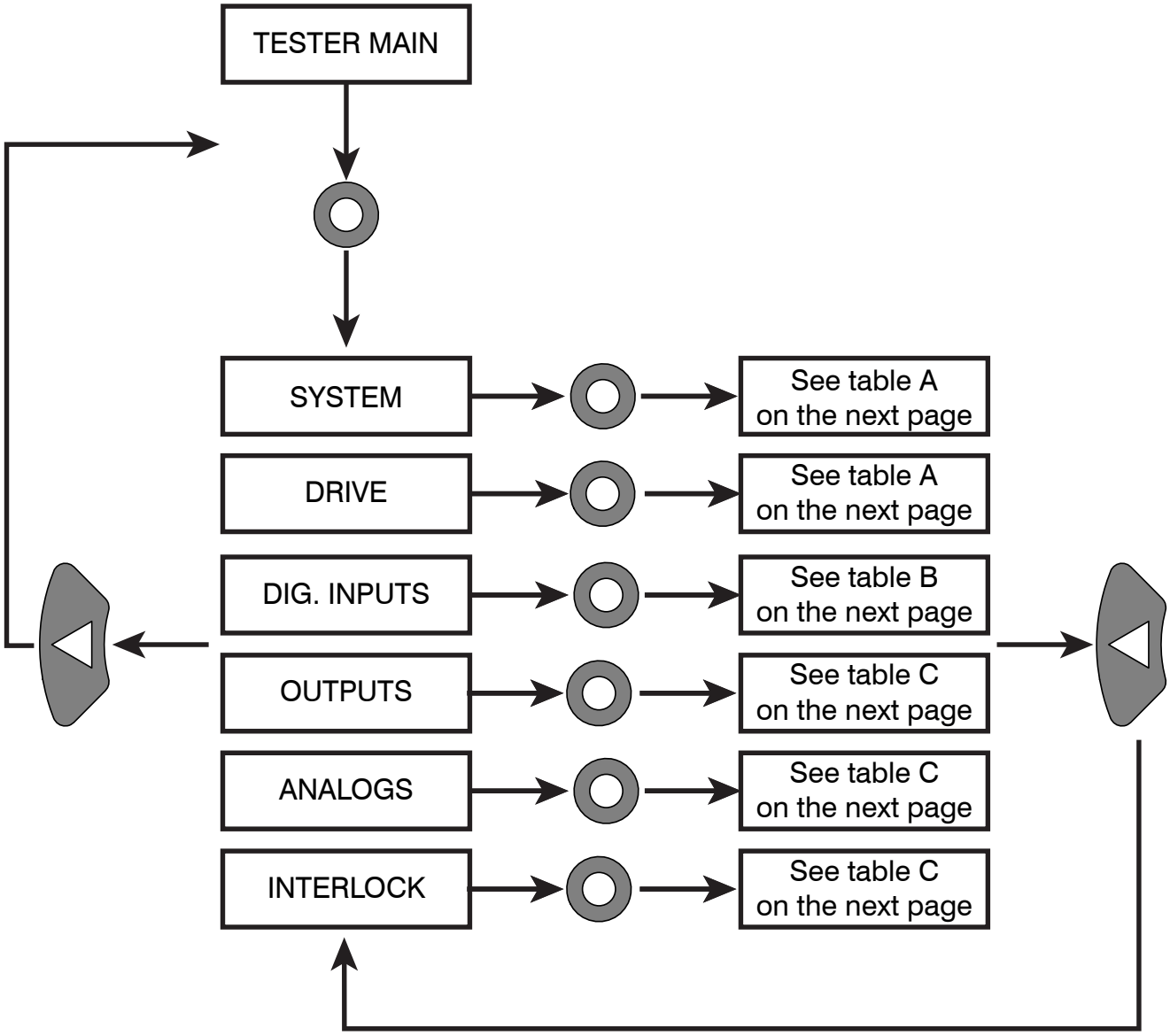

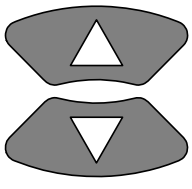

To scroll through menu items



To select

5.8-7 Tester main menu table A

SYSTEM	
KEY VOLTAGE (V)	Key voltage pin A3 measured in real time
BATTERY VOLTAGE (V)	Voltage from 03B contactor to B+ on controller
DC BUS CURRENT (amps)	Estimation of the battery current based on the working point.
BATTERY CHARGE (%)	Estimation of the battery charge based on the battery voltage
PLT HEIGHT (%)	Estimation of platform height, calculated from the angle transducer.
LIFT PRESS PSI	Estimation of lift pressure (psi)
LOAD EST (%)	Estimation of the platform load, calculated from the pressure transducers.
ELEVATED	Indicated if the machine is in the elevated state. 0=Stowed. 1=Elevated

DRIVE	
MOTOR VOLTAGE (%)	Estimated motor voltage.
TARGET SPD (Hz)	Targeted driving speed command in Hz.
MEAS. SPD MAIN (Hz)	Motor speed measured through the encoder (Hz) Right motor
MEAS. SPEED SEC (Hz)	Motor speed measured through the encoder (Hz) Left motor
DRV AMP MAIN	DC current occurrence on the right motor
DRV AMP SEC	DC current occurrence on the left motor
STEER ANGLE	Angle of steer wheels in degrees. 0 degrees with wheels straight. N/A for models SJ3215 micro, SJ3219 micro, SJ3215 E, and SJ3219 E.
CONTROLLER TEMP (C)	Internal temperature of the controller.
MOTOR TEMP (C)	Internal temperature of the right motor.

2237AR-1

5.8-8 Tester main menu table B

DIG. INPUTS	
DI16_B13	Input from S17 Indoor switch (ON in indoor position)
DI1_A6	Not used
DI2_A7	Input from Platform E-Stop S4 for Platform signal
DI7_B2	Input from S2 Lift/Lower switch for RAISE signal
DI11_B6	Input from S2 Lift/Lower switch for LOWER signal
DI12_B7	Input from S10 Idle/PLTF/Base Key switch for Base Signal
DI15_B12	Input from S10 Idle/PLTF/Base Key switch for Platform signal
DI13_B8	Input from S11 Powerdeck switch for PD Extend (SJ3220 option only)
DI17_B14	Input from LS7, Anti overrising option (KC only)
DI6_B1	Input from wire 13B from the emergency lowering module
DI8_B3	Input from LS7, Anti overrising option (KC only)
DI14_B11	Input from S6 Brake Release Switch for Manually Releasing Brake signal (ON for Release)
DI9_B4	Input from Tilt switch TS1 (ON when level)
DI10_B5	Input from S11 Powerdeck switch for PD Retract (SJ3220 option only)
DI0_A8	Input for Charger Cutout Interlock switch (ON when not charging)
DI4_A12	Input from LS1, LS2, Pothole protection limit switches.(ON Stowed) (N/A for SJ3213 micro & SJ3219 micro models)
DI5_A23	Ground input from Telematics option (ON when OK to operate)
DI3_A11	Not used
JOYD_1	Input from LIFT/OFF/DRIVE switch S3; Drive select
JOYD_2	Input from LIFT/OFF/DRIVE switch S3; Lift select
JOYD_3	Input from Horn switch S8
JOYD_4	Input from Speed selector switch S27
JOYD_5	Lift Enable ON (OFF with SGLE option unless S22 switch is held)
JOYD_6	Lift Disable OFF (ON with SGLE option unless S22 switch is held)
JOYD_7	Input from Platform E-Stop S4 for Platform signal
JOYD_8	Not used
JOYD_9	Not used
JOYD10	Not used
JOYD11	Not used
JOYD13	Input from enable switch
JOYD14	Input from left steer switch
JOYD15	Input from right steer switch

2237AR-2

5.8-9 Tester main menu table C

OUTPUTS	
A27	C1 motor contactor 0 or 100%
A28	Right motor BK1 brake 0 or 37%, up to 80% initial
A30	Left motor BK1 brake 0 or 37%, up to 80% initial
A26	Lower solenoid valve 2H-13 0 or 50% (NA, AS, KC) 3219 0 to 50% (CE) 3219, (all regions) 3215
A25	Output for lift solenoid valve 3H-14
A24	Output for steer right solenoid valve 4H-23
A1	Output for steer left solenoid valve 4H-24
A2	Output (pulsed) for beeper BP-29
JOYSTICK:FAULT	N/A
JOYO1	Platform e-stop/overload lamp PL-1
JOYO2	Drive lamp PL-3
JOYO3	Lift lamp PL-4
JOYO4	Low battery lamp PL-5
JOYO5	Not used
JOYO6	Not used
JOYO7	Not used
JOYO8	Not used
ALARM BEEPER	Not used (no valid values)
ALARM FLASHER	Not used (no valid values)

ANALOGS	
CHB_L-A19	“B” signal from left speed sensor (turns ON and OFF when wheels are turning)
CHA_R-A9	“A” signal from right speed sensor (turns ON and OFF when wheels are turning)
CHB_R-A20	“B” signal from right speed sensor (turns ON and OFF when wheels are turning)
A5	Pressure transducer input voltage 0.5-4.5 V
A16	Steering sensor input voltage 0.5-4.5 V (no valid values on models SJ3215 micro, SJ3219 micro, SJ3215 E, and SJ3219 E)
A14	Not used (no valid values)
A22	Not used (no valid values)
A34	Not used (no valid values)
A35	Not used (no valid values)
B9	Signal from position sensor (no valid values, see HEIGHT1)
B10	Signal from position sensor (no valid values, see HEIGHT2)
JOYA 1	Joystick position (full stroke REV=6554, NEUTRAL=32768, full stroke FWD=58981).
JOYA 2	Not used
JOYA 3	Not used
JOYA 4	Not used
JOYA 5	Not used
JOYA 6	Not used
JOYA 7	Not used
HEIGHT1 [V]	Signal 1 from height sensor (0.5-4.5 V)
HEIGHT2 [V]	Signal 2 from height sensor (0.5-4.5 V)
LIFT PRESS [V]	Voltage reading from the pressure transducers

INTERLOCK	
EMCY_LOWER_CNT	Emergency lowering counter
TILT_PITCH	Reading of the internal tilt sensor in degrees from front to back
TILT_ROLL	Reading of the internal tilt sensor in degrees from side to side.
TILT_SW_STATUS	Status of the internal tilt sensor. 0=level. 1=tilted
ON GRADE	Status of the internal tilt sensor when driving on grade. 0=0-2.21 degrees. 1=2.22-15.7 degrees (FWD). 2.22-17.9 degrees (REV). 3=over 15.8 degrees (FWD). over 18 Degrees (REV)

2237AR-3

5.8-10 Tester sec menu

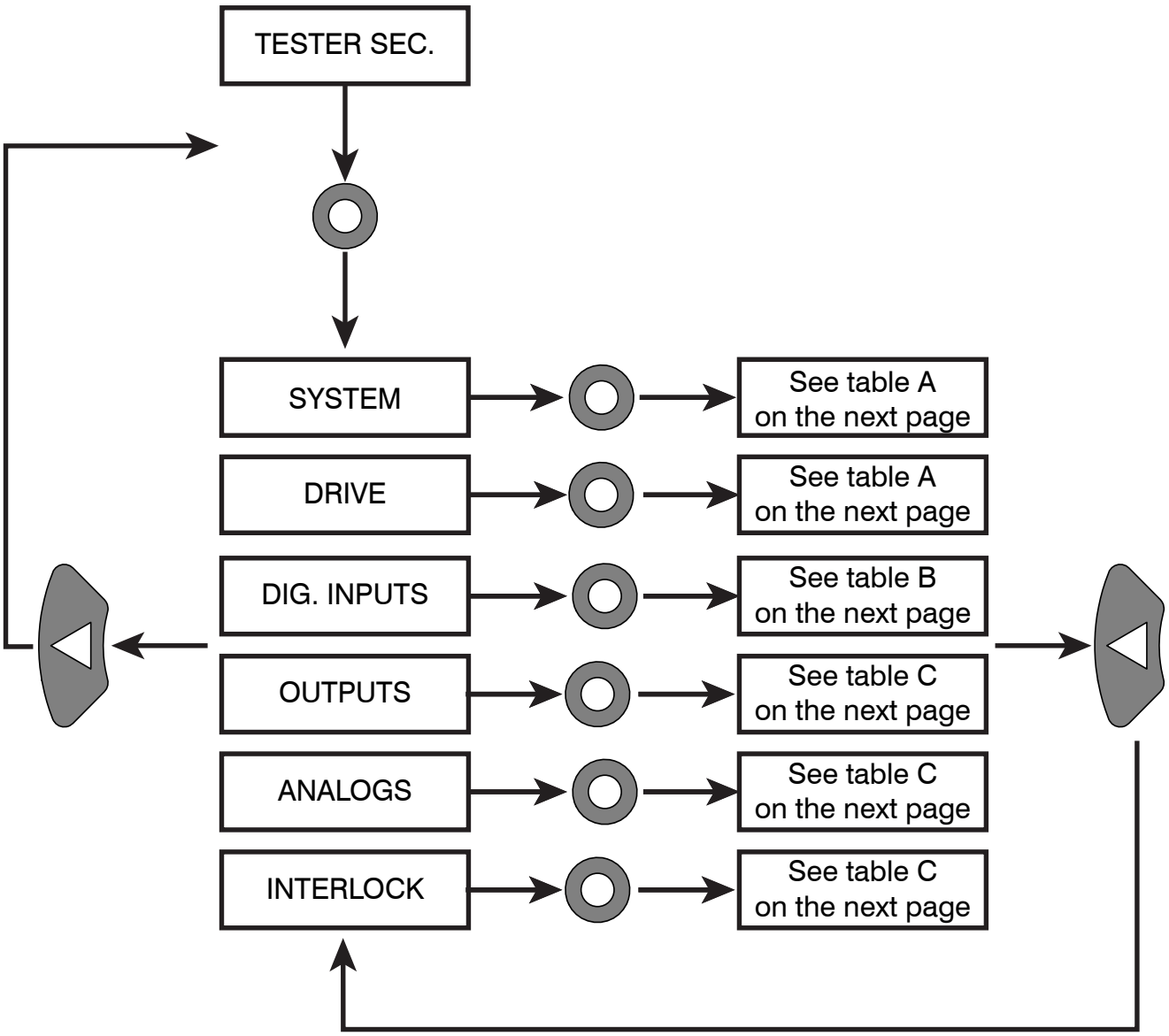

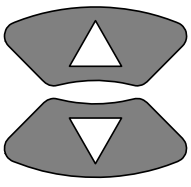

To scroll through menu items



To select

5.8-11 Tester sec menu table A

SYSTEM	
KEY VOLTAGE	Key voltage pin A3 measured in real time
BATTERY VOLTAGE	Voltage from 03B contactor to B+ on controller
DC BUS CURRENT	Estimation of the battery current based on the working point.
BATTERY CHARGE	Estimation of the battery charge based on the battery voltage
PLT HEIGHT (%)	Estimation of platform height, calculated from the angle transducer.

DRIVE	
MOTOR VOLTAGE	Estimated motor voltage.
TARGET SPEED (HZ)	Targeted driving speed command in Hz.
MEAS SPD MAIN	DC current occurrence on the right motor
DRV AMP MAIN	DC current occurrence on the left motor
STEER ANGLE	Angle of steer wheels in degrees. 0 degrees with wheels straight. N/A for models SJ3215 micro, SJ3219 micro, SJ3215 E, and SJ3219 E.
CONTROLLER TEMP	Internal temperature of the controller.
MOTOR TEMP	Internal temperature of the left motor.
DC PUMP AMP	DC current of the pump motor (A)
DC PUMP VOLT	Percentage of voltage applied to the pump motor

2237AR-4

5.8-12 Tester sec menu table B

DIG. INPUTS	
DI16_B13	Not used
DI1_A6	Not used
DI2_A7	Input from Platform E-Stop S4 for Platform signal
DI7_B2	Input from S2 Lift/Lower switch for RAISE signal
DI11_B6	Input from S2 Lift/Lower switch for LOWER signal
DI12_B7	Input from S10 Idle/PLTF/Base Key switch for Base Signal
DI15_B12	Input from S10 Idle/PLTF/Base Key switch for Platform signal
DI13_B8	Input from S11 Powerdeck switch for PD Extend (SJ3220 option only)
DI17_B14	input from LS7, Anti overrising option (KC only)
DI6_B1	Not used
DI8_B3	Input from LS7, Anti overrising option (KC only)
DI14_B11	Input from S6 Brake Release Switch for Manually Releasing Brake signal (ON for Release)
DI9_B4	Input from Tilt switch TS1 (ON when level)
DI10_B5	Input from S11 Powerdeck switch for PD Retract (SJ3220 option only)
DI0_A8	Input for Charger Cutout Interlock switch (ON when not charging)
DI4_A12	Input from LS1, LS2, Pothole protection limit switches (ON Stowed)
DI5_A23	Ground input from Telematics option (ON when OK to operate)
DI3_A11	Not used
JOYD_1	Input from LIFT/OFF/DRIVE switch S3; Drive select
JOYD_2	Input from LIFT/OFF/DRIVE switch S3; Lift select
JOYD_3	Input from Horn switch S8
JOYD_4	Input from Speed selector switch S27
JOYD_5	Lift Enable ON (OFF with SGLE option unless S22 switch is held)
JOYD_6	Lift Disable OFF (ON with SGLE option unless S22 switch is held)
JOYD_7	Input from Platform E-Stop S4 for Platform signal
JOYD_8	Not used
JOYD_9	Not used
JOYD10	Not used
JOYD11	Not used
JOYD13	Input from enable switch
JOYD14	Input from left steer switch
JOYD15	Input from right steer switch

2237AR-5

5.8-13 Tester sec menu table C

OUTPUTS	
B22 EVP2	Output to CR30 brake relay
B16 EV5	Not used
B17 EV6	Not used
B18 EV7	Base e-stop/overload lamp PL-2
B20 EV8	Flashing light PL-22
JOYSTICK:FAULT	N/A
JOY01	Platform e-stop/overload lamp PL-1
JOY02	Drive lamp PL-3
JOY03	Lift lamp PL-4
JOY04	Not used
JOY05	Not used
JOY06	Not used
JOY07	Not used
JOY08	Not used

ANALOGS	
CHA_L-A17	Input from Channel A signal from left motor speed sensor (turns ON and OFF when wheels are turning)
CHB_L-A19	Input from Channel B signal from left motor speed sensor (turns ON and OFF when wheels are turning)
A5	Signal from pressure transducer
A16	Steering sensor input voltage 0.5-4.5 V (no valid values on models SJ3215 micro, SJ3219 micro, SJ3215 E, and SJ3219 E)
A14	Not used (no valid values)
A22	Not used (no valid values)
A34	Not used (no valid values)
A35	Not used (no valid values)
B9	Signal from position sensor (no valid values, see HEIGHT2 on Main Tester)
B10	Signal from position sensor (no valid values, see HEIGHT1 on Main Tester)
JOYA 1	Joystick position (full stroke REV=6554, NEUTRAL=32768, full stroke FWD=58981).
JOYA 2	Not used
JOYA 3	Not used
JOYA 4	Not used
JOYA 5	Not used
JOYA6	Not used
JOYA 7	Not used

INTERLOCK	
TILT_PITCH	Reading of the internal tilt sensor in degrees from front to back
TILT_ROLL	Reading of the internal tilt sensor in degrees from side to side.
TILT_SW_STATUS	Status of the internal tilt sensor. 0=level. 1=tilted

2237AR-6

5.8-14 Parameter menu

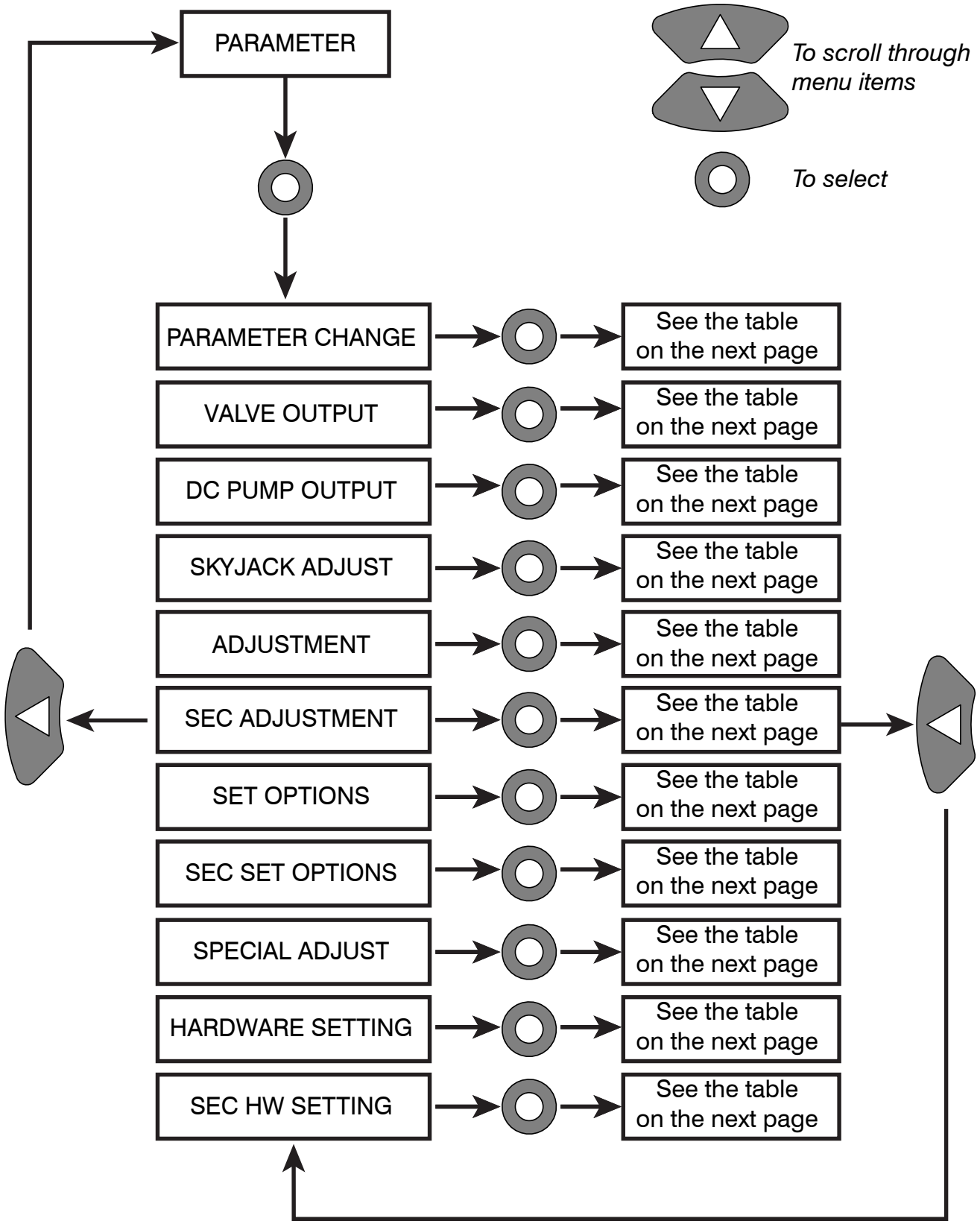

5.8-15 Parameter menu table

PARAMETER CHANGE	VALVE OUTPUT	DC PUMP OUTPUT	SKYJACK ADJUST	ADJUSTMENT
MAX SPEED FORW	SEV8 FLASHER OUT	MAX SPEED LIFT	MACHINE TYPE	NO VALID VALUES
MAX SPEED REV		MAXSTEER PUMP SP	REGION	
		MINSTEER PUMP SP	BATTERY TYPE	
			POWER SAVING TIM	
			EMCY LOW RESET	
			OVERRIDE M START	
			MOTION ALARM	
			BOTH LOWER ELEVATE	
			DELTA-Q CHARGER	
			ANTI OVER RISING	
			ELEVATED DRIVE	
			TELEMATICS	
			OUTDOOR MODE	

SEC. ADJUSTMENT	SET OPTIONS	SEC. SET OPTIONS	SPECIAL ADJUST	HARDWARE SETTING	SEC. HW SETTING
NO VALID VALUES	NO VALID VALUES	TILT CALIBRATE	DEBUG CANMESSAGE	NO VALID VALUES	NO VALID VALUES

2237AR-7

After you change a parameter you must follow the “Store Data” flowchart to save the change. Refer to *5.7-19 Store data menu.*

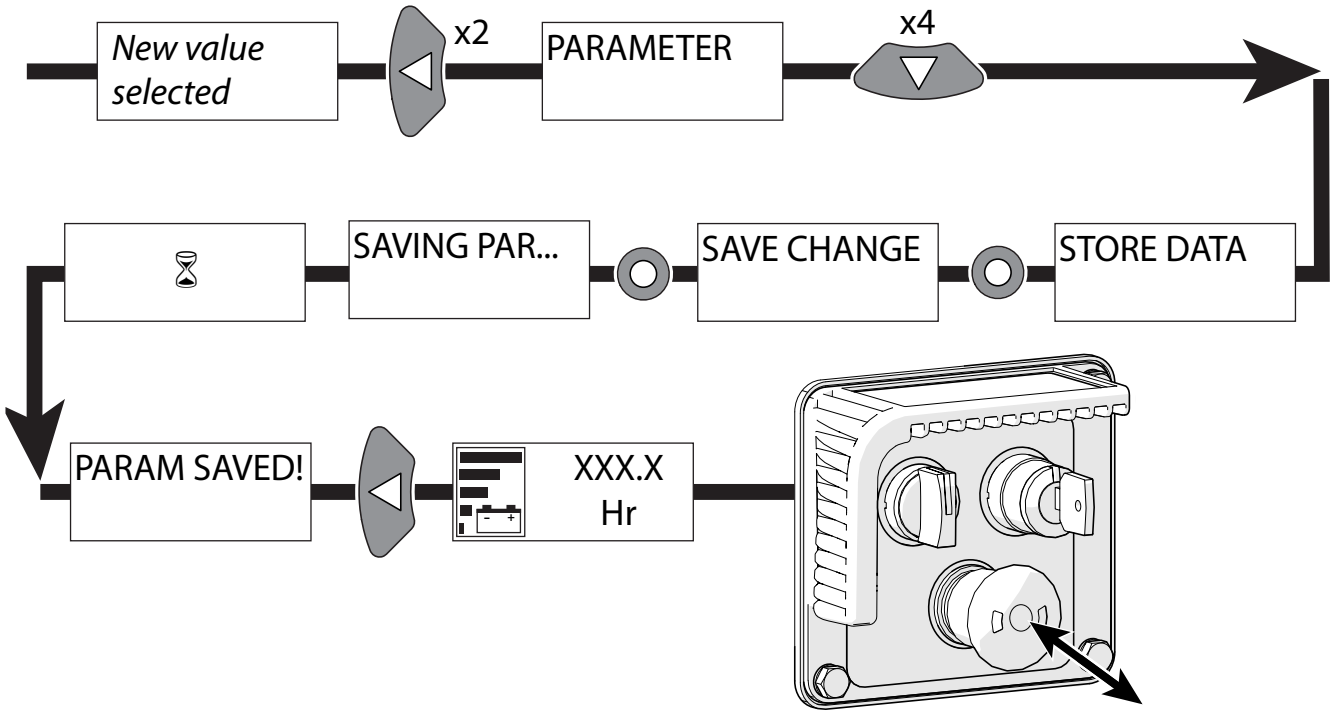

5.8-16 Machine setup menu

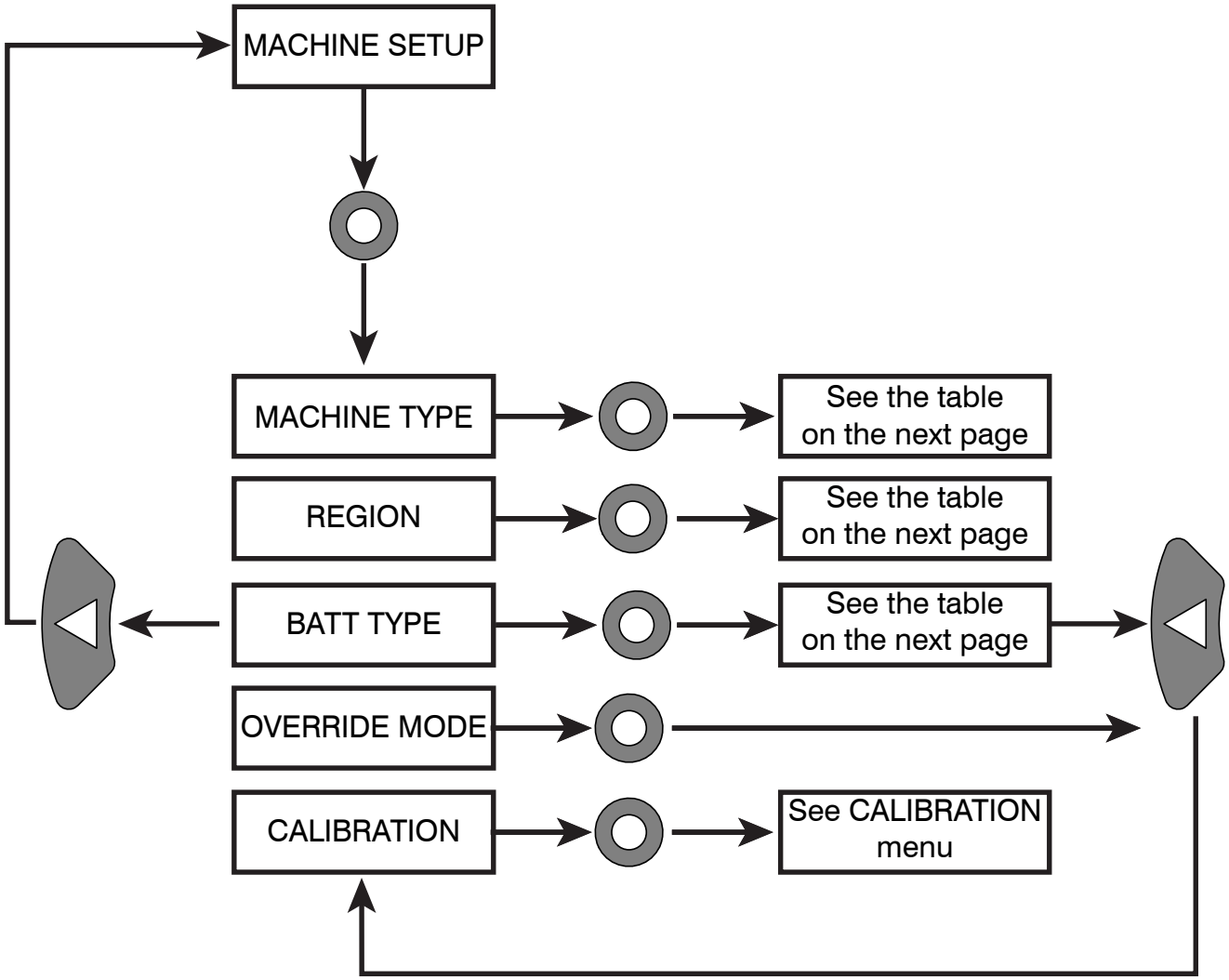

Note: When you set up a new controller, if a MEWP was built with options (e.g., flashing light, telematics, all-motion alarm, anti-overrising posts (KC), etc.), you will need to do additional setup. Refer to *5.8-14 Parameter menu* and *5.8-15 Parameter menu table.*

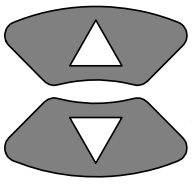

To scroll through menu items



To select

5.8-17 Machine setup menu table

MACHINE TYPE	REGION	BATT TYPE	
SJ 3215	ANSI	LEAD 155Ah	US Battery, US 12V XC2, 12 V, 155 Ah
SJ 3219	CE	LEAD 232Ah	US Battery, US 2200 XC2, 6 V, 232 Ah
SJ 3220	AS	LEAD 255Ah	US Battery, US 145 XC2, 6V, 251 Ah Tianneng, 3-EVF-200G, 6 V, 260 Ah
SJ 3226	KC		
SJ 4726	AP	AGM 220Ah	Discover, EVTGC6A-A, 6V, 220 Ah
SJ 4732		LEAD 225Ah	Trojan, T-105, 6 V, 225 Ah
SJ 4740		LEAD 210Ah	
3213M		LEAD 310Ah	US Battery, US 12V XC2, 12 V, 155 Ah *for SJ4740 E two batteries in parallel*
3219M			
		AGM 280Ah	Discover, EV12A-A, 12 V, 140 Ah *for SJ4740 E two batteries in parallel*
		LEAD 300Ah	

2237AR-8

5.8-18 Logged alarms M/S menu

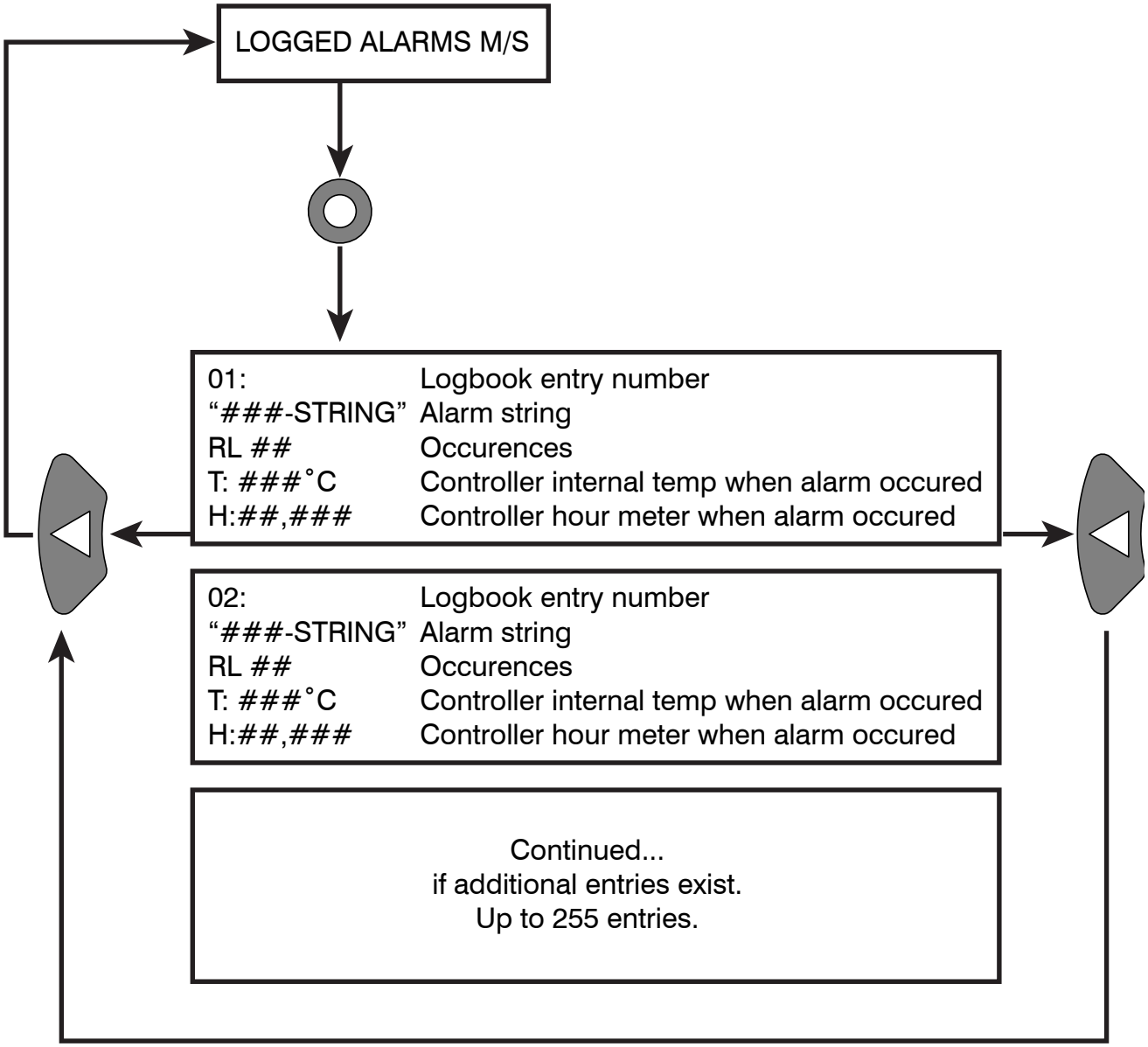

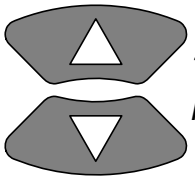

To scroll through menu items



To select

5.8-19 Store data menu

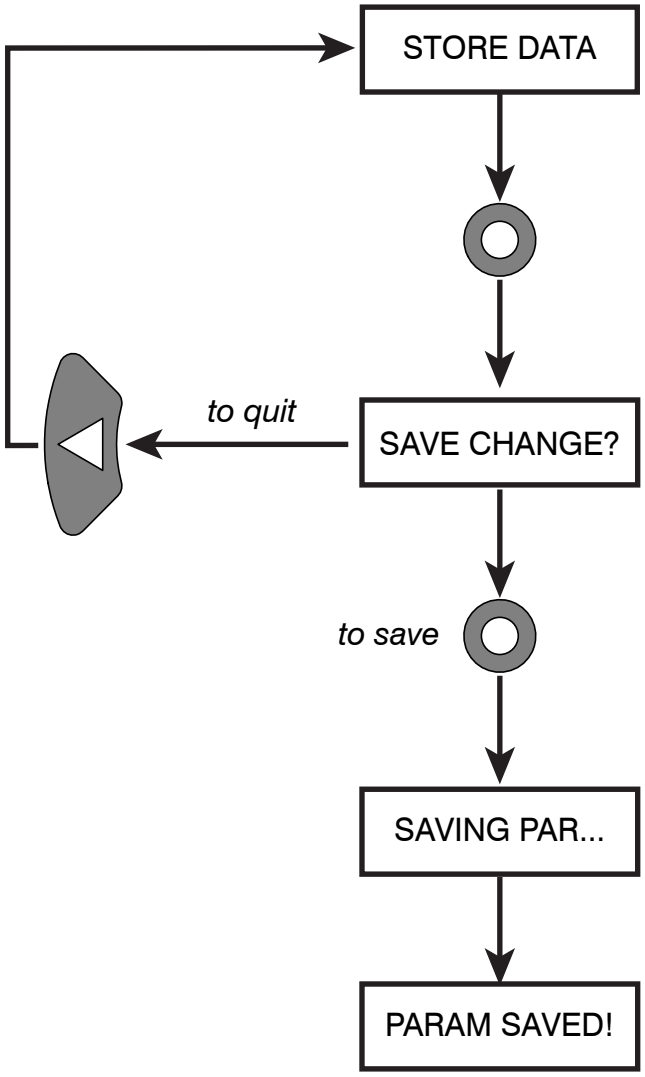

Display will flash: "SAVING PAR..." until save is done

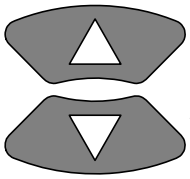

To scroll through menu items



To select

5.8-20 Calibration menu

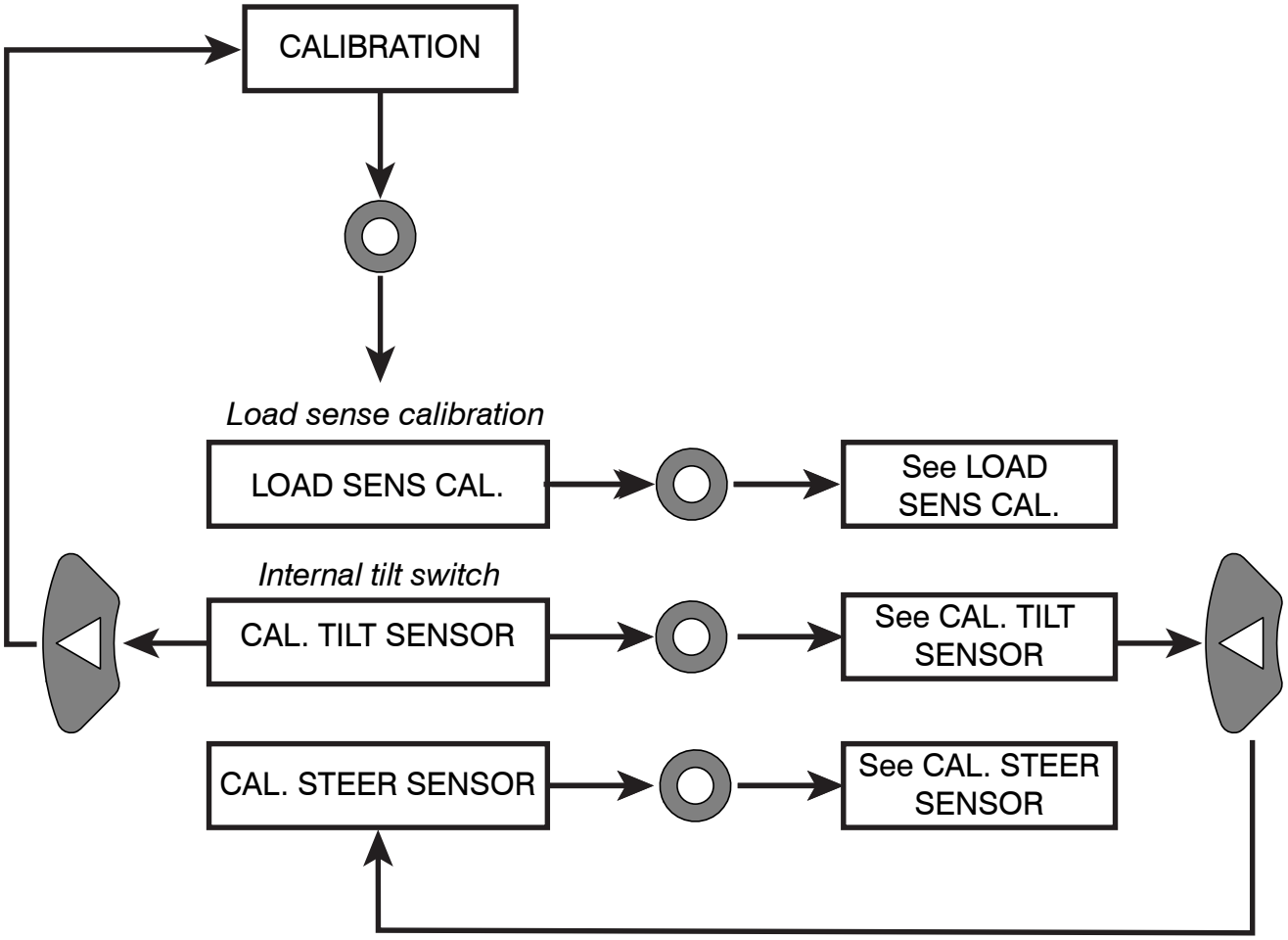

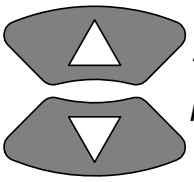

To scroll through menu items



To select

5.8-21 Load sense calibration - loaded menu

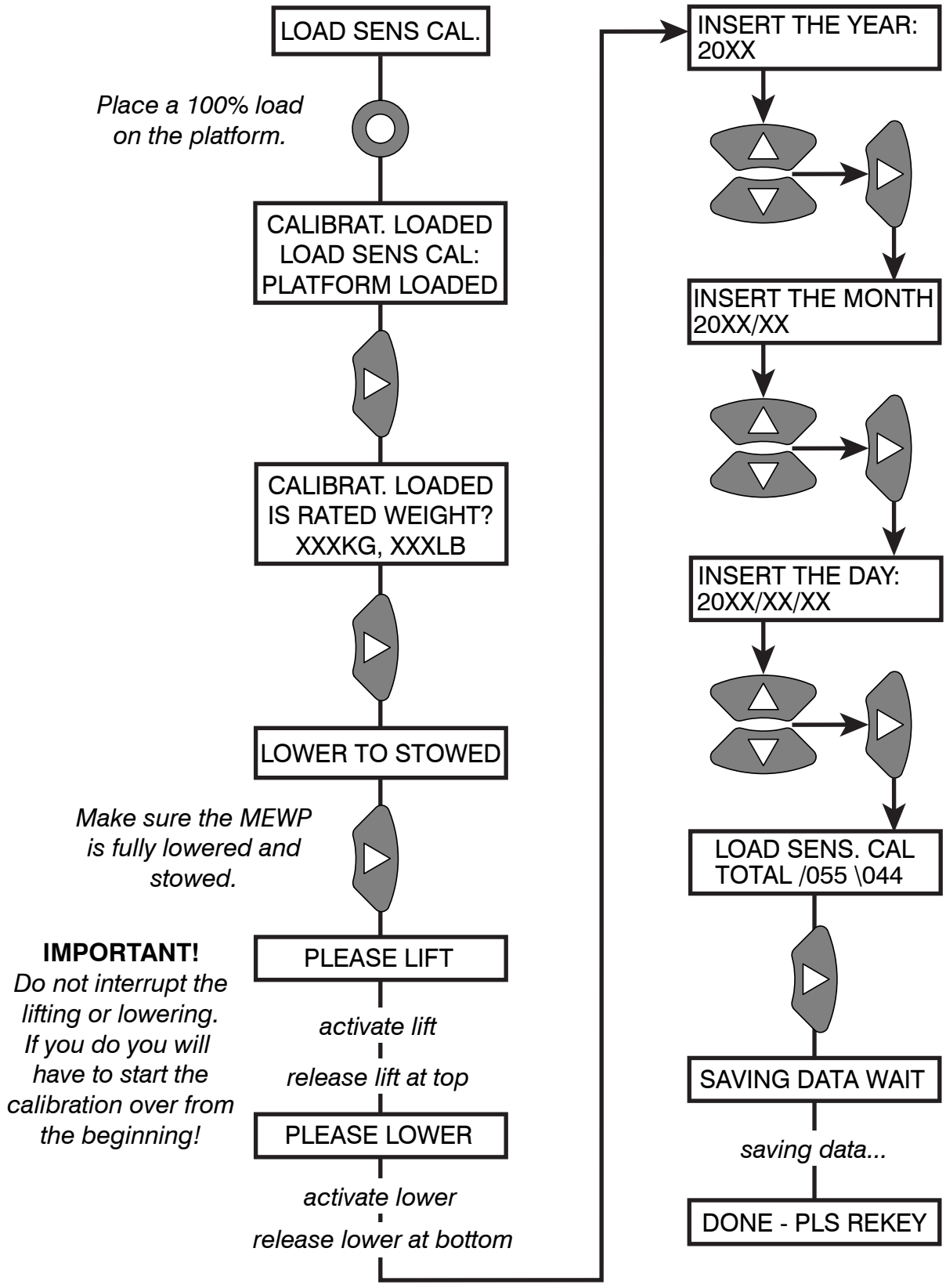

5.8-22 Load sense calibration - empty menu

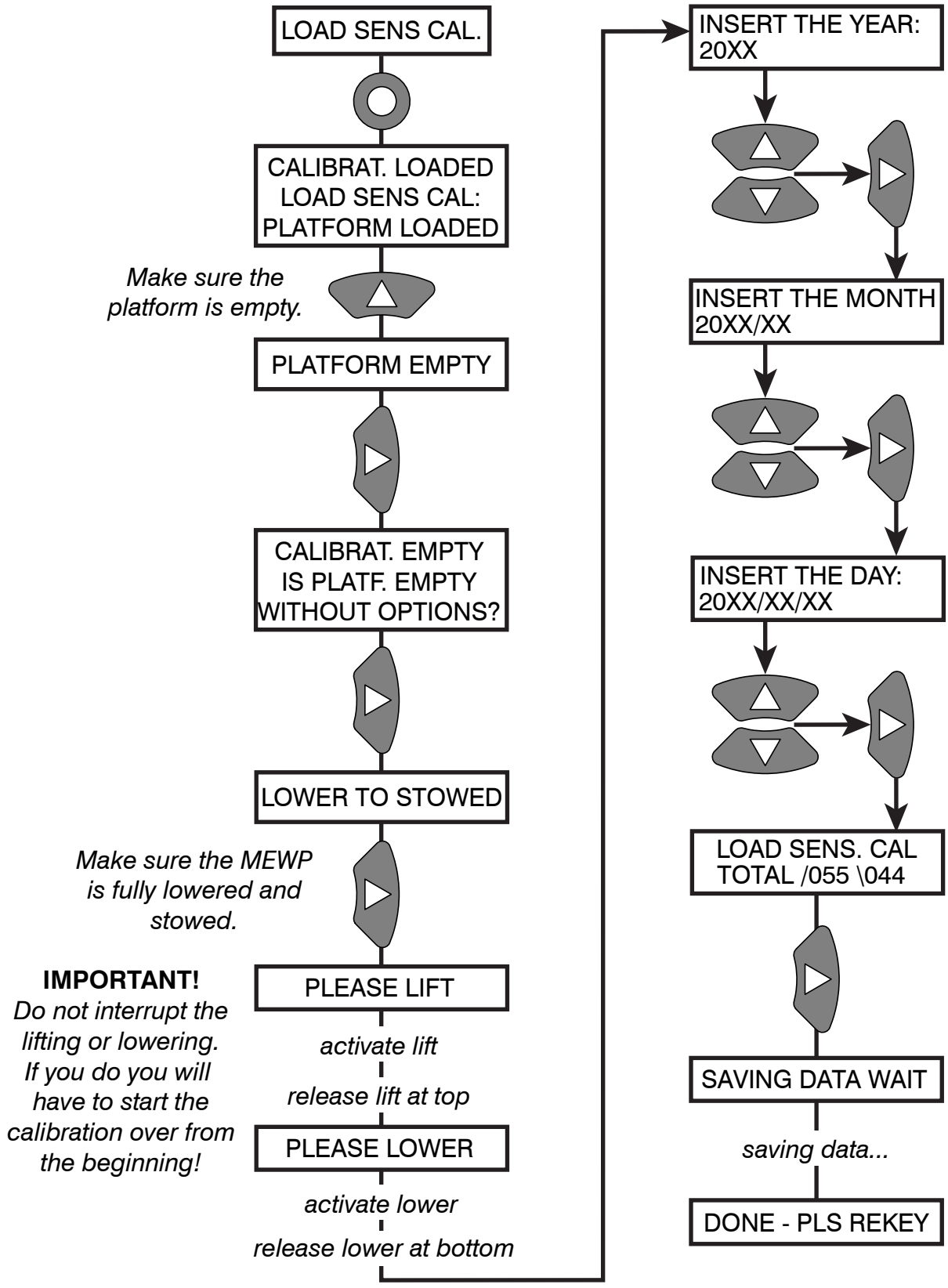

5.8-23 Calibrate internal tilt sensor menu

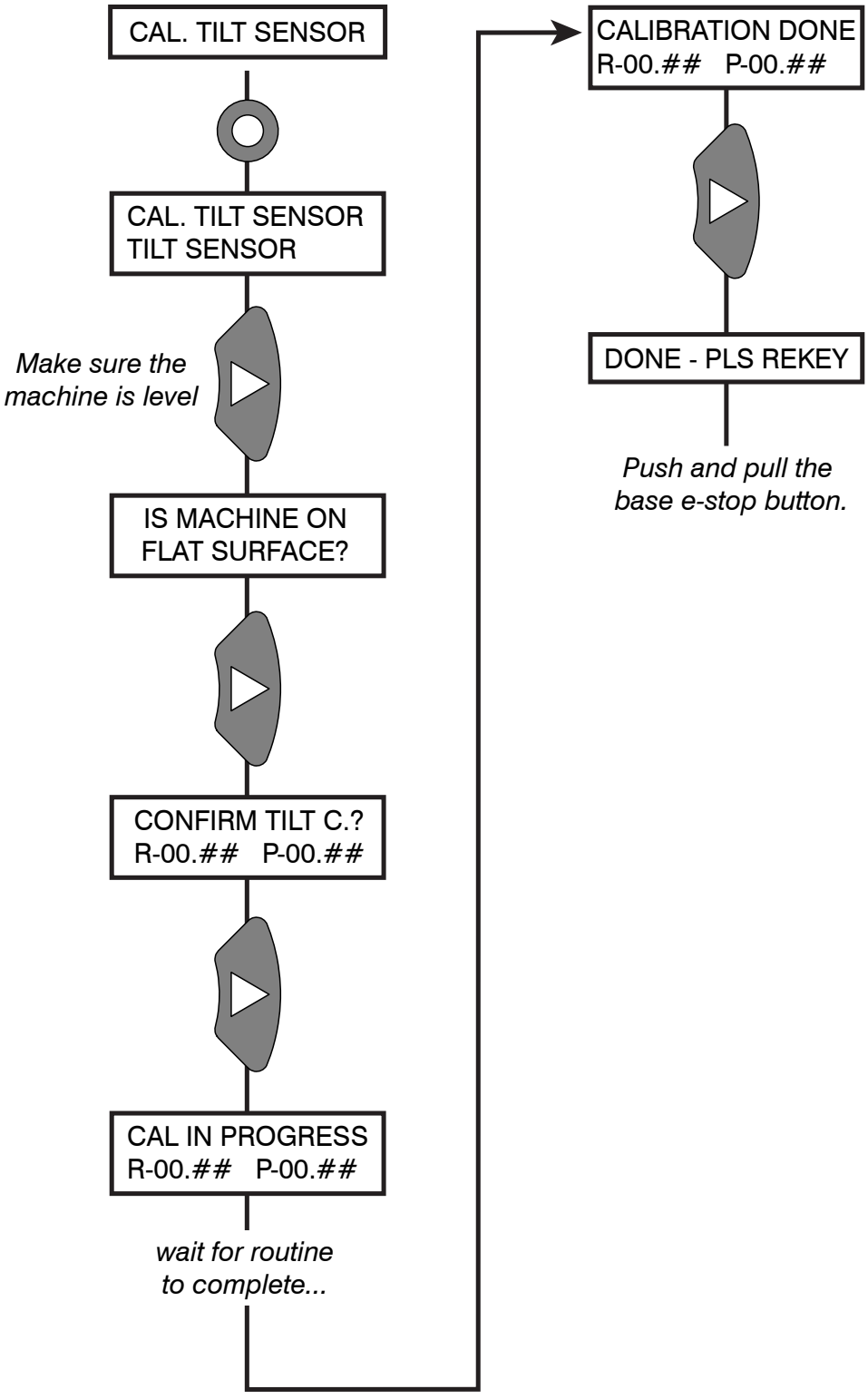

5.8-24 Calibrate steer sensor menu

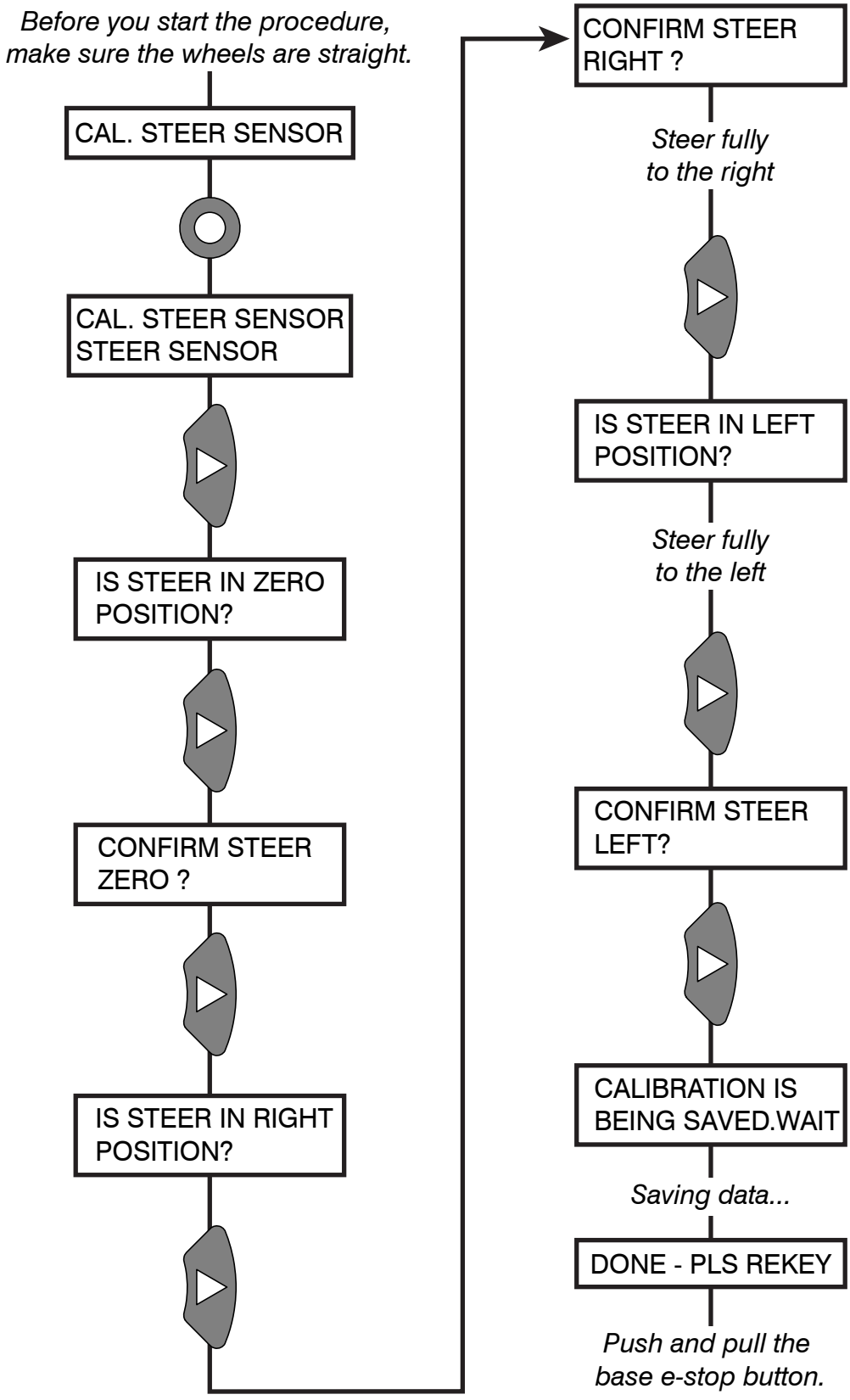

5.8-25 Skycoded error codes and troubleshooting

Confirm the correct model, region, and battery type are selected before you start troubleshooting.

Code	Code String	Cause	Troubleshooting
8	8-CTRL ERR	Controller internal error.	Cycle the power. If still present, replace controller.
17	17-CTRL ERR	Controller internal error.	Replace the controller. Cycle the power. If still present, replace controller.
18	18-CTRL ERR	Controller internal error.	Cycle the power. If still present, replace controller.
19	19-CTRL ERR	P1 pin 3 detect low voltage, check wire connection and power cable voltage.	Could be internal to controller or internal damage to wire A3 (continuity might be OK, but cannot hold high amp). Replace harness.
28	28-PMP VLT LOW	Pump motor voltage lower than expected.	Check power cable connection and leakage between motor and motor frame.
29	29-PMP VLT HI	Pump motor voltage higher than expected.	Check power cable connection and leakage between motor and motor frame.
30	30-TRAC VLOW	Traction motor voltage lower than expected.	Check power cable connection and leakage between motor and motor frame.
31	31-TRAC VHI	Traction motor voltage higher than expected.	Check power cable connection and leakage between motor and motor frame.
37	37-CONTCT CLOSE	Power to contactor is properly connected, but contactor is stuck closed.	Check the condition of the contactor
38	38-CONTCT OPN	Power to contactor is properly connected, but contactor is stuck open.	Check power cable connection and leakage between motor and motor frame. Check power cable to drive motor and pump motor.
52	52-PMP AMP LOW	Pump motor running current is lower than commanded.	Check pump power cable connection.
53	53-PMP AMP HI	Pump motor running current is higher than commanded	Check pump power cable connection.
60	60-CTRL ERR	Controller internal error. Cycle the power. If still present, replace controller.	Cycle the power. If fault is still there, replace the controller.
62	62-CTRL TEMP	Controller internal temperature is too high. Exceeding 85 °C.	Check the tester menu DRIVE-CONTROLLER TEMP. Allow the controller to cool if hot. If the fault occurs when the controller is cold, replace the controller.
65	65-TRAC MOT TMP	Traction motor temp is too high.	Check tester menu DRIVE-MOTOR TEMP. If temp is incorrect, replace the motor.
66	66-LOW BATTERY	Battery state of charge is lower than 10%.	Check the condition of the batteries and charge.
74	74-CTRL ERR	Controller internal error. Cycle the power. If still present, replace the controller.	Cycle the power. If the fault is still there, replace the controller.
75	75-CTRL ERR	Controller internal error. Cycle the power. If still present, replace the controller.	Cycle the power. If the fault is still there, replace the controller.
79	79-ENABLE ERR	Joystick is active before enable is engaged.	Check on tester. Repeat the command with the correct sequence. Check joystick wiring.

Code	Code String	Cause	Troubleshooting
118	118-BMS FAULT 118-SGS ERR	The Skyprotect (SGS) option is active, but the controller is not communicating with the sensor, or an incorrect platform control box is being used.	Verify the control box is correct for the machine and is equipped with the Skyprotect option. Check wiring to the control box and SGS sensor.
119	119-STEER OR	The voltage reading of the steer sensor is outside the calibrated range by ±500 mV, or is less than 0.5 V or greater than 4.5 V.	Check the calibrated values. Check the wiring supply voltage. Check for a short/open circuit on the steer sensor.
121	121-FACTORY MODE	Machine is in factory mode. Can drive and lift, needs to be set up.	Controller needs to be set up. Refer to *5.8-26 Set up a new Skycoded controller.*
122	122-ELOW SHRT +	A29 short to power.	Check wiring on pin A29. Short to B+ detected.
123	123-LOWER SHRT -	Short to B- detected at A29.	Check wiring on pin A29. Short to B- detected.
126	126-HEIGHT_ ERRXX	OUTDOOR MODE 01: Machine is at maximum outdoor height. Lifting is inhibited.	Lower the platform.
		OUTDOOR MODE 02: Machine at overheight. Lifting and driving is inhibited. Outdoor switch is active overheight.	Lower the platform below the over height threshold.
129	129-JSTK HRTBT	Joystick failed, no CAN heartbeat.	Check the joystick wiring. Replace the joystick.
130	130-EBRK RELEASE	Emergency brake released.	Emergency brake release is active. Exit Tow mode to clear. Enable any function to clear.
131	131-ANTI OVRAISE	Anti overrise is triggered, no lifting allowed.	Lower the platform (KC only).
132	132-ANTOVR ERR	Anti overrise signal from normally open/close are the same, check wiring.	Check limit switch wiring on the Anti Overrise Option (KC only).
133	133-TELEMATIC	Telematic interlock, no password or lost CAN communication from telematic device.	Enter correct PIN password (if equipped). Check wiring and condition of the telematics.
134	134-TRAC LO BAT	Battery voltage is too low to drive, Lead acid battery <15.8V, AGM <19V, Lithium <20V.	Check the condition of the batteries and charge.
135	135-OVER GRADE	Machine over climbing range (too steep).	Check the calibration of the internal tilt sensor. Replace the controller.
137	137-CHARGER CAN	Charger does not send startup CAN message, need to plug in charger at least 15 sec to initialize charger.	Verify the charger is connected and powered on for a minimum of 15 seconds. Verify the charger CAN communication. Check the wiring.
140	140-LIFT LO BAT	Battery voltage is too low to lift, Lead acid battery <18.8V, AGM <21V, Lithium <22V.	Check the condition of the batteries and charge.
141	141-TILT ERR	Faulty controller.	Replace the controller.
142	142-CHARGING	Charger is connected.	Disconnect charger. Check wiring
143	143-POTHO ERR	143-POTHO ERR01: pothole deployed when platform stowed. 143-POTHO ERR02: pothole NOT deployed when lifted.	Check pothole position and connections.
144	144-CTRL ERR	Faulty controller.	Replace the controller.

Code	Code String	Cause	Troubleshooting
145	145-GRADE ERR	Faulty controller.	Replace the controller.
146	146-PLT OVERLOAD	Platform is overloaded.	Check the load on the platform. Check the load cell calibration.
147	147-LS NO CAL	147-LS NO CAL 01: Loadsense is not calibrated.	Perform the load calibration.
		147-LS NO CAL 02: Loadsense is calibrated but the result is out of range.	Check height and pressure sensor reading
148	148-LIFT PRES OR	Lifting pressure transducer voltage is out of range: below 0.4V or above 4.6V. Or service bar is in place	Check the wiring to the pressure transducer. Check that the pressure transducer is not damaged. Check for proper operation of the external tilt switch.
149	149-HEIGHT MISM	The height from the main and redundant height sensor signals are more than 5% different for more than 5 seconds.	Check the main tester menu ANALOGS/ HEIGHT1 and HEIGHT2. The two readings added together should equal 5V (+/-0.2V) at any height. (HEIGHT1=3.75V, HEIGHT2= 1.25V when stowed) If readings are good, do an empty calibration.
150	150-HEIGHT OR	Height sensor voltage is out of range: below 0.4V or above 4.6V.	Check the wiring for the rotary height sensor. Check that the rotary height sensor is not faulty. Verify that the supply voltage is present and correct to the sensor.
151	151-KEY SW ERR	Platform and base modes are ON/ OFF at the same time.	Check the wiring and the base/platform switch.
152	152-ENABL TIMEOT	Enable button is pushed with no command for drive/lift within 10 sec	Release the enable switch.
153	153-ENC ERR	May be caused by driving on uneven surface.	Cycle the power. Check the driving surface is even and smooth. Check the motor wiring for speed sensor wires. Cycle the power again and drive it on a flat surface. Swap the motor.
154	154-TRAC MISM	Alarm on Master is Right Side Motor and on Slave is Left Side Motor.	Cycle the power. Check the driving surface is even and smooth. Check the motor wiring for speed sensor wires. Cycle the power again and drive it on a flat surface. Swap the motor.
155	155-SPD MISM	Alarm on Master is Right Side Motor and on Slave is Left Side Motor.	Cycle the power. Check the driving surface is even and smooth. Check the motor wiring for speed sensor wires. Cycle the power again and drive it on a flat surface. Swap the motor.

Code	Code String	Cause	Troubleshooting
156	156-BASE SEQ	156-BASE SEQ 01: switching to base mode with base lift input active.	Repeat the command sequence. Check the wiring.
		156-BASE SEQ 02: switching to base mode with base lower input active.	
		156-BASE SEQ 04: switching to base mode with emergency lowering active input active.	
		156-BASE SEQ 08: switching to base mode with brake release input active.	
		156-BASE SEQ 81: switching to platform mode with joystick out of neutral	
		156-BASE SEQ 82: switching to platform mode with steer left input active.	
156	156-BASE SEQ	156-BASE SEQ 84: switching to platform mode with steer right input active.	Repeat the command sequence. Check the wiring.
		156-BASE SEQ 88: switching to platform mode with Platform Power Deck Extend input active.	
156	156-BASE SEQ	156-BASE SEQ 90: switching to platform mode with Platform Power Deck Retract input active.	Repeat the command sequence. Check the wiring.
		156-BASE SEQ A0: switching to platform mode with Emergency Lowering Active input active.	
		156-BASE SEQ C0: switching to platform mode with Brake Release input active.	
157	157-TRAC ERR	A mismatch occurred in the sampling of a subset of inputs between the two microcontrollers. The hexadecimal value “XX” facilitates Zapi technicians debugging the problem.	Ask for assistance to a Zapi technician.
158	158-DRIVE+LIFT	Drive/lift mode command received at the same time. If SGLE is installed, this error appears when trying to lift or drive without holding in the SGLE button on the side of the control box.	Verify the joystick module is not internally damaged. Check wiring from the drive enable and lift enable switches in the joystick module. If SGLE is installed, press the SGLE button to clear the error.
159	159-STEER R+L	Steer left/right command received at the same time.	Verify the Joystick Module is not internally damaged. Check wiring from Steer Left and Steer right switches in joystick module.
160	160-TILTED	Machine is tilted.	Check the surface. Check the tilt sensor installation/ calibration.
161	161-CAN KO	The display does not detect CANbus activity from the controller. It might appear briefly when the upper E-Stop is pushed in.	Check the CAN wiring from the controller to the display.
163	163-TRAC ERR	Alarm related to the motor control algorithm.	Ask for assistance from Zapi technicians.

Code	Code String	Cause	Troubleshooting
164	164-POWER SAVE	Machine in power save mode. Default is 5 min no action command.	Activate a function to clear - drive, lift, horn
169	169-POWER SAVE	This alarm occurs only when the controller is configured as PMSM and the feedback sensor selected is the encoder. The A and B pulse sequence is not correct. The hexadecimal value “XX” facilitates Zapi technicians debugging the problem.	Check the wiring. If the motor direction is correct, swap the A and B signals. If the motor direction is not correct, swap two of the motor cables. If the problem is not solved, contact a Zapi technician.
170	170-VOLT OR	Battery voltage too low/high.	Check the battery voltage.
175	175-TRAC ERR	Could be an issue with the speed sensor positioning/mounting.	Check both the electric and the mechanical functionality of the sensor. Check the wire crimping. Check the mechanical installation of the sensor; the issue may be it slips inside its housing. If the problem is still present after replacing the sensor, the failure is most likely in the controller; replace it.
177	177-BRK SHORT	Brake coil on motor is shorted / Brake relay is shorted. / Main Harness is shorted at A28 or A30 to 08C.	Check the brake coil for short. Check for brake relay for short. Check the harness for short. Replace/repair the shorted component.
178	178-TRAC TEMP	Motor temperature is too high over 170 °C/338 °F.	Check the MOTOR TEMPERATURE in TESTER. If hot, allow it to cool down. If the temperature reading is incorrect, replace the motor.
179	179-STEER SENSOR	Steer sensor voltage is out of range.	Measure the Voltage from the Steering Sensor and compare with the calibrated STEER LEFT; STEER RIGHT voltage values. Check the Sensor for damage as well as open or shorted Supply wiring to Sensor.
180	180-TRAC OVLD	The motor current is over the designed current.	Cycle the power. Manually release the brake. Motor should spin freely if not, check if the brake is released. Replace the motor. If the brake is not released, replace the brake.
181	181-ENCODER ERR	Speed sensor signals are reversed/ faulty.	Check speed sensor functions. Replace if needed.
182	182-TRAC ERR	This alarm is related to the traction motor(s) encoder.	Possible swapped phases of encoder sensor(s).
183	183-NO ELEV DRV	Drive elevated is not allowed.	Default ON parameter for KC and OFF for other regions. It can be turned on/off by password 1275 on display under “SKYJACK ADJUST”.
184	184-CHK SGLE SW	SGLE switch is not pushed while command lifting. Or check control box wiring.	Check the SGLE wiring and switch if equipped.
186	186-PUMP ERR	Current leakage in DC Motor	Check for DC motor leakage. Replace DC motor, if needed.
187	187-LIFT+LOWER	Lift and Lower active at same time	Check the joystick CAN connections. Check lower control box lift/lower switch.
188	188-CTRL ERR	Faulty controller.	Replace the controller.
189	189-PLT SEQ ERR	Function active without enable switch.	Repeat the command sequence with enable switch. Replace joystick if issue persists.
190	190-CHK PMP CONN	Voltage fluctuation during start up at P- Pump motor or controller.	Check all connections at pump motor. Check pump motor leakage. Replace controller if no problem found.

Code	Code String	Cause	Troubleshooting
191	191-A1 ERR	KC option	
192	192-A1 ERR	KC option	
193	193-CTRL ERR	Faulty controller.	Replace the controller.
194	194-CTRL ERR	Faulty controller.	Replace the controller.
195	195-BRK ERR	Controller detecting a short on A29 on start up. With the code in master, the short is at lowering coil. With the code in slave, the short is on the brake relay.	Check coil for short and check harness to lowering coil for short. Check brake relay for short.
196	196-TRAC PHASE	Short between wheel motor phase connections (U,V,W) or internal wheel motor.	Check for short on wheelmotor phases connections (U, V, W) at motor side/controller side. If short, replace wheel motor.
197	197-SOFTWARE VER	Mismatch between main and secondary software.	Check the software versions between main and secondary software. Flash it to the latest version. If error still persist replace the controller.
198	198-PARA MISM	Mismatch between main and secondary paramters	Restore and save the parameters list.
199	199-PARA TRANSF	Parameter change is saving, wait longer, otherwise cycle the power.	Confirm paramters and save properly. Adjust paramters as required.
200	200-CTRL ERR	Battery is out of range (too high)	Check the battery voltage, if it is out of range replace the battery.
201	201-M1 ERR	There is an error in the choice of the torque profile parameters.	Check the values of those parameters under HARDWARE SETTINGS and SLV HARDWARE SETTINGS lists.
202	202-BATT HI V	Battery is out of range (over 35 V)	Check the battery voltage, if it is out of range replace the battery. If no problem can be found, replace the controller.
203	203-GRADE NO CAL	Tilt calibration not performed.	Perform the internal tilt calibration.
206	206-CTRL ERR	206-CTRL ERR 81: Battery positive is short to motor phase U.	Check power cable connections for short. Check motor leakage test. If the motor connections are OK and no internal shorts found, then the problem is within the controller. Replace it.
		206-CTRL ERR 82: Battery positive is short to motor phase V.	
		206-CTRL ERR 83: Battery positive is short to motor phase W.	
207	207-CTRL ERR	207-CTRL ERR 01: Battery negative is short to motor phase U.	Check power cable connections for short. Check motor leakage test. If the motor connections are OK and no internal shorts found, then the problem is within the controller. Replace it.
		207-CTRL ERR 02: Battery negative is short to motor phase V.	
		207-CTRL ERR 03: Battery negative is short to motor phase W.	
208	208-CTRL ERR	Parameter setting is out of range.	Clear EEPROM. Flash the software. Replace the controller if error still persists.
209	209-PARA RESTORE	The controller has restored the default settings. If a CLEAR EEPROM has been made before the last key re-cycle, this warning informs you that EEPROM was correctly cleared.	If the alarm appears at key-on without any CLEAR EEPROM performed, replace the controller.
210	210-CTRL ERR	Something wrong with machine memory.	Try to switch the key off and then on again. If the alarm is still present replace the controller.

Code	Code String	Cause	Troubleshooting
211	211-STALL ROTOR	Traction motor is stuck or incorrect speed sensor signal.	Try to manually release the brake to see if motor rotates. Check speed sensor condition. Check motor wiring. Through the TESTER function, check if the sign of FREQUENCY and ENCODER are the same and if they are different from zero during a traction request.
212	212-M2 ERR	Faulty controller.	Check battery voltage. If no problem found, replace controller.
213	213-CONTCT ERR	Voltage is low at A27 or at wire 19 at contactor.	Check contactor voltage when turned ON. Check wire 19 on contactor.
214	M214-LOW COIL OPN	Open circuit between controller to lowering solenoid	Check lower solenoid, not connected or open circuit. Replace with different lower coil, if not working, check the harness continuity between A26 and A29 to lowering solenoid connector. If continuity is good, replace the controller.
214	S214-EVP LOW COIL OPN	Open circuit between controller to brake relay	Check continuity for open circuit between pin B22 of controller and pin 10 of the Emergency Lowering Board connection in harness. Check continuity between pin 7 of base e-stop connector to pin 9 of the emergency lowering PCB.
215	215-LO COIL SHRT	Short between controller to lowering solenoid. Short in lowering coil.	Check lower solenoid, not connected or short. Replace with different lower coil; if not working, check the harness continuity between A26 and A29 to lowering solenoid connector. If continuity is good, replace the controller.
215	215-EVP DRV SHRT	Short between controller to brake relay. Short in brake relay.	Check continuity for short between pin B22 of controller and pin 10 of the Emergency Lowering Board connection in harness.
216	216-BRK ERR	Open circuit between controller A28 to 2 Pin Connector (Wire 17R) on the right motor brake. Open circuit between controller A30 to 2 Pin Connector (Wire 17L) on the left motor brake.	*Right* - Check continuity between controller A28 and 2 pin brake connector (Wire 17R). *Left* - Check continuity between controller A30 and 2 pin brake connector (Wire 17L). If no continuity, replace the harness. If continuity is good, try to manually release the brake. If the brake does not release, replace the brake.
217	217-CB2 PWR	Low voltage/no voltage at Pin A13 at controller.	Check CB2 circuit breaker. Replace/reset breaker if bad. If good, check from CB2 circuit breaker to Pin A13 (wire 03C) at controller.
218	218-TRAC TMP OPN	Master: Temperature sensor is not connected on right motor.	Check for open circuit at motor 6 pin connector on right motor. Check continuity A32 and A21 at controller. If connection is good, replace the motor.
		Slave: Temperature sensor is not connected on left motor.	Check for open circuit at motor 6 pin connector on left motor. Check continuity A33 and A15 at controller. If connection is good, replace the motor.
219	219-2H-13 ERR	Low Voltage/ No Voltage at Pin A13 at controller.	Check CB2 circuit breaker. Replace/Reset breaker if bad. If good, check from CB2 circuit breaker to Pin A13 (wire 03C) at controller.
220	220-08C V LOW	Voltage from the key-on is very low.	Check battery connections and voltage. If battery voltage is ok, then replace the controller.
222	222-NO CONFIG	Machine type/region not selected. Controller not configured.	Controller needs to be set up. Machine type and Region need to be selected.

Code	Code String	Cause	Troubleshooting
223	223-CONTACT SHT	Contactor is shorted.	Check contactor function. Check the harness to the contactor. If contactor not working, replace the contactor.
224	224-CHK SLAVE	Error on Slave Side.	Check error on Secondary side.
225	225-DECK EXT+RET	Deck extension and retraction are commanded the same time.	Check wiring of the switches. If both Switches are closed remove both and repeat sequence activating only one Deck request.
226	226-JSTK OR	CAN message is out of range.	Replace the joystick.
227	227-CTRL ERR	Faulty controller.	Replace the controller.
229	229-CTRL ERR	Internal controller error.	Replace the controller.
230	230-CONTACT OPN	Contactor curcuit is open.	Check contactor connection and function. Check the harness to the contactor. If contactor not working, replace the contactor.
231	231-CTRL ERR	Internal controller error.	Replace the controller.
232	232-CTRL ERR	Internal controller error.	Replace the controller.
233	233-CTRL ERR	Controller internal error.	Cycle the power. If still present, replace the controller.
234	234-COIL SHRT	M8: Right steering solenoid short A24	Check connection on right steering solenoid for short (wire 23A). Check condition of harness.
		M10: Left steering solenoid short A1	Check connection on left steering solenoid for short (wire 24A). Check condition of harness.
		M4: Lift solenoid short A25	Check connection on lift solenoid for short (wire 14). Check condition of harness.
234	234-COIL SHRT	S10: Base E Stop Light	Check connection on base E-stop LED. Check condition of harness.
		M20: Beeper harness short A2	Check connection on beeper harness for short on lower control box. Check condition of harness.
		S40: Horn connection short B21	Check connection on horn for short in lower control box. Check condition of harness.
		S20: Flashing light connection short B20	Check connection on flashing light for short. Check condition of harness.
235	235-CTRL ERR	Faulty controller.	Replace the controller.
236	236-CTRL ERR	Faulty controller.	Replace the controller.
237	237-CTRL ERR	Controller internal error.	Cycle the power. If still present, replace the controller.
238	238-CTRL ERR	Faulty controller.	Replace the controller.
239	239-SW/HW MISM	Hardware and software mismatch	Check hardware and software version. If good, replace the controller.
240	240-CTRL ERR	The controller cannot operate an output due to a damaged component or controller.	Check the following circuits for open, short, or damaged components: lift, lower, steer, base e-stop light, flashing light, horn and brake relay.

Code	Code String	Cause	Troubleshooting
241	241-COIL SHRT	*Main:* • Lift solenoid short A25. • Right steer solenoid short A24. • Left steer solenoid short A1. • Beeper harness short A2.	*Main:* • Check connection on lift solenoid for short (wire 14). Check condition of harness. • Check connection on right steer solenoid for short (wire 23A). Check condition of harness. • Check connection on left steer solenoid for short (wire 24A). Check condition of harness. • Check connection on beeper harness for short on lower control box (wire 29). Check condition of harness.
		Secondary: • Brake relay short B17. • Power on LED short B18. • Flashing lights connection short B20. • Horn connection short B21.	*Secondary:* • Check connection on brake relay 30 ACR (wire 17B) located in the emeregncy lowering PCB board. Check condition of harness. • Check connection on base E-stop LED (wire 60). Check condition of harness. • Check connection on flashing light for short (wire 22) Check condition of harness. • Check connection on horn for short in lower control box (wire 49A). Check condition of harness.
242	242-COIL OPN	Open circuit with 234 CTRL ERR (Refer to 234 CTRL ERR subcodes)	Check for open circuit (234 CTRL error) If good, replace the controller.
244	244-CHK SLAVE	Warning to check slave node for errors.	Check secondary node for errors.
245	245-CTRL ERR	Incorrect motor installed.	Confirm motor part number.
246	246-CTRL ERR	Faulty controller.	Replace the controller.
248	248-CAN ERR	CAN ERR 03: Faulty joystick.	Replace the joystick.
		CAN ERR 04: Faulty joystick.	Replace the joystick.
		CAN ERR 20: Faulty joystick.	Replace the joystick.
248	248-CAN ERR	CAN ERR 21: Faulty joystick.	Replace the joystick.
248	248-CAN ERR	CAN ERR 22: Open CAN connection between joystick and base control box.	Check CAN connections from joystick to base control box.
		CAN ERR 23: Faulty joystick.	Replace the joystick.
248	248-CAN ERR	CAN ERR 24: Faulty joystick.	Replace the joystick.
249	249-CTRL ERR	Faulty controller.	Replace the controller.
250	250-CTRL ERR	Faulty controller (internal controller temperature sensor error).	Replace the controller.
251	251-CTRL ERR	Faulty controller (internal voltmeter is out of range).	Replace the controller.
253	253-TRAC SHORT	Short on phases U/V/W while driving.	Check connections at U/V/W. If good, replace controller. If not resolved, replace motor.
254	254-BRK SHORT-	Short on brake A28 or A30.	Check harness for short to ground. If good, replace the controller.

5.8-26 Set up a new Skycoded controller

When a new Skycoded controller is installed, you must set up the machine type, region, battery type, and calibration.

Button	Function
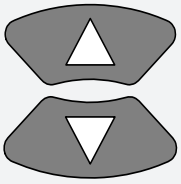	**UP and DOWN buttons** Select or scroll through menus.
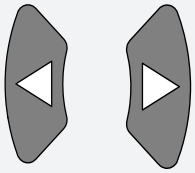	**LEFT and RIGHT buttons** Change settings and move through menus.
	**ENTER button** Select or save.

1. Park the MEWP on a firm level surface.

Unlock the controller

2. Pull out the base emergency stop button.
3. Turn the keyswitch to the base position.
4. Press ◎.
5. Enter the password 1275. Press ◎.

Machine setup:

6. Use the up and down arrows to scroll to **MACHINE SETUP**. Press ◎.
7. Use the left and right arrows to scroll to **MACHINE TYPE**. Press ◎.
8. Select the model of your MEWP.
9. Scroll to **REGION**. Press ◎.
10. Select the region of your MEWP. Note: the region is listed on the serial number plate of your MEWP.
11. Scroll to **BATT TYPE**. Press ◎.
12. Select the battery type installed in your MEWP. Refer to table *5.8-17 Machine setup menu table* for additional battery type details.
13. Scroll to **CALIBRATION**. Press ◎.
14. Scroll to **LOAD SENS CAL**. Press ◎.
15. Follow the flowcharts in *5.8-21 Load sense calibration - loaded menu* and *5.8-22 Load sense calibration - empty menu* to do the loaded and empty platform calibration procedures.
16. After the load calibration is complete scroll to **CAL. TILT SENSOR**. Press ◎.
17. Follow the flowchart in *5.8-23 Calibrate internal tilt sensor menu* to calibrate the tilt sensor.
18. After the tilt sensor calibration is complete scroll to **CAL. STEER SENSOR**. Press ◎.
19. Follow the flowchart in *5.8-24 Calibrate steer sensor menu* to calibrate the steer sensor.

Save changes:

20. After the steer calibration is complete scroll to **STORE DATA**. Press ◎.
21. **SAVE CHANGE?** Press ◎.
22. **SAVING PAR...**
23. **PARAM SAVED!**
24. Use the left arrow to return to the main menu.
25. Push and pull the base emergency stop button to cycle the power and save the changes.
26. The new controller setup is complete.

5.9 ZAPI controller

5.9-1 ZAPI controller pin chart

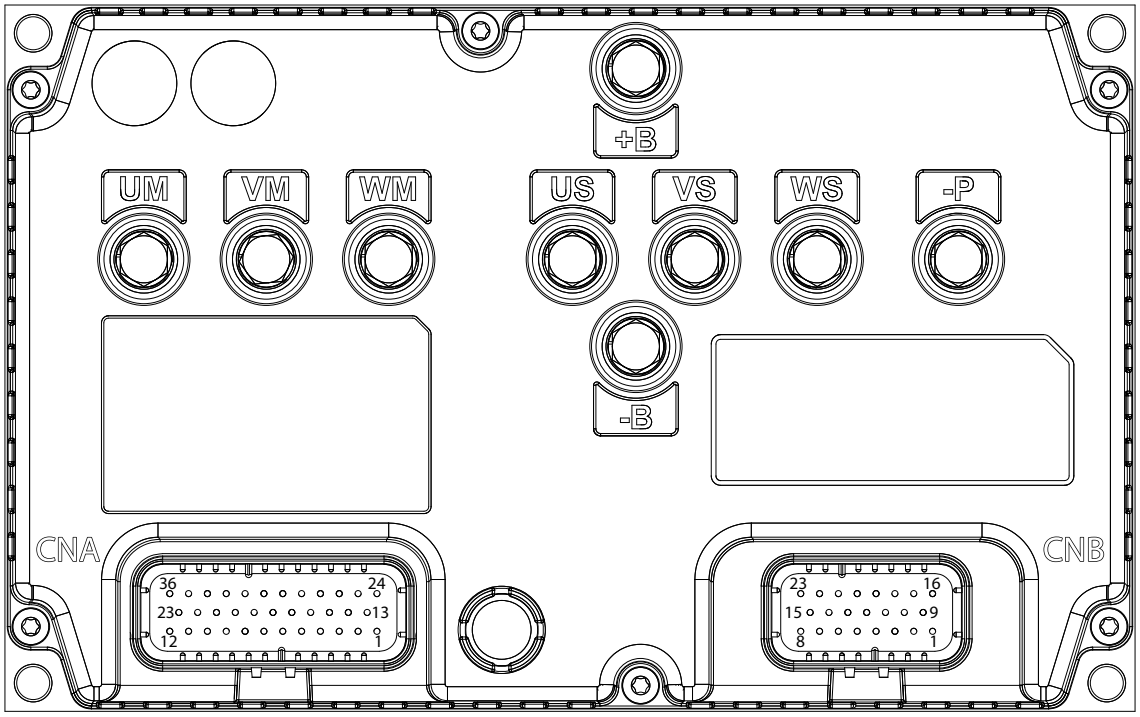

Connector A **Connector B**

Connector	Pin #	Wire # and Colour	Wire Function
B+		03B Black	Lug for 24V supply voltage (from C1 Motor Contactor via pump motor +)
B-		00 Black	Lug for 0V reference from Battery Negative
P-		(-P Black)	Lug for Output of Pulsed Negative (-) to initialize Pump Mptor
US		US Black	Lug for Phase U of Left Traction Motor
VS		VS Black	Lug for Phase V of Left Traction Motor
WS		WS Black	Lug for Phase W of Left Traction Motor
UM		UM Black	Lug for Phase U of Right Traction Motor
VM		VM Black	Lug for Phase V of Right Traction Motor
WM		WM Black	Lug for Phase W of Right Traction Motor

Connector	Pin #	Wire # and Colour	Wire Function
CM1 ZAPI Controller Plug A			
A	1	24 Blue/Black	0 V reference Output for Steer Left solenoid Valve 4H-24
A	2	29 Blue/Yellow	0 V reference Output (pulsed) for Beeper BP-29
A	3	08C Purple/White	24 V Input B+ from S10 Idle/PLTF/Base Key switch for Platform Signal
A	4	08L Purple/White	12 V Output supply for left motor speed sensor, tilt sensor
A	5	60A	0-5 V proportional input from PT1 pressure transducer analog output signal
A	6	Not used	
A	7	08 Purple/White	24 V Input B+ from Platform E-Stop for Platform signal
A	8	37 Green/White	24 V Input for Charger Cutout Interlock switch (ON when not charging)
A	9	CHA R Blue/White	Input from Channel A signal from Right Motor Speed Sensor
A	10	910 Purple/White	12 V output to EN1, LS1 and LS2 limit switches, PTI pressure transducer, beeper, and white noise relay
A	11	Not used	
A	12	71	12V Input from LS1 and LS2 pothole limit switches
A	13	03C Green/Purple	24V Input B+ Supply from C1 Motor Contactor closed thru CB2 Circuit Breaker (supply power for Solenoid coils)
A	14	Not used	
A	15	00L White	0V reference for Left Motor Speed Sensor, and Temperature Sensor
A	16	114 Yellow/Red	Input signal from steer sensor
A	17	CHA L Red	Input from Channel A signal from Left Motor Speed Sensor
A	18	CAN L Green	Communication CANBus Low
A	19	CHB L Black	Input from Channel B signal from Left Motor Speed Sensor
A	20	CHB R Blue	Input from Channel B signal from Right Motor Speed Sensor
A	21	00R White	0V reference for Right Motor Speed Sensor, and Temperature Sensor
A	22	Not used	
A	23	19D Orange/Black	Ground output from Telematics (option)
A	24	23A Black/White	0V reference Output for Steer Right solenoid Valve 4H-23A
A	25	14 Black	0V reference Output for Lift solenoid Valve 3H-14
A	26	00C	0V reference for Lower solenoid Valve 2H-13
A	27	19 Orange/Black	0V reference for C1 Motor Contactor
A	28	17R Blue/Red	0V reference for Right Motor BK1 Brake
A	29	13 Orange	24V Output for Lower solenoid Valve 2H-13
A	30	17L Blue/Red	0V reference for Left Motor BK1 Brake
A	31	CANH Yellow	Communication CANBus High
A	32	TMPR Black/White	Input signal from Right Motor Temperature Sensor
A	33	TMPL Black/White	Input signal from Left Motor Temperature Sensor
A	34	Not used	
JA	35	Not used	

Connector	Pin #	Wire # and Colour	Wire Function
CM1 ZAPI Controller Plug B			
B	1	Not used	
B	2	14A Black	24V Input from S2 Lift/Lower switch for RAISE signal
B	3	Not used	
B	4	128	12 V signal from TS1 tilt sensor
B	5	27	24V input from S11 Deck EXT/RET switch
B	6	13A Orange	24V Input from S2 Lift/Lower switch for LOWER signal
B	7	10 Blue/White	24V Input B+ from S10 Idle/PLTF/Base Key switch for Base Signal
B	8	26	24V input from S11 Deck EXT/RET switch
B	9	28	0-5 V signal from PS1 position sensor channel 2
B	10	28A	0-5 V signal from PS1 position sensor channel 1
B	11	17D Blue/Red	24V Input from S52 Brake Release Switch for Manually Releasing Brake signal (ON for Release)
B	12	07 Red	24V Input from S10 Idle/PLTF/Base Key switch for Platform signal
B	13	120	24V input from S17 indoor switch
B	14	Not used	
B	15	902	0 V reference from PS1 position sensor and TS1 tilt sensor and Pt1 pressure transducer
B	16	Not used	
B	17	17B	0V reference output for 30ACR relay
B	18	60 Black/Green	0V reference Output (pulsed) for PL-2 Power On LED of S28 Emergency Stop switch
B	19	03C Green/Purple	24V Input B+ Supply from C1 Motor Contactor closed thru CB2 Circuit Breaker (supply power for Solenoid coils)
B	20	22 Orange/Blue	0V reference Output (pulsed) for FL-1 Flashing Light(s)
B	21	49 Green	0V reference for H1 Horn
B	22	13C	0V reference output (pulsed) for proportional lower valve (CE only)
B	23	08B	5 V power supply to AT1 angle transducer

5.9-2 Flash the controller software

Connect the handheld device to the main harness

1. Download the updated software flies to a USB flash drive.
2. Turn the main disconnect switch to the off position.
3. Push the emergency stop button on the base control console.
4. Open the hydraulic tray.
5. Connect the 6-pin end of jumper **234289** to the handheld device.

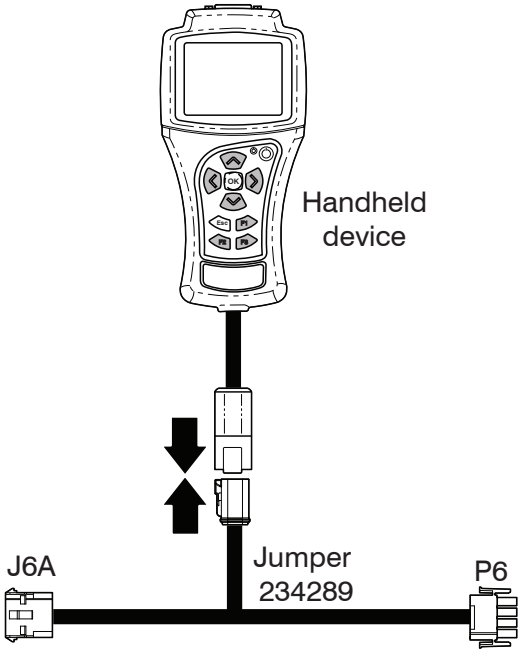

6. Locate the 6-pin connector P3 coming from the main harness near the base control console.
7. Connect the P6 end of the handheld device jumper to the P3 connector.

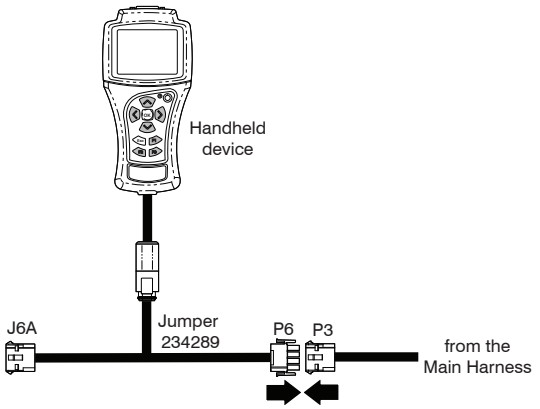

8. Turn the main power disconnect switch to the on position.
9. Pull the emergency stop button on the base control console.
10. Turn the key switch to the platform position.

Update the software

1. Insert the USB flash drive into the bottom of the handheld device.



2. Enter "1275" when prompted to enter the password on the INSERT PASSWORD screen. Press the UP or DOWN button to change the value of the number. Press the RIGHT or LEFT button to go to the next field. Press OK to enter the password.

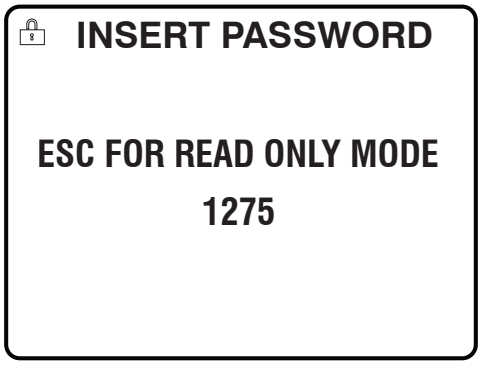

3. Select CONSOLE UTILITIES on the main menu and press OK.



4. Under the UTILITIES MENU, select INVERTER FIRMWARE UPDATE and press OK.

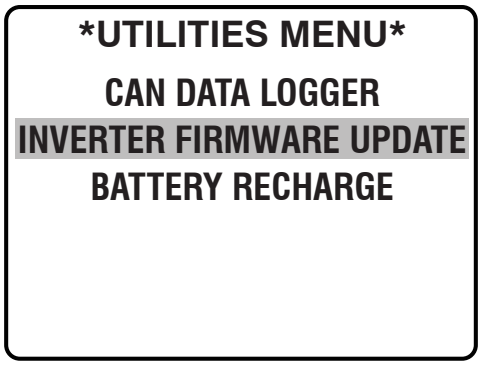

5. If a USB storage is already plugged in, wait for the next screen to appear.

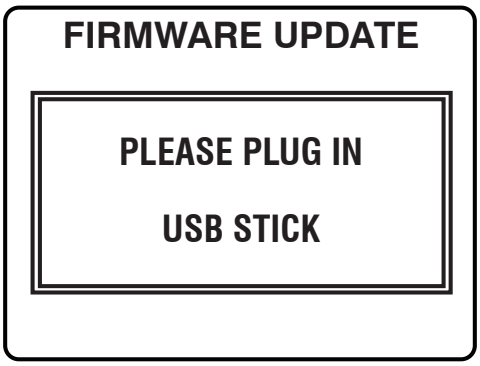

6. There will be two files in the USB with the z86 extension.
7. Select the Main file and press OK.
   - dem_afq_XXXXXXX.z86 - Main file

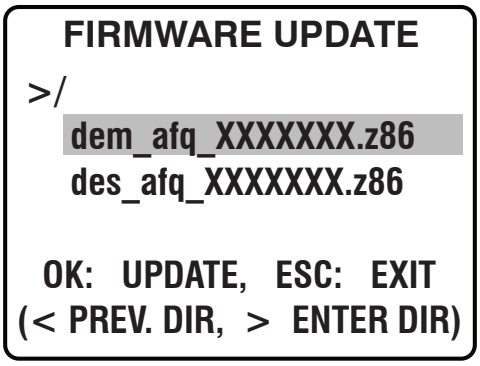

8. Make sure the CAN Baud rate is 250 Kps and BASE NODE is either 14 or 18 and press OK.

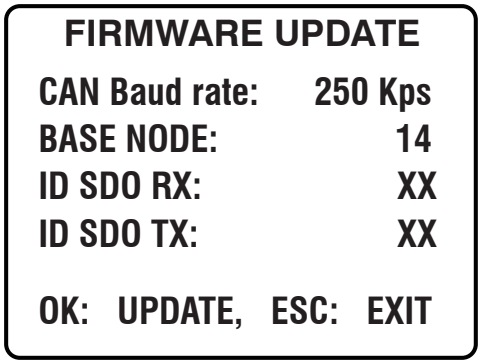

9. Wait until the upgrade is finished, then press ESC.
10. If the ESC key doesn't work, push and pull the emergency stop button on the base control console.

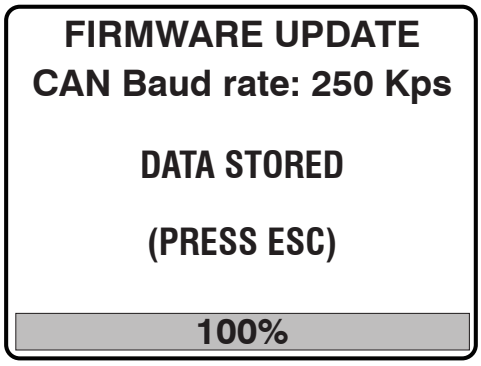

11. The handheld device goes back to the UTILITIES MENU.
12. Do steps 7 to 10 again but select the secondary z86 file.
    - des_afq_XXXXXXX.z86 - Secondary file

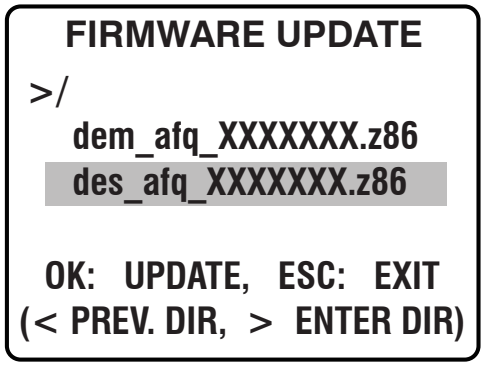

13. When the update is done, push and pull the base e-stop button to cycle the power to the MEWP and save the changes.
14. Push the emergency stop on the base control console.
15. Turn the main disconnect switch to the off position.
16. Disconnect the handheld device jumper from the main harness.

Notes

SKYJACK™

www.skyjack.com