SKYJACK

SERVICE MANUAL

SJ12 E, SJ16 E, SJ20 E

VERTICAL MAST LIFTS

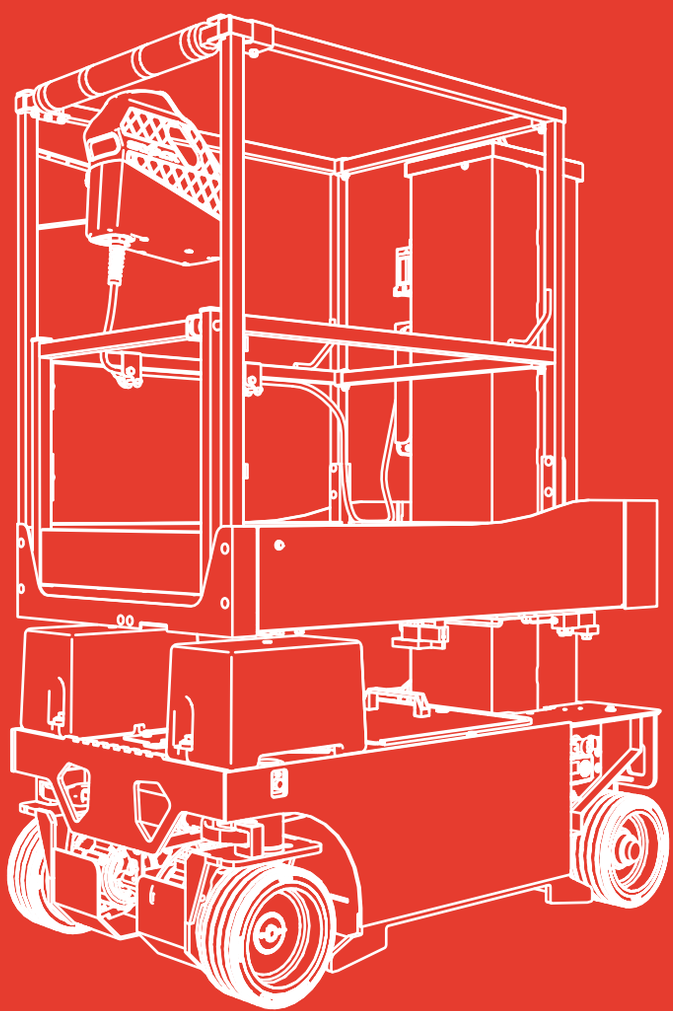

241914AFA
July 2 2026
ANSI/CSA, CE, AS

This manual is for MEWPs with serial numbers:

SJ12 E: A601 000 906 - A601 999 999
SJ16 E: A601 000 906 - A601 999 999
SJ20 E: A601 000 906 - A601 999 999

Please refer to the website (www.skyjack.com) for contact information, other serial numbers, the most recent technical manuals, animations, and USB software.

The original instructions are in English.

THIS SAFETY ALERT SYMBOL MEANS ATTENTION!



BECOME ALERT! YOUR SAFETY IS INVOLVED.

The Safety Alert Symbol identifies important safety messages on MEWPs, safety signs in manuals or elsewhere. When you see this symbol, be alert to the possibility of personal injury or death. Follow the instructions in the safety message.

⚠ DANGER

DANGER indicates an imminently hazardous situation which, if not avoided, will result in death or serious injury.

⚠ WARNING

WARNING indicates a potentially hazardous situation which, if not avoided, could result in death or serious injury.

⚠ CAUTION

CAUTION indicates a potentially hazardous situation which, if not avoided, may result in minor or moderate injury. It may also be used to alert against unsafe practices.

IMPORTANT

IMPORTANT indicates a procedure essential for safe operation and which, if not followed, may result in a malfunction or damage to the MEWP.

Notes

Table of Contents

Section 1 – Maintenance 11

1.1 Read and Heed 11

1.1-1 Mobile Elevating Work Platform (MEWP) definition 11

1.1-2 Purpose of equipment 11

1.1-3 Use of equipment 11

1.1-4 Service Policy and Warranty 11

1.1-5 Ownership of MEWP 11

1.1-6 Optional equipment 11

1.2 General information 12

1.2-1 Owner's annual inspection record 12

1.2-2 Replacement parts 12

1.2-3 Maintenance and service safety tips 12

1.2-4 Hydraulic system & component maintenance and repair 13

1.2-5 Hydraulic oil maintenance 13

1.2-6 Hydraulic maintenance tips 13

1.2-7 Railing maintenance and repair 14

1.2-8 Multi-conduction control cable repair 14

1.3 Scheduled maintenance and inspections 14

1.3-1 Service bulletins 14

1.3-2 Maintenance and inspections 14

1.3-3 Schedule and instructions 15

1.3-4 Repairs 15

1.3-5 Frequent/Periodic/Annual/Pre-Delivery Inspection Checklist 16

1.3-6 Inspection points 17

1.3-7 Function tests 22

Section 2 – Maintenance Tables and Diagrams 23

2.1 Standard Hose Numbering System 23

2.2 Torque Specifications for Fasteners (Metric) 25

2.3 Torque Specifications for Fasteners (US Imperial) 26

2.4 Torque Specifications for Hydraulic Couplings & Hoses 27

2.5 Torque specifications for cartridges and coils 27

2.6 MEWP Torque Specifications 28

2.7 MEWP Specifications - S/N A601 001 639 & above 29

2.8 MEWP Specifications - S/N A601 001 638 and below 30

2.9 Maximum platform capacities (evenly distributed) 31

2.10 Limit switch trip point 31

Section 3 – System Component Identification and Schematics 33
3.1 Electrical Symbol Chart 34
3.2 Hydraulic Symbol Chart 35
3.3 Wire Number and Colour Code 36
3.4 Hydraulic Parts List 37
3.5 Electrical Parts List 38
3.6 Hydraulic Connections 39
3.7 Platform Control Box Wiring 40
3.8 Platform Control Cable Wiring 41
3.9 Platform Control Box Wiring - SGLE 42
3.10 Platform Control Cable Wiring - SGLE 43
3.11 Beeper 44
3.12 Base Limit Switch 44
3.13 Platform Limit Switches 44
3.14 Mast Cable 45
3.15 Battery Monitoring System Harness 46
3.16 Wheel Motor Controller Connections 47
3.17 Battery wiring connections 48
3.18 Major Component Identification 49
3.19 Hydraulic Schematic 50
3.20 Base Control Wiring 51
3.21 Main Harness - ZAPI A 52
3.22 Main Harness Wiring - ZAPI A 53
3.23 Main Harness - ZAPI B 54
3.24 Elevate Telematics Harness 55
3.25 Electrical Schematic 57

Section 4 – Troubleshooting Information 59
4.1 Introduction 59
4.2 Electrical System 60
4.2-1 All Controls Inoperative 60
4.2-2 No Lift or Steer Functions 61
4.2-3 No Lift from Base or Platform 62
4.2-4 No Lower from Base or Platform 62
4.2-5 No Lift from Base Controls 62
4.2-6 No Lower from Base Controls 62
4.2-7 No Functions from Platform controls 63
4.2-8 No Lift/Lower from Platforms Controls 63
4.2-9 No Steer Left 63
4.2-10 No Steer Right 63
4.2-11 No Drive 64
4.3 Hydraulic System 65
4.3-1 All Hydraulic Controls Inoperative (No Lift or Steer functions) 65

4.3-2 No Lift Function . . . 65
4.3-3 No Lower Function . . . 65
4.3-4 No Steer Left and/or Right . . . 65

Section 5 – Procedures . . . 67

5.1 Safety and Workmanship . . . 67
5.1-1 Diagnostic Switch . . . 67

5.2 Platform . . . 68
5.2-1 Remove the Platform . . . 68
5.2-2 Replace the Load Cells . . . 70
5.2-3 Install the Platform . . . 72
5.2-4 Joystick 32-Pin Connector Chart . . . 75

5.3 Mast . . . 76
5.3-1 Lubricate the Mast . . . 76
5.3-2 Remove the Lift Cylinder . . . 77
5.3-3 Install the Lift Cylinder . . . 78
5.3-4 Remove the Mast and Lift Cylinder Together . . . 80
5.3-5 Install the Mast and Lift Cylinder Together . . . 82
5.3-6 Replace the Mast Wear Pads . . . 84

5.4 Power Unit . . . 98
5.4-1 System Pressure Adjustment . . . 98
5.4-2 Test the DC motor . . . 100

5.5 Tilt Switch . . . 102
5.5-1 Level the MEWP . . . 102
5.5-2 Replace the tilt switch . . . 103
5.5-4 Set Up a New Tilt Switch . . . 104
5.5-5 Reprogram an Existing Tilt Switch . . . 105
5.5-3 Tilt Switch Operation . . . 106

5.6 ZAPI Motor Controller . . . 107
5.6-1 ZAPI Controller Pin Chart . . . 107
5.6-2 Flash the controller software . . . 110

5.7 Skycoded display identification . . . 114
5.7-1 About the display . . . 114
5.7-2 Identification . . . 114

5.8 Skycoded display A . . . 115
5.8-1 Skycoded display A controls . . . 115
5.8-2 Main menu overview . . . 115
5.8-3 Language menu . . . 116
5.8-4 Machine type menu . . . 117
5.8-5 Region menu . . . 118
5.8-6 Battery type menu . . . 119
5.8-7 Console menu . . . 120
5.8-8 Access flowchart menu . . . 121

5.8-9 Password menu . . . 122
5.8-10 Calibration menu . . . 123
5.8-11 Tilt sensor calibration menu . . . 124
5.8-12 Load cell nominal weight calibration menu . . . 125
5.8-13 Load cell partial weight calibration menu . . . 126
5.8-14 Skycoded A error codes . . . 127
5.8-15 Skycoded A tester menu - master uC . . . 137
5.8-16 Skycoded A tester menu - slave uC . . . 142
5.8-17 Skycoded A tester menu - slave uC . . . 143
5.8-18 Skycoded A tester menu - slave uC . . . 144
5.8-19 Skycoded A tester menu - slave uC . . . 145
5.8-20 Set the access level . . . 146
5.8-21 Set the language . . . 146
5.8-22 Set the machine type . . . 146
5.8-23 Set the region . . . 147
5.8-24 Set the battery type . . . 147
5.8-25 Select the console . . . 147
5.8-26 Tilt sensor calibration . . . 148
5.8-27 Nominal weight calibration . . . 148
5.8-28 Partial weight calibration . . . 149
5.8-29 Check the platform load . . . 150
5.8-30 Test the load cells . . . 150
5.9 Skycoded display B . . . 151
5.9-1 Skycoded display B controls . . . 151
5.9-2 Main menu overview . . . 151
5.9-3 Main menu and language selection menu . . . 152
5.9-4 Machine info menu . . . 153
5.9-5 Tester main menu . . . 154
5.9-6 Tester main menu table A . . . 155
5.9-7 Tester main menu table B . . . 156
5.9-8 Tester main menu table C . . . 157
5.9-9 Tester sec menu . . . 158
5.9-10 Tester sec menu table A . . . 159
5.9-11 Tester sec menu table B . . . 160
5.9-12 Tester sec menu table C . . . 161
5.9-13 Parameter menu . . . 162
5.9-14 Parameter menu table . . . 163
5.9-15 Machine setup menu . . . 164
5.9-16 Machine setup menu table . . . 165
5.9-17 Logged alarms M/S menu . . . 166
5.9-18 Store data menu . . . 167
5.9-19 Calibration menu . . . 168
5.9-20 Load sense calibration - nominal weight menu . . . 169

5.9-21 Load sense calibration - partial calibration menu. 170
5.9-22 Calibrate internal tilt sensor menu 171
5.9-23 Skycoded B error codes and troubleshooting 172
5.9-24 Set up a new Skycoded B controller 181
5.10 Batteries 182
5.10-1 Battery maintenance 182
5.11 Battery Charger 182
5.11-1 Charger operation 182
5.11-2 Charger maintenance 182
5.11-3 Charger profiles 183
5.11-4 Charger connector 184
5.11-5 Charger troubleshooting 184
5.11-6 Charger fault codes 184
5.11-7 Charger error codes 185
5.12 Wheels 189
5.12-1 Remove the front wheel 189
5.12-2 Install the front wheel 189
5.12-3 Remove the rear wheel 190
5.12-4 Prepare the new rear wheel 191
5.12-5 Install the rear wheel 192
5.12-6 Do a test of the wheel motor temperature sensor 193
5.12-7 Do a test of the wheel motor 194

Notes

Section 1 – Maintenance

1.1 Read and Heed

Skyjack is continuously improving and expanding product features on its equipment; therefore, specifications and dimensions are subject to change without notice.

1.1-1 Mobile Elevating Work Platform (MEWP) definition

A MEWP is a mobile machine intended for moving persons, tools, and material to working positions. It consists of a work platform with controls, an extending structure, and a chassis.

1.1-2 Purpose of equipment

The Skyjack Vertical Mast lifts are designed to move personnel, tools, and materials to working positions.

1.1-3 Use of equipment

The MEWP is a highly maneuverable, mobile work station. Only elevate the platform, or drive while elevated on a firm, level surface.

1.1-4 Service Policy and Warranty

Skyjack warrants each new product to be free of defective parts and workmanship for the first 2 years or 3000 hours, whichever occurs first. Your local Skyjack dealer will replace or repair any defective part, with no charge for parts or labour. In addition, all products have a 5-year structural warranty. Contact the Skyjack service department for warranty statement extensions or exclusions.

1.1-5 Ownership of MEWP

Notify Skyjack of MEWP ownership. If you sell or transfer the ownership of a MEWP, promptly notify Skyjack of the new owner's contact information.

Skyjack needs this information to inform the owner of any updates or additional activities that are necessary to keep the machine in proper working condition.

1.1-6 Optional equipment

This MEWP accepts a variety of optional equipment. Refer to the operation manual for a list of the optional accessories. Operating instructions for these options are in the operation manual.

For components or systems that are not standard, speak to the Skyjack service department. Give the model and serial number for each applicable MEWP.

1.2 General information

1.2-1 Owner's annual inspection record

The owner is responsible for the maintenance inspections and repairs.Keep a record of the annual inspection on the label on the mast.

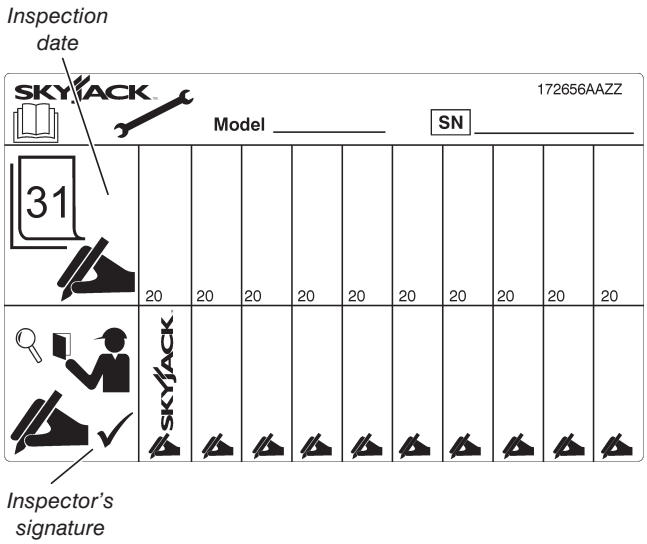

1.2-2 Replacement parts

Use only original replacement parts.Parts such as batteries, wheels, railings, etc. with weights and dimensions different from the original parts will affect the stability of the MEWP.They must not be used without the manufacturer's consent.

All replacement tires must be of the same size and load rating as the originally supplied tires to maintain the safety and stability of the MEWP.

⚠ WARNING

A unit that is damaged or not operating correctly must be immediately tagged and removed from service until repairs are completed.

1.2-3 Maintenance and service safety tips

1. Maintenance and repair should only be done by personnel who are trained and qualified to service this MEWP.
2. Do the maintenance and service procedures in a well-lit and well-ventilated area.
3. Anyone operating or servicing this MEWP must read and fully understand all operating instructions and safety hazards in both this manual and the operation manual.
4. Make sure all tools, supports, and lifting equipment are of the correct rated load and in good working condition.
5. Keep the work area clean and free of debris to avoid component contamination.
6. Make sure personnel are not below unsupported components or systems that are at risk of movement during maintenance.
7. All service personnel must be familiar with the employer and governmental regulations for servicing this type of equipment.
8. Keep sparks and flames away from flammable or combustible materials.
9. Correctly dispose of waste material such as lubricants, rags, and old parts in accordance with national, state/provincial/territorial, and local regulations.
10. Before you do any repair work, disconnect the main power connectors.

1.2-4 Hydraulic system & component maintenance and repair

⚠ WARNING

The fluid which escapes from a high-pressure hydraulic leak can damage your eyes, penetrate your skin, and cause serious injury.Wear the correct personal protective equipment at all times.

1. The hydraulic circuits include relief valves which limit pressure to safe operation values.They help to prevent the failure of hydraulic or structural components.
2. Make sure the hydraulic oil is completely clean.Even small amounts of dirt or unwanted materials in the system can damage components and cause unsatisfactory operation of the hydraulic system.
3. Drain and flush the entire system and replace the filter cartridges if you have any reason to believe there is contamination of the hydraulic system, or hydraulic system failure.
4. When you drain the hydraulic system, check the magnets in the hydraulic tank for metal particles. Metal particles can indicate imminent component failure. If metal particles are present, flush the entire system and change the hydraulic oil.
5. All containers and funnels used in handling the hydraulic oil must be completely clean. Use a funnel when necessary and fill the reservoir only through the filter opening. Do not use a cloth to strain the oil, as lint could get into the system.
6. When you remove a hydraulic component, cap and tag all of the hydraulic lines involved. Plug the ports of the removed components.
7. Disassemble hydraulic components in clean surroundings. Carefully identify the parts to make sure you reassemble them correctly. Clean all metal parts in a clean mineral oil solvent. Be sure to clean all internal passages fully. After the parts are dry, lay them on a clean, lint-free surface for inspection.
8. Replace all O-rings and seals when you overhaul a component. Lubricate all parts with clean hydraulic oil before you reassemble them. Use a small amount of petroleum jelly to hold O-rings in place during assembly.
9. Be sure to replace lost hydraulic oil after you install the repaired component.Bleed air from the system when required.
10. Keep all hydraulic connections tight. A loose connection in a pressure line allows the oil to leak or draw air into the system. Air in the system can damage components and cause noisy or erratic system operation.
11. Preventive maintenance is the easiest and least expensive type of maintenance.

1.2-5 Hydraulic oil maintenance

Draw samples of hydraulic oil from the reservior annually and test them.

- Take these samples when the oil is warmed through normal operation of the system.
- Have the sample analyzed by a qualified lubrication specialist to determine if it is suitable for continued use.

Oil change intervals depend on the care used to keep the oil clean, and the operating conditions.

- Oil must be changed more often when there is dirt or moisture contamination.
- Under normal use and operating conditions, you should change the hydraulic oil every two years.

1.2-6 Hydraulic maintenance tips

1. Change the filters annually.Dirty, dusty, and high-moisture environments can cause the hydraulic system to be contaminated more quickly.You may need to change the filters more often.
2. Keep a sufficient quantity of clean hydraulic oil of the correct type and viscosity in the hydraulic tank.
3. Keep all hydraulic connections tight.

1.2-7 Railing maintenance and repair

Skyjack MEWPs have been designed to ensure compliance with the relevant design standards applicable for that particular unit at the time of manufacture.As such, any repairs made to the guardrail or basket structure need to ensure this compliance is not compromised and must return the structure to its original condition.

Any damage must be repaired by returning the railing assembly to its undamaged state.Damage includes, but is not limited to, the items listed below:

- bent/deformed guardrail sections
- cracks or broken welds in railing sections
- damaged pin connections
- missing pins or broken pin lanyards
- missing railing hardware
- loose or missing parts
- additional holes in guardrail sections other than those approved by Skyjack

Additionally, the guardrails must be properly positioned and secured, and the entry gate must be in good working order.

The strength of the guardrail system, and therefore its ability to provide fall protection for platform occupants, depends upon the design being secure and undamaged.

Skyjack railings are designed for modular replacement, and Skyjack recommends replacement of any damaged railing section. Skyjack-approved replacement parts will meet this requirement.

1.2-8 Multi-conduction control cable repair

If damage occurs to the outer casing of a multi-conductor control cable, you may use heat shrink tubing to case and protect the control cable casing.

Before you install the heat shrink, make sure there is no damage to the individual wires contained in the control cable, or to their insulation.

The heat shrink tubing selected and used should seal the electrical circuit from water intrusion, be suitable for the machine operating temperature range, and be suitably flexible to allow the required bending radius of the cable in its application.

1.3 Scheduled maintenance and inspections

1.3-1 Service bulletins

Before performing any scheduled maintenance inspection procedure, refer to the service bulletins found on our website: *www.skyjack.com* for updates related to the service and maintenance of this MEWP.

1.3-2 Maintenance and inspections

Death or injury can result if the MEWP is not kept in good working order. Inspection and maintenance should be done by competent personnel who are trained and qualified on maintenance of this MEWP.

⚠ WARNING

Failure to perform each procedure as presented and scheduled may cause death, serious injury, or substantial damage.

NOTE

Preventive maintenance is the easiest and least expensive type of maintenance.

- Unless otherwise specified, do each maintenance procedure with the MEWP in the following configuration:
  - Park the MEWP on a flat and level surface
  - Disconnect the batteries by disconnecting the main power connectors.
- Repair damaged or malfunctioning components before operating the MEWP.
- Keep records of all inspections.

1.3-3 Schedule and instructions

The actual operating environment of the MEWP may affect the maintenance schedule.

The inspection points covered in the *1.3-5 Frequent/Periodic/Annual/Pre-Delivery Inspection Checklist* indicate the areas of the MEWP to be maintained or inspected, and at what intervals the maintenance and inspections are to be done.

Inspection schedule frequency:

PDI/Frequent/ Periodic	**B**	Do a PDI before each delivery, or a Frequent Inspection every 200 days or 200 hours.
Annual	**C**	Do a Scheduled Maintenance Inspection every year.
Additional	*****	Do this at time-sensitive maintenance intervals.

- Make copies of the maintenance and inspection checklist to be used for each inspection.
- Check the schedule on the checklist for the type of inspection to be done.
- Place a check mark in the appropriate box after each inspection procedure is done.
- Use the maintenance and inspection checklist and the step-by-step procedures in *1.3-6 Inspection points*.
- If an inspection receives a fail, tag and remove the MEWP from service.
- If a MEWP components has been repaired, do an inspection again before you remove the tag. Place a check mark in the repair column.

Legend

Pass	**P**
Not applicable	**N/A**

1.3-4 Repairs

When repairs are made to a MEWP, the service technician must complete the full pre-operation inspection and function tests before putting the MEWP into service.

IMPORTANT

Never use a malfunctioning MEWP.If malfunctions are discovered, tag the MEWP and remove it from service.

1.3-5 Frequent/Periodic/Annual/Pre-Delivery Inspection Checklist

SKYJACK™

Frequent/Periodic/Annual/PDI Checklist

Vertical Mast, Electric Scissors, and Rough Terrain Scissors

Serial Number: Starting with serial number A/B/C000 000 000 or 09 000 000 and above

Model:

Hourmeter Reading:

Product Owner:

Product User/Inspector:

Date/Time:

Inspection Type (choose one): ☐ Pre-delivery ☐ Frequent ☐ Periodic ☐ Annual

Use this table for pre-delivery inspections (PDI) before each rental, lease or sale and as an instruction for all frequent inspections and annual inspections. Refer to the operation and service manuals for inspection instructions (for example, visual inspection and function tests, torque specs, engine oil, chain inspection intervals, and more).

Inspection Type Schedule	
PDI/Frequent/Periodic	B
Annual	B+C

B - Do the pre-delivery inspection before the machine is sent out or during the frequent inspections at 200 days or 200 hour intervals. For more instructions, refer to the operation and service manuals.
C - Do the scheduled maintenance Inspections each year. For more instructions, refer to the operation and service manuals.

P - Pass
N/A - Not Applicable

IMPORTANT! Wash the MEWP thoroughly to remove dirt, debris, road salt, etc., as necessary due to operating conditions, as soon as possible after transportation, and before pre-delivery inspections.

Put a check mark on the "Pass" column as you meet the requirements of the inspection of each item. Add a comment if the item does not pass inspection.

Items for Inspection		P	N/A
Service Bulletins. Make sure there are no open service bulletins.	B		
Annual Inspection. Make sure you complete it within 13 months.	B		
Labels. In place, correctly attached and you can read them.	B		
Limit/Rotary Switches. Correctly installed and no obstructions or damage.	B		
BASE/ENGINE			
Engine and Components. Do a check on engine and components for any loose, missing, damaged, or failed items. Make sure you do not exceed the recommended fluid, oil and coolant change intervals.	B		
Engine and Components. Replace the engine oil and filter.	C		
Engine Intake Air Filter. No damage or missing component. Remove dirt and dust.	B		
Engine Intake Air Filter. Replace the air filter if necessary.	C		
Engine Oil. Oil level between "L" and "H". Make sure you do not exceed the oil change interval.	B		
Radiator. Correctly attached and no damage or missing components. Do a check of coolant level.	B		
Radiator. Do a check of the coolant level and condition and replace if necessary.	C		
Fuel Tank and Lines. Filler cap, tank, fittings and hoses are tightly closed and no damage or leaks.	B		
Propane Tank and Lines. Straps are correctly installed to brackets and couplers are tight. Make sure there are no damage or leaks.	B		
Outriggers. No damage or missing components.	B		
Pothole Protection. Both sides have no obstructions, dirt or damage.	B		
Battery/Hydraulic Tray. Trays are latched tightly and no missing components.	B		
Batteries. No damage, tight connections and sufficient fluid levels. Clean terminals and cable ends.	B		
Battery Charger. Correctly attached and no damage.	B		
Steer Assembly. Correctly attached and no damage leaks or missing components.	B		
Wheel/Tire Assembly. Do a check of all tires for damage, missing parts, wear and correctly aligned.	B		
Wheel/Tire Assembly. Wheel nuts/bolts are installed and are tight.	B		
Axles. Correctly attached and no missing components. Tight fittings and hoses and no leaks.	B		
Axles. Do a check and replace oil if necessary.	C		
Oscillating Cylinders. Correctly attached and no missing components. Tight fittings and hoses and no leaks.	B		
Oscillating Cylinders. Do a check of the mounting bolts' torque seal.	C		
Hydraulic Tank, Pump, Motor and Lines. Filler cap, hoses, and other hydraulic components are closed tightly and no damage or leaks.	B		
Hydraulic Oil. Level at, or slightly above top mark.	B		
Hydraulic Oil. Do a check and replace oil and filters if necessary.	C		
Electrical Components. Do a check on all electrical components such as the motor controller if necessary. Correctly attached and no damage. Tight wire connections and fasteners.	B		

Items for Inspection		P	N/A
Manifolds. Tight fittings and hoses and no damage or leaks. Tight wire connections, no missing components and correctly working valves.	B		
Main Power Disconnect Switch. Cables tight and in working order.	B		
Base Controls. Operate switches and make sure they all operate correctly. No damage or missing components.	B		
Brakes. Correctly attached and no damage or leaks.	B		
Brakes. Do a check on disc wear and replace if necessary.	C		
Base Weldment. No deformation or cracks.	B		
Grease Points. No obstructions, dirt, or damage. Add grease if necessary.	B		
Ladder. Correctly attached and no damage.	B		
Tilt Sensor. Correctly attached and no damage.	B		
LIFTING MECHANISM - MAST/SCISSORS			
Maintenance Support(s). Correctly attached and no damage.	B		
Scissor Assembly and Bumpers. Correctly attached, no deformation/damage. Cables and wires installed with no damage.	B		
Sliders and Rollers. Correctly attached and no obstructions, dirt, or damage/wear.	B		
Lift Cylinder(s). No damage or missing components. Tight fittings and hoses and no leaks. Correctly installed.	B		
Height Sensor. Correctly attached and no damage.	B		
Scissor Pins. Correctly attached and no damage.	B		
Mast Assembly. No damage, cracks or deformation.	B		
Mast Assembly. Lubricate the mast as recommended.	C		
Chains, Rollers and Control Cables. No damage or missing components.	B		
Wear Pads. No damage/wear or missing components. Fasteners tight.	B		
PLATFORM			
Railings and Gate. Correctly attached and no damage or missing components.	B		
Fall-Protection Anchorage. Attachment rings correctly attached and no damage.	B		
AC Power Socket. No obstructions, dirt, or damage.	B		
Platform Control Console. Operate the switches and make sure they all operate correctly. No damage or missing components.	B		
Manual Storage Box. Manuals and documents are in storage box, in good condition, and you can read them.	B		
Powered Extension Control Console. Operate switches and make sure they all operate correctly. No damage or missing components.	B		
Extension Platform. Correctly attached and no damage or missing components.	B		
Function Tests. Refer to the operation manual for your serial number for information on how to run these tests.			**PASS** / **FAIL**

199341AHA

Comments:

The undersigned has made sure that all areas in the list have received an inspection.
The undersigned has told the machine owner of all inconsistencies in the inspection and corrected them before machine operation.

Owner: Print Name _____ Signature _____ Date (DD/MM/YY) _____

User/Inspector: Print Name _____ Signature _____ Date (DD/MM/YY) _____

1.3-6 Inspection points

Refer to *1.3 Scheduled maintenance and inspections* for more information and the inspection schedule.

⚠ WARNING

Environmental hazard. Immediately remove gasoline, diesel fuel, engine oil, and hydraulic fluid spills and leaks with rags. Discard these rags in accordance with national, state/provincial/territorial, and local regulations. Spilled fluids can damage the environment. When spilled fluids go into the water (for example, a sewage system, streams, rivers, or other surface water), they can kill aquatic life.

Legend


Visual inspection


Action required


Filters


Fluids


Grease



Inspection frequency


Procedure available in Section 5


Return to the PDI form

Use the *1.3-5 Frequent/Periodic/Annual/Pre-Delivery Inspection Checklist* and do the inspections that follow:

Labels



- Refer to the operation manual.Make sure all labels are present and in the correct location, in good condition, and are legible. Ⓑ

Electrical components



- Do a check of all electrical components and harnesses for chafed, corroded, loose, or damaged wires and connectors.Make sure the connections are tight.
- Make sure all switches and buttons rotate or move to all positions, are in good condition, and return to the neutral position.Make sure the switches haven't been tampered with or disabled.
- Make sure the limit switches do not have broken or missing actuator arms. Ⓑ

Fluids and Filters



- Make sure all fittings and hoses are correctly tightened.
- Make sure the hydraulic tank cap is tightly closed.
- If the filter has a service indicator on it, replace the filter element if indicated.
- Look for hydraulic oil leaks.
- Do a check of the hydraulic oil level.Add more fluid if necessary.

All components



- Make sure there are no loose or missing parts.
- Make sure there is no visible damage, including cracks or deformities in welded parts.
- Make sure all hardware is present and the fasteners are tight.
- Make sure all pins are present and the fasteners are tight.
- Additional inspection items are listed on the following pages.

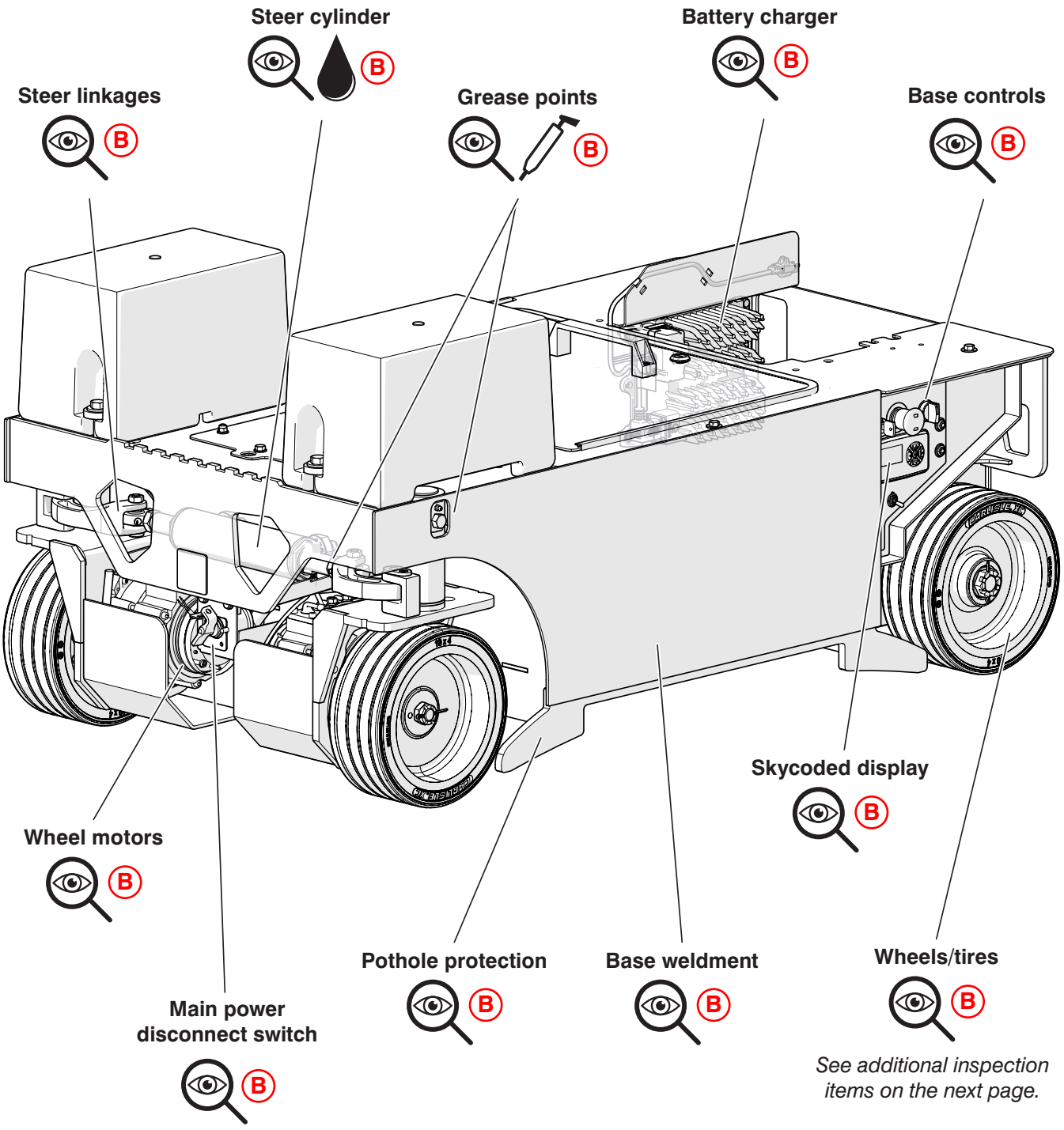

See additional inspection items on the next page.

⚠ WARNING

Do not use tires other than those that Skyjack specifies for this MEWP.Do not mix different sizes or types of tires, or use tires that are not in good condition. Only replace the tires with the same types that are approved by Skyjack. The use of other tires can make the MEWP less stable. If you do not obey, there is a risk of death or serious injury.

The tire treads have been removed from the illustration for clarity.

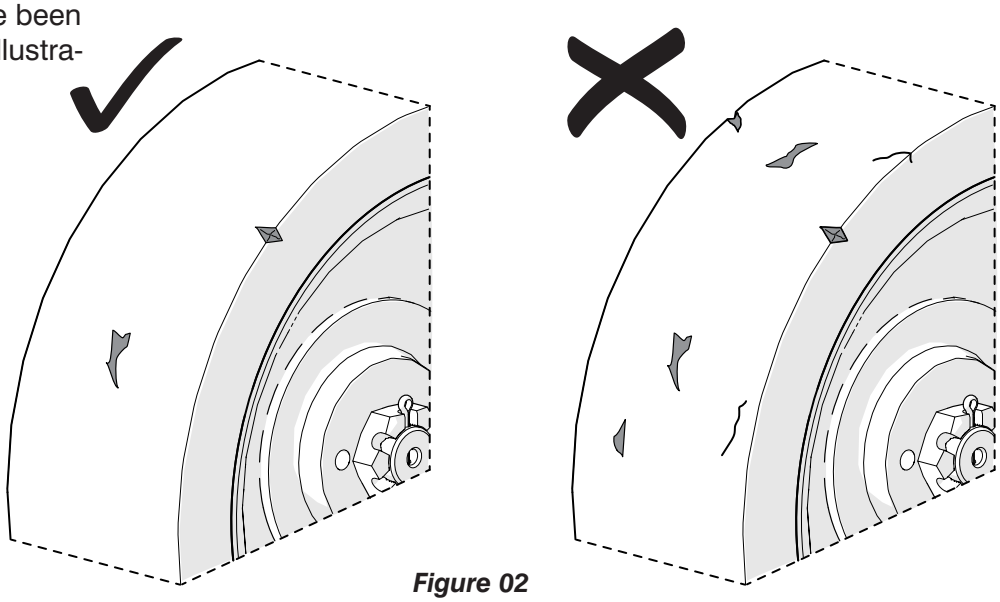

Figure 02

A small amount of wear is permitted.But if any of the wear or damage meets the criteria mentioned below, the tire should be replaced.

- **B - Frequent/periodic/pre-delivery inspection**

Do a check for damage or wear on each tire and rim.

- Look for damage or cracked welds on each rim. The rims should be round.
- Look for uneven or unusual wear on the tire.
- Look for flat spots on the tread face of the tire.
- The tire tread should be visible and not worn down completely.Refer to Figure 01.

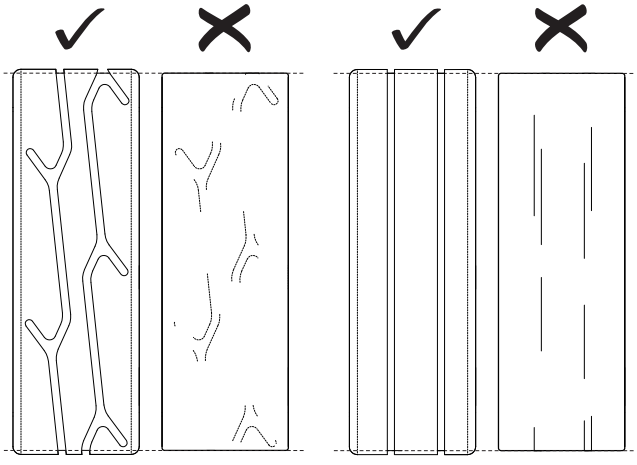

Figure 01

Do a check for cuts or missing chunks in the edges and tread face of the tire.Refer to Figure 012.

- The cut or missing chunk must not extend more than 10 mm (3/8”) towards the centre of the tire.
- Each cut or chunk should not be larger than 25 mm x 10 mm (1” x 3/8”), or deeper than 20 mm (3/4”).
- There should be no more than 2 cuts or chunks in each 1/4 section of the tire.There must be no more than 6 cuts or chunks in total in the tire.
- There should be no embedded debris.

Do a check of the wheel components and mounts.

- Make sure the wheels are correctly aligned vertically and horizontally.
- Make sure the **wheel motors** have no loose or missing parts and there is no visible damage.
- Make sure the **castle nuts** are in position and are tight.
- Make sure the **cotter pins** are correctly installed.
- If the cotter pin is not installed, refer to *2.6 MEWP Torque Specifications* for torque information.

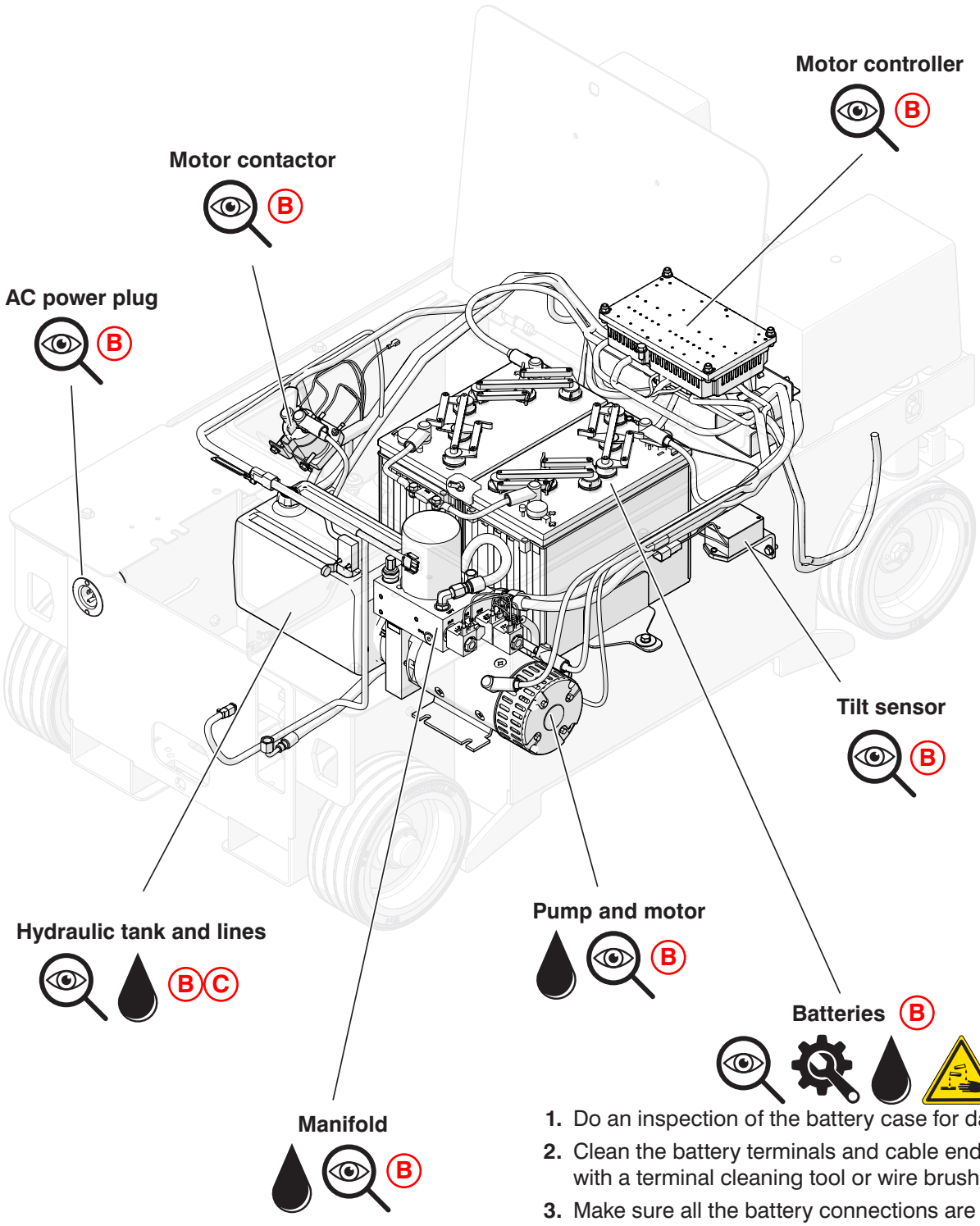

1. Do an inspection of the battery case for damage.
2. Clean the battery terminals and cable ends thoroughly with a terminal cleaning tool or wire brush.
3. Make sure all the battery connections are tight.
4. If applicable, check the battery fluid level.
   - If the plates do not have a minimum 13 mm (1/2 inch) of solution above them, add distilled or demineralized water.
   - Replace the battery if it is damaged or cannot hold a lasting charge.

Mast

- With the platform lowered, inspect the base of the mast to make sure there is no damage, cracks, or rust.

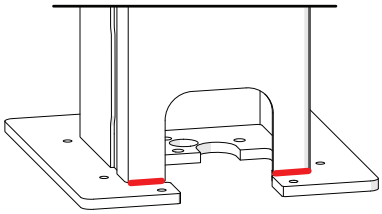

- Then, with the platform raised, inspect the rest of the base of the mast and make sure there is no damage, cracks, or rust.
- If there is no damage, cracks, or rust, continue with the full mast visual inspection.

Wear pads

Emergency lowering valve

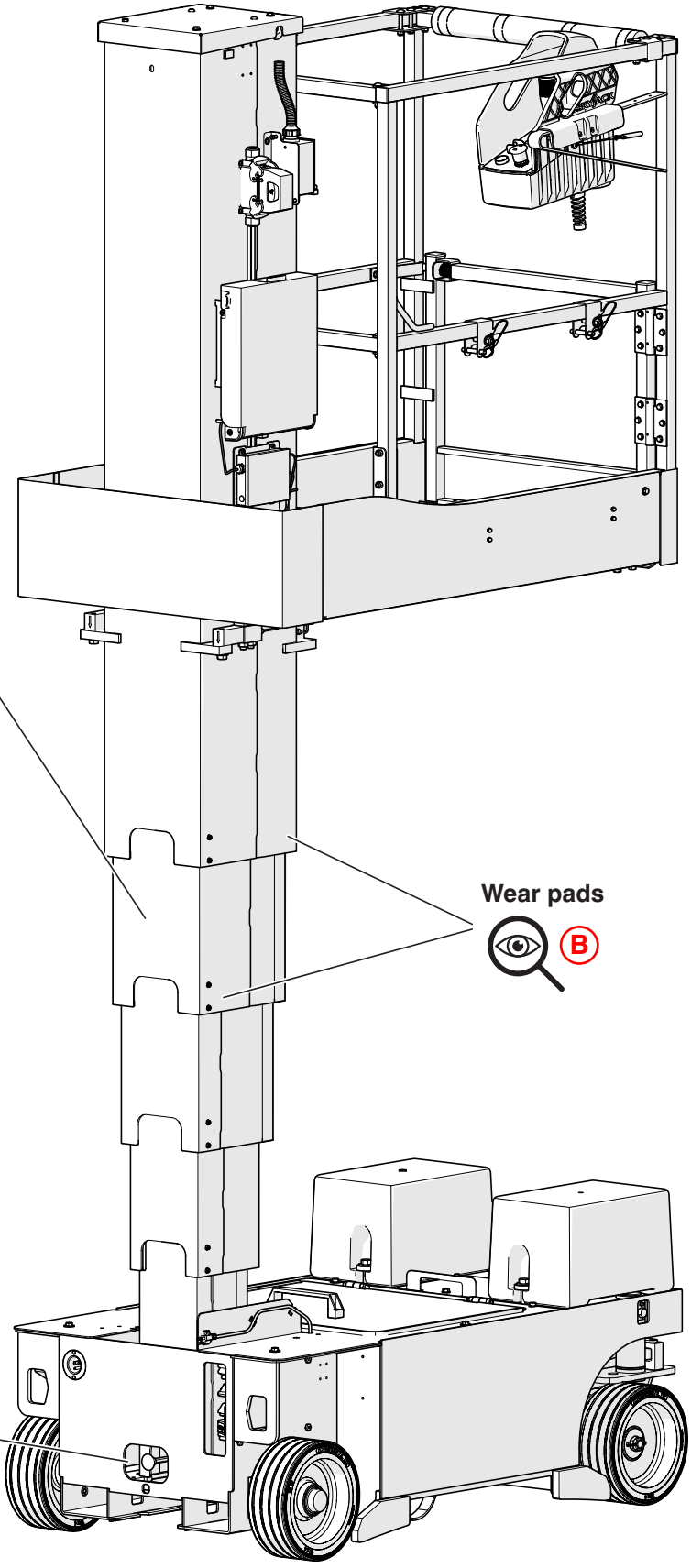

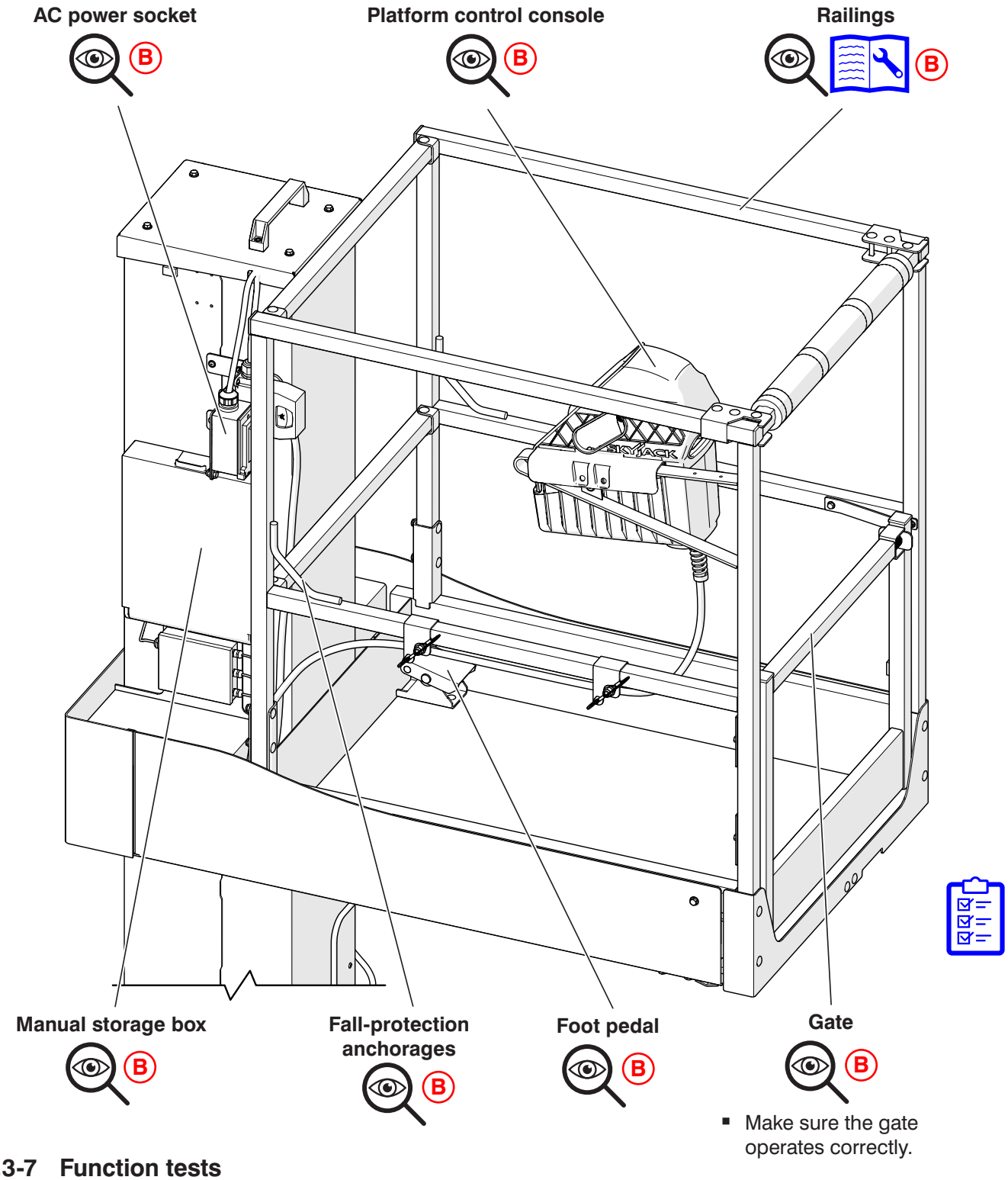

- Make sure the gate operates correctly.

1.3-7 Function tests

Do the function tests after you complete the inspections.

Refer to the *"Inspections before operation"* section of the operation manual for detailed instructions on how to do the function tests.

Section 2 – Maintenance Tables and Diagrams

Table 2.1 Standard Hose Numbering System

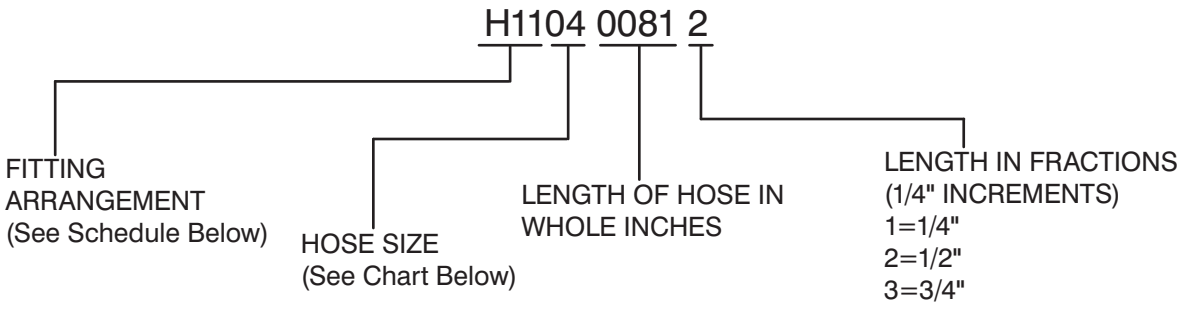

Using the number above as an example, H1104 0081 2, this hose requires a 37° JIC female swivel fitting on one end, and a medium length 90° JIC female swivel fitting for the other end. The hose must meet or exceed the S.A.E. 100R13 hose specification, and be a total of 81-1/2" long.

NOTE

Hose ends and hose must be from same manufacturer per S.A.E. J1273 Nov. '91, Sections 3.10 and 4.2. Hose ends and hose must be of the same size i.e. #4 size fittings must be used with #4 size hose.

Hose Size Chart														
Size	03	04	06	08	10	12	16	20	24	32	40	48	56	64
ID	3/16"	1/4"	3/8"	1/2"	5/8"	3/4"	1"	1-1/4"	1-1/2"	2"	2-1/2"	3"	3-1/2"	4"

Fitting Arrangement Schedule			
Hose Prefix	**Hose End Fitting**	**Hose End Fitting**	**S.A.E. Hose Specification**
H01	FEMALE, 37° JIC, SWIVEL	FEMALE, 37° JIC, SWIVEL	100R17
H02	FEMALE, 37° JIC, SWIVEL	FEMALE, 37° JIC, SWIVEL	100R13
H03	FEMALE, 37° JIC, SWIVEL	45°, FEMALE,37° JIC, SWIVEL	100R17
H04	FEMALE, 37° JIC, SWIVEL	45°, FEMALE,37° JIC, SWIVEL	100R13
H05	FEMALE, 37° JIC, SWIVEL	LONG 90°, FEMALE, 37° JIC, SWIVEL	100R17
H06	FEMALE, 37° JIC, SWIVEL	SHORT 90°, FEMALE, 37° JIC, SWIVEL	100R17
H07	LONG 90°, FEMALE, 37° JIC, SWIVEL	LONG 90°, FEMALE, 37° JIC, SWIVEL	100R17
H08	FEMALE, 37° JIC, SWIVEL	FEMALE, 37° JIC, SWIVEL	100R4
H09	FEMALE, 37° JIC, SWIVEL	45°, FEMALE,37° JIC, SWIVEL	100R4
H10	FEMALE, 37° JIC, SWIVEL	MALE PIPE THREAD FITTING	100R17
H11	FEMALE, 37° JIC, SWIVEL	MEDIUM 90°, FEMALE, 37° JIC, SWIVEL	100R13
H12	SHORT 90°, FEMALE, 37° JIC, SWIVEL	SHORT 90°, FEMALE, 37° JIC, SWIVEL	100R17
H13	FEMALE, 37° JIC, SWIVEL	REUSABLE MALE PIPE THREAD FITTING	300 PSI
H14	REUSABLE MALE PIPE THREAD FITTING	NO FITTING	300 PSI

Hose Prefix	Hose End Fitting	Hose End Fitting	S.A.E. Hose Specification
H15	REUSABLE FEMALE, 37° JIC, SWIVEL	REUSABLE FEMALE, 37° JIC, SWIVEL	300 PSI
H16	NO FITTING	NO FITTING	100R4
H17	NO FITTING	NO FITTING	300 PSI
H18	REUSABLE, FEMALE, 37° JIC, SWIVEL	NO FITTING	300 PSI
H19	LONG 90°, FEMALE, 37° JIC, SWIVEL	FEMALE, 37° JIC, SWIVEL	100R13
H20	FEMALE, SHORT 37° JIC, SWIVEL	SHORT 90°, FEMALE, 37° JIC, SWIVEL	100R4
H21	FEMALE, SHORT 37° JIC, SWIVEL	SHORT 90°, FEMALE, 37° JIC, SWIVEL	100R2AT
H22	FEMALE, 37° JIC, SWIVEL	FEMALE, 37° JIC, SWIVEL	100R2AT
H23	FEMALE, LONG 37° JIC, SWIVEL	LONG 90°, FEMALE, 37° JIC, SWIVEL	100R2AT
H24	FEMALE, SHORT 37° JIC, SWIVEL	SHORT 90°, FEMALE, 37° JIC, SWIVEL	100R13
H25	FEMALE, 37° JIC, SWIVEL	FEMALE, 37° JIC, SWIVEL	100R4
H30	MEDIUM 90°, FEMALE, 37° JIC, SWIVEL	FEMALE, 37° JIC, SWIVEL	100R17
H31	FEMALE, 37° JIC, SWIVEL	FEMALE, 37° JIC, SWIVEL	100R17
H32	SHORT 45°, FEMALE, 37° JIC, SWIVEL	FEMALE, 37° JIC, SWIVEL	100R17
H33	MEDIUM 45°, FEMALE, 37° JIC, SWIVEL	FEMALE, 37° JIC, SWIVEL	100R17
H34	SHORT 90°, FEMALE, 37° JIC, SWIVEL	FEMALE, 37° JIC, SWIVEL	100R17
H35	MEDIUM 90°, FEMALE, 37° JIC, SWIVEL	FEMALE, 37° JIC, SWIVEL	100R17
H36	LONG 90°, FEMALE, 37° JIC, SWIVEL	FEMALE, 37° JIC, SWIVEL	100R17
H37	SHORT 45°, FEMALE, 37° JIC, SWIVEL	FEMALE, 37° JIC, SWIVEL	100R4
H38	SHORT 90°, FEMALE, 37° JIC, SWIVEL	FEMALE, 37° JIC, SWIVEL	100R4
H39	LONG 90°, FEMALE, 37° JIC, SWIVEL	FEMALE, 37° JIC, SWIVEL	100R4
H40	SHORT 90°, FEMALE, 37° JIC, SWIVEL	FEMALE, 37° JIC, SWIVEL	100R16
H43	FEMALE, 37° JIC, SWIVEL	FEMALE, 37° JIC, SWIVEL	100R16
H51	FEMALE, 37° JIC, SWIVEL	FEMALE, 37° JIC, SWIVEL	100R17
H52	SHORT 45°, FEMALE, 37° JIC, SWIVEL	FEMALE, 37° JIC, SWIVEL	100R17
H53	MEDIUM 45°, FEMALE, 37° JIC, SWIVEL	FEMALE, 37° JIC, SWIVEL	100R17
H54	SHORT 90°, FEMALE, 37° JIC, SWIVEL	FEMALE, 37° JIC, SWIVEL	100R17
H55	MEDIUM 90°, FEMALE, 37° JIC, SWIVEL	FEMALE, 37° JIC, SWIVEL	100R17
H56	LONG 90°, FEMALE, 37° JIC, SWIVEL	FEMALE, 37° JIC, SWIVEL	100R17
H57	SHORT 45°, FEMALE, SAE ORFS, SWIVEL	FEMALE, SAE ORFS, SWIVEL	100R13
H58	FEMALE, SAE ORFS, SWIVEL	FEMALE, SAE ORFS, SWIVEL	100R13
H59	MEDIUM 90°, FEMALE, SAE ORFS, SWIVEL	FEMALE, SAE ORFS, SWIVEL	100R13
H60	FEMALE, 37° JIC, SWIVEL	FEMALE, 37° JIC, SWIVEL	100R17
H61	FEMALE, 37° JIC, SWIVEL	FEMALE, 37° JIC, SWIVEL	100R16
H62	SHORT 90°, FEMALE, 37° JIC, SWIVEL	FEMALE, 37° JIC, SWIVEL	100R16
H63	MEDIUM 90°, FEMALE, 37° JIC, SWIVEL	FEMALE, 37° JIC, SWIVEL	100R16
H64	LONG 90°, FEMALE, 37° JIC, SWIVEL	FEMALE, 37° JIC, SWIVEL	100R16
H65	MEDIUM 67°, FEMALE, 37° JIC, SWIVEL	FEMALE, 37° JIC, SWIVEL	100R12
H66	FEMALE, 37° JIC, SWIVEL	NO FITTING	100R4
H67	FEMALE, 37° JIC, SWIVEL	FEMALE, 37° JIC, SWIVEL	100R19
H68	SHORT 45°, FEMALE, 37° JIC, SWIVEL	FEMALE, 37° JIC, SWIVEL	100R19
H69	MEDIUM 90°, FEMALE, 37° JIC, SWIVEL	FEMALE, 37° JIC, SWIVEL	100R19
H70	LONG 90°, FEMALE, 37° JIC, SWIVEL	FEMALE, 37° JIC, SWIVEL	100R19
H71	LONG 90°, FEMALE, SAE ORFS, SWIVEL	FEMALE, SAE ORFS, SWIVEL	100R15

Table 2.2 Torque Specifications for Fasteners (Metric)

Size	Torque Type	SAE2		SAE 5	
		Dry	Lubed	Dry	Lubed
M5 x 0.80	(in-lb)	(54)	(41)	(78)	(59)
	Nm	6.1	4.6	8.8	6.7
M6 x 1.00	(in-lb)	(92)	(69)	(133)	(99)
	Nm	10.4	7.8	15	11.2
M7 x 1.00	(in-lb)	(156)	(116)	(222)	(167)
	Nm	17.6	13.1	25.1	18.9
M8 x 1.25	(in-lb)	(225)	(169)	(333)	(242)
	Nm	25.4	19.1	37.6	27.3
M10 x 1.50	ft-lb	37	28	53	40
	Nm	50	38	72	54
M12 x 1.75	ft-lb	65	49	93	69
	Nm	88	66	126	94
M14 x 2.00	ft-lb	104	78	148	111
	Nm	141	106	201	150
M16 x 2.00	ft-lb	161	121	230	172
	Nm	218	164	312	233
M18 x 2.50	ft-lb	222	167	318	238
	Nm	301	226	431	323
M20 x 2.50	ft-lb	314	235	449	337
	Nm	426	319	609	457
M22 x 2.50	ft-lb	428	321	613	460
	Nm	580	435	831	624
M24 x 3.00	ft-lb	543	407	776	582
	Nm	736	552	1052	789
M27 x 3.00	ft-lb	796	597	1139	854
	Nm	1079	809	1544	1158
M30 x 3.50	ft-lb	1079	809	1543	1158
	Nm	1463	1097	2092	1570
M33 x 3.50	ft-lb	1468	1101	2101	1576
	Nm	1990	1493	2849	2137
M36 x 4.00	ft-lb	1886	1415	2699	2024
	Nm	2557	1918	3659	2744

Inch-Pound Force = in-lb Foot-Pound Force = ft-lb Newton-Meter = Nm 1613

NOTE: *Lubed includes lubricants such as lubrizing, oil, grease, or uncured Loctite.*

Table 2.3 Torque Specifications for Fasteners (US Imperial)

Size	Torque Type	SAE2		SAE 5		SAE 8	
		Dry	Lubed	Dry	Lubed	Dry	Lubed
4-40	(in-lb)	(5)	(4)	(8)	(6)	(12)	(9)
	Nm	0.6	0.5	0.9	0.7	1.4	1.0
4-48	(in-lb)	(6)	(5)	(9)	(7)	(13)	(10)
	Nm	0.7	0.6	1.0	0.8	1.5	1.1
6-32	(in-lb)	(10)	(8)	(16)	(12)	(23)	(17)
	Nm	1.1	0.9	1.8	1.4	2.6	1.9
6-40	(in-lb)	(12)	(9)	(18)	(13)	(25)	(19)
	Nm	1.4	1.0	2.0	1.5	2.8	2.1
8-32	(in-lb)	(19)	(14)	(30)	(22)	(41)	(31)
	Nm	2.1	1.6	3.4	2.5	4.6	3.5
8-36	(in-lb)	(20)	(15)	(31)	(23)	(43)	(32)
	Nm	2.3	1.7	3.5	2.6	4.9	3.6
10-24	(in-lb)	(27)	(21)	(43)	(32)	(60)	(45)
	Nm	3.1	2.4	4.9	3.6	6.8	5.1
10-32	(in-lb)	(31)	(23)	(49)	(36)	(68)	(51)
	Nm	3.5	2.6	5.5	4.1	7.7	5.8
1/4-20	(in-lb) ft-lb	(66)	(50)	8	(75)	12	9
	Nm	7.5	5.6	11	8.5	16	12
1/4-28	(in-lb) ft-lb	(76)	(56)	10	(86)	14	10
	Nm	8.6	6.3	14	9.7	19	14
5/16-18	ft-lb	11	8	17	13	25	18
	Nm	15	11	23	18	34	24
5/16-24	ft-lb	12	9	19	14	25	20
	Nm	16	12	26	19	34	27
3/8-16	ft-lb	20	15	30	23	45	35
	Nm	27	20	41	31	61	47
3/8-24	ft-lb	23	17	35	25	50	35
	Nm	31	23	47	34	68	47
7/16-14	ft-lb	32	24	50	35	70	55
	Nm	43	33	68	47	95	75
7/16-20	ft-lb	36	27	55	40	80	60
	Nm	49	37	75	54	108	81
1/2-13	ft-lb	50	35	75	55	110	80
	Nm	68	47	102	75	149	108
1/2-20	ft-lb	55	40	90	65	120	90
	Nm	75	54	122	88	163	122
9/16-12	ft-lb	70	55	110	80	150	110
	Nm	95	75	149	108	203	149
9/16-18	ft-lb	80	60	120	90	170	130
	Nm	108	81	163	122	230	176
5/8-11	ft-lb	100	75	150	110	220	170
	Nm	136	102	203	149	298	230
5/8-18	ft-lb	110	85	180	130	240	180
	Nm	149	115	244	176	325	244
3/4-10	ft-lb	175	130	260	200	380	280
	Nm	237	176	353	271	515	380
3/4-16	ft-lb	200	150	300	220	420	320
	Nm	271	203	407	298	569	434
7/8-9	ft-lb	170	125	430	320	600	460
	Nm	230	169	583	434	813	624
7/8-14	ft-lb	180	140	470	360	660	500
	Nm	244	190	637	488	895	678
1-8	ft-lb	250	190	640	480	900	680
	Nm	339	258	868	651	1220	922
1-12	ft-lb	270	210	710	530	1000	740
	Nm	366	285	963	719	1356	1003
1-14	ft-lb	280	210	730	540	1020	760
	Nm	380	285	990	732	1383	1030
1 1/8-7	ft-lb	350	270	800	600	1280	960
	Nm	475	366	1085	813	1735	1302
1 1/8-12	ft-lb	400	300	880	660	1440	1080
	Nm	542	407	1193	895	1952	1464
1 1/4-7	ft-lb	500	380	1120	840	1820	1360
	Nm	678	515	1519	1139	2468	1844
1 1/4-12	ft-lb	550	420	1240	920	2000	1500
	Nm	746	569	1681	1247	2712	2034
1 3/8-6	ft-lb	670	490	1460	1100	2380	1780
	Nm	908	664	1979	1491	3227	2413
1 3/8-12	ft-lb	750	560	1680	1260	2720	2040
	Nm	1017	759	2278	1708	3688	2766
1 1/2-6	ft-lb	870	650	1940	1460	3160	2360
	Nm	1180	881	2630	1979	4284	3200
1 1/2-12	ft-lb	980	730	2200	1640	3560	2660
	Nm	1329	990	2983	2224	4827	3606

1612

** Inch-Pound Force = in-lb Foot-Pound Force = ft-lb*
Newton-Meter = Nm

NOTE

Lubed includes lubricants such as lubrizing oil, grease or uncured loctite.

Table 2.4 Torque Specifications for Hydraulic Couplings & Hoses

Hydraulic Coupling Torque Chart
O-Ring Port Connectors

SAE Size	Steel Ports		Non-ferrous Ports	
	ft-lb	Nm	ft-lb	Nm
4	14-16	20-22	9-10	12-13
6	24-26	33-35	15-16	20-21
8	50-60	68-78	30-36	41-47
10	72-80	98-110	43-48	60-66
12	125-135	170-183	75-81	102-110
16	200-220	270-300	120-132	162-180
20	210-280	285-380	126-168	171-228
24	270-360	370-490	162-216	222-294
32	-	-	-	-

Hose End Torque Chart
for JIC

Size		Steel				Brass			
Dash	Frac.	ft-lb		Nm		ft-lb		Nm	
		Min.	Max.	Min.	Max.	Min.	Max.	Min.	Max.
-4	1/4"	10	11	13	15	5	6	6.75	9
-6	3/8"	17	19	23	26	12	15	17	20
-8	1/2"	34	38	47	52	20	24	27.66	33
-10	5/8"	50	56	69	76	34	40	46.33	55
-12	3/4"	70	78	96	106	53	60	72.33	82
-16	1"	94	104	127	141	74	82	100.5	111
-20	1 1/4"	124	138	169	188	75	83	101.5	113
-24	1 1/2	156	173	212	235	79	87	107	118
-32	2"	219	243	296	329	158	175	214	237

Hose End Torque Chart
for Flat-Face O-Ring Seal (Steel)

Size		Torque Specification			
Dash	Frac.	ft-lb		Nm	
		Min.	Max.	Min.	Max.
-4	1/4"	10	12	14	16
-6	3/8"	18	20	24	27
-8	1/2"	32	40	43	54
-10	5/8"	46	56	60	75
-12	3/4"	65	80	90	110
-14	1"	65	80	90	110
-16	1 1/4"	92	105	125	240
-20	1 1/2	125	140	170	190
-24	2"	150	180	200	245

1614

Table 2.5 Torque specifications for cartridges and coils

	Cartridges						Coils
Valve Size	**8**	**38**	**58**	**10**	**12**	**16**	**All coil sizes**
Torque (ft-lb) max	20	20	20	25	35	50	4 to 5
Torque (in-lb) max	240	240	240	300	420	600	48 to 60
Torque (Nm) max	27	27	27	34	47	68	5 to 6.5

Additional torque specifications may be found in Section 5. *2301AA*

Table 2.6 MEWP Torque Specifications

Location	Description	Torque (ft-lb)	Torque (Nm)
Base			
Rear Axle Mounting Bolts	BOLT, Hex head (3/8"-16 x 1-1/2" Grade 5)	23	31
Counterweight Mounting Bolts	BOLT, Hex head (1/2"-13 x 2-3/4" Grade 5)	50	68
Steer Cylinder Hose Ftg Jam Nut	NUT, Hex head jam (1"-14 Gr. 5)	180	244
Mast			
Emergency Lowering Coil Washer	N/A	4.5	6
Emergency Lowering Valve	N/A	21	28
Mast to Base Mounting Bolts	BOLT, Hex head (3/8"-16 x 1" Grade 8)	35	47
Lift Cylinder Mounting Bolts	BOLT, Hex head (3/8"-16 x 1-1/4" Grade 8)	23	31
Lift Cylinder Top Mounting Bolts	BOLT, Socket head cap screw (1/4"-20 x 1-3/4" Grade 5 ZP)	75 in-lb	8.5
Load Cell Mounting Bolts	BOLT, Hex head (1/2"-13 x 2-1/4" Grade 8)	90	122
	BOLT, Hex head (1/2"-13 x 3-1/4" Grade 8)	90	122

2191AD

Table 2.7 MEWP Specifications - S/N A601 001 639 & above

Model		SJ12 E		SJ16 E		SJ20 E	
Weight *		913 kg	2012 lb	931 kg	2054 lb	1107 kg	2440 lb
Overall width		0.77 m	30.5 in	0.77 m	30.5 in	0.80 m	31.5 in
Overall length		1.37 m	54 in	1.37 m	54 in	1.37 m	54 in
Platform size (Inside)		0.69 m x 0.91 m	27.13 in x 35.66 in	0.69 m x 0.91 m	27.13 in x 35.66 in	0.69 m x 0.91 m	27.13 in x 35.66 in
Platform traversing		0.41 m	16 in	0.41 m	16.00 in	0.41 m	16 in
Height							
Working height		5.48 m	18 ft	6.55 m	21 ft 6 in	7.77 m	25 ft 6 in
Raised platform height		3.66 m	12 ft	4.72 m	15 ft 6 in	5.94 m	19 ft 6 in
Stowed height (railings up)		1.88 m	74 in	1.88 m	74 in	2.01 m	79.19 in
Drive height		Full		Full		Full	
Stowed platform height		0.75 m	29.7 in	0.75 m	29.7 in	0.75 m	29.7 in
Standard operating times							
Lift time (rated load)		15 s		21 s		26 s	
Lower time (rated load)		16 s		22 s		26 s	
Chassis							
Stowed drive speed	Forward	3.5 km/h 10 m/10 sec	2.2 mph 20 ft/6 sec	3.5 km/h 10 m/10 sec	2.2 mph 20 ft/6 sec	3.0 km/h 10 m/12 sec	1.9 mph 20 ft/7 sec
	Reverse	3.5 km/h 10 m/10 sec	2.2 mph 20 ft/6 sec	3.5 km/h 10 m/10 sec	2.2 mph 20 ft/6 sec	2.6 km/h 10 m/14 sec	1.6 mph 20 ft/9 sec
Elevated drive speed		0.5 km/h 5 m/36 sec	0.3 mph 10 ft/23 sec	0.5 km/h 5 m/36 sec	0.3 mph 10 ft/23 sec	0.5 km/h 5 m/36 sec	0.3 mph 10 ft/23 sec
Gradeability		25%		25%		25%	
Tires (solid rubber)		10 in x 4 in		10 in x 4 in		10 in x 4 in	
Hydraulic oil							
Type		ATF Dexron III		ATF Dexron III		ATF Dexron III	
Tank capacity		5.3 L	1.41 gal	5.3 L	1.41 gal	5.3 L	1.41 gal

** Weights are approximate; refer to the serial nameplate for the specific weight.*

2199AA

Table 2.8 MEWP Specifications - S/N A601 001 638 and below

Model		SJ12 E		SJ16 E		SJ20 E	
Weight *		913 kg	2012 lb	931 kg	2054 lb	1107 kg	2440 lb
Overall width		0.77 m	30.5 in	0.77 m	30.5 in	0.80 m	31.5 in
Overall length		1.37 m	54 in	1.37 m	54 in	1.37 m	54 in
Platform size (Inside)		0.69 m x 0.91 m	27.13 in x 35.66 in	0.69 m x 0.91 m	27.13 in x 35.66 in	0.69 m x 0.91 m	27.13 in x 35.66 in
Platform traversing		0.41 m	16 in	0.41 m	16.00 in	0.41 m	16 in
Height							
Working height		5.48 m	18 ft	6.55 m	21 ft 6 in	7.77 m	25 ft 6 in
Platform elevated height		3.66 m	12 ft	4.72 m	15 ft 6 in	5.94 m	19 ft 6 in
Stowed platform height (railings up)		1.88 m	74 in	1.88 m	74 in	2.01 m	79.19 in
Drive height		Full		Full		Full	
Stowed platform height		0.75 m	29.7 in	0.75 m	29.7 in	0.75 m	29.7 in
Standard operating times							
Lift time (rated load)		15 s		21 s		26 s	
Lower time (rated load)		16 s		22 s		26 s	
Chassis							
Stowed drive speed	Forward	2.9 km/h 10 m/12 sec	1.8 mph 20 ft/8 sec	2.9 km/h 10 m/12 sec	1.8 mph 20 ft/8 sec	2.9 km/h 10 m/12 sec	1.8 mph 20 ft/8 sec
	Reverse	2.3 km/h 10 m/16 sec	1.4 mph 20 ft/10 sec	2.3 km/h 10 m/16 sec	1.4 mph 20 ft/10 sec	2.3 km/h 10 m/16 sec	1.4 mph 20 ft/10 sec
Elevated drive speed		0.5 km/h 5 m/36 sec	0.3 mph 10 ft/23 sec	0.5 km/h 5 m/36 sec	0.3 mph 10 ft/23 sec	0.5 km/h 5 m/36 sec	0.3 mph 10 ft/23 sec
Gradeability		25%		25%		25%	
Tires (solid rubber)		10 in x 4 in		10 in x 4 in		10 in x 4 in	
Hydraulic oil							
Type		ATF Dexron III		ATF Dexron III		ATF Dexron III	
Tank capacity		5.3 L	1.41 gal	5.3 L	1.41 gal	5.3 L	1.41 gal

** Weights are approximate; refer to the serial nameplate for the specific weight.*

2200AA

Table 2.9 Maximum platform capacities (evenly distributed)

Model	Wind rating	Total platform capacity		Traversing platform capacity		Manual side force	Maximum Platform height	Tilt cutout setting (side-to-side x front-to-back)
SJ12 E	0 m/s (0 mph)	227 kg (500 lb)	2 persons	227 kg (500 lb)	2 persons	400 N (90 lbf)	3.66 m (12 ft)	1.5° x 2.5°
	12.5 m/s (28 mph)		1 person		1 person	200 N (45 lbf)		
SJ16 E*	0 m/s (0 mph)	227 kg (500 lb)	1 person	227 kg (500 lb)	1 person	200 N (45 lbf)	4.72 m (15 ft 6 in)	1.5° x 2.5°
	12.5 m/s (28 mph)						3.66 m (12 ft)**	
SJ20 E*	0 m/s (0 mph)	159 kg (350 lb)	1 person	159 kg (350 lb)	1 person	200 N (45 lbf)	5.94 m (19 ft 6 in)	1.5° x 2.5°
	12.5 m/s (28 mph)						3.66 m (12 ft)**	

2163AA

**SJ16 E and SJ20 E models have wind rating option.*
***Maximum platform height for SJ16E and SJ20E respectively when wind rating option is active.*

NOTE

Occupants and materials are not to exceed the rated load. Refer to the capacity label at the entrance of the platform and the mast assembly for additional information and models equipped with options.

Table 2.10 Limit switch trip point

Description		Trip Point
LS1	Mast position	30° or 35-1/2"
LS3	Platform service position	30° or 1"
LS4	Platform deck extend	30° or 33-3/4”

2274AA

Notes

Section 3 – System Component Identification and Schematics

Table 3.1 Electrical Symbol Chart

 CIRCUITS CROSSING NO CONNECTION	 HOURMETER	 KEY SWITCH	 LIMIT SWITCH N.O.
 CIRCUITS CONNECTED	 LIGHT	 FOOT SWITCH	 LIMIT SWITCH N.O. HELD CLOSED
 BATTERY	 HYDRAULIC VALVE COIL	 TOGGLE SWITCH	 LIMIT SWITCH N.C.
 GROUND	 PROPORTIONAL HYDRAULIC VALVE COIL	 PUSH BUTTON	 LIMIT SWITCH N.C. HELD OPEN
 FUSE	 ELECTRIC MOTOR	 ROTARY SWITCH	 SILICON CONTROLLED RECTIFIER
 CIRCUIT BREAKER	 HORN	 LIMIT SWITCH	 PROXIMITY SWITCH
 VOLT METER	 EMERGENCY STOP BUTTON	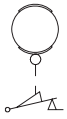 CAM OPERATED LIMIT SWITCH	 PNP TRANSISTOR
 CAPACITOR	RESISTOR	 TILT SWITCH	 NPN TRANSISTOR
 POTENTIOMETER	 LEVEL SENSOR	 SINGLE POLE SINGLE THROWN RELAY	 PRESSURE/ VACUUM SWITCH
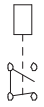 SINGLE POLE DOUBLE THROW RELAY	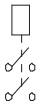 DOUBLE POLE SINGLE THROW RELAY	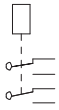 DOUBLE POLE DOUBLE THROW RELAY	 TEMPERATURE SWITCH
TRIPLE POLE DOUBLE THROW RELAY	DIODE	RHEOSTAT	

Table 3.2 Hydraulic Symbol Chart

 LINE CROSSING	 VARIABLE DISPLACEMENT PUMP	 SHUTTLE VALVE	 VELOCITY FUSE
 LINE JOINED	 HAND PUMP	 ACCUMULATOR, GAS CHARGED	 SINGLE ACTING CYLINDER
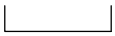 HYDRAULIC TANK	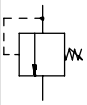 RELIEF VALVE	 CUSHION CYLINDER	 DOUBLE ACTING CYLINDER
 HYDRAULIC FILTER WITH BYPASS	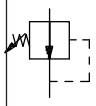 PRESSURE REDUCING VALVE	 PRESSURE SWITCH	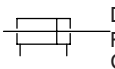 DOUBLE ACTING DOUBLE RODDED CYLINDER
 ELECTRIC MOTOR	 FIXED ORIFICE	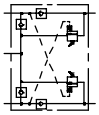 MOTION CONTROL VALVE	 SPRING APPLIED HYDRAULIC RELEASED BRAKE
 ENGINE	 ADJUSTABLE FLOW CONTROL	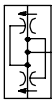 FLOW DIVIDER COMBINER	 BRAKE CYLINDER
 FIXED DISPLACEMENT PUMP	 CHECK VALVE	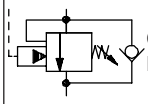 COUNTER BALANCE VALVE	 ROTARY ACTUATOR
 VARIABLE DISPLACEMENT HYDRAULIC MOTOR	 OIL COOLER	 VALVE COIL	 BI DIRECTIONAL HYDRAULIC MOTOR
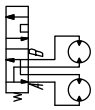 SERIES PARALLEL HYDRAULIC MOTOR	 TWO POSITION TWO WAY NORMALLY CLOSED VALVE	 TWO POSITION THREE WAY VALVE	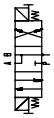 THREE POSITION FOUR WAY CLOSED CENTER OPEN PORT
 TWO POSITION TWO WAY NORMALLY OPEN VALVE	 TWO POSITION THREE WAY VALVE	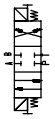 THREE POSITION FOUR WAY CLOSED CENTER CLOSED PORT	
 PRESSURE TRANSDUCER	MAIN LINES Solid	PILOT LINES Dashed	
SERVO			

3.3 Wire Number and Colour Code

WIRE NO.	WIRE COLOR	WIRE NO.	WIRE COLOR	WIRE NO.	WIRE COLOR	WIRE NO.	WIRE COLOR	WIRE NO.	WIRE COLOR
00	WHT	21	GRN/BLK	42	PNK/BLU	84	YEL/BRN	1002	RED/BLK
000	WHT	21	WHT/RED	43	PNK/RED	85	ORG/BLK/WHT	1003	ORG
B1	BLU/PINK	22	ORG/BLU	44	PNK/ORG	87	BRN/ORG	1006	BLU
01	PUR/BLK	23	BLK/WHT/RED	49	GRN	88	BRN/PNK	1008	GRY
02	WHT	23	BLK/WHT	50	BRN/WHT	89	BRN/GRN	1100	BLK
03	GRN/PUR	24	BLU/BLK	55	GRY/RED	99	PUR/RED	1103	ORG
04	RED/YEL	25	ORG/GRN	56	WHT/ORG	100	RED	2001	BRN
05	PUR/BLACK	26	GRN	57	BLK/WHT	101		2002	RED
06		27	BLK	59	ORG/BLK	102	PNK	2005	GRN/WHT
07	RED	28	GRN/RED	60	BLK/RED/GRN	103	RED	3008	GRY
08	PUR/WHT	29	BLU/YEL	71	BLU/RED	103B	BLK	4002	RED
09	ORG/RED	30	BRN	72	WHT/BLK/RED	103C	WHT	7002	RED
10	BLU/WHT	31	RED/WHT	73	WHT/RED/GRN	104	RED		
11	YEL/BLK	32	GRN/BLK	74	BLK/RED/GRN	105	GRN		
12	BRN/RED	33		75	WHT/RED/GRN	106	BLU		
13	ORG	34	GRN/WHITE	76	RED/GRN	200	BLK/WHT		
14	BLK	35	RED/BRN	77	GRN/BLK/WHT	203	ORG/BLK		
15	BLU	36	YEL	78	RED/BLK/WHT	205	GRN		
16	WHT/BLK	37	GRN/WHT	79	YEL/PNK	209	WHT/BLK		
17	BLU/RED	38		80	YEL/PUR	900	WHT		
18	RED/BLK	39	GRN/WHT	81	YEL/RED	902	WHT		
19	ORG/BLK	40	PNK/YEL	82	YEL/BLU	910	BLK		
20	BLK/WHT/RED	41	PNK	83	YEL/ORG	1001	BRN/WHT		

This table is to be used as a wire number/color reference for electrical drawings and schematics.
All wire numbers will retain their original color coding, for example if wire 7 is red, wire 7A, 7B, and 7C will also be red.

3.4 Hydraulic Parts List

Index No.	Skyjack Part No.	Description
C1-3	234390	CYLINDER, Multistage with cushion **(SJ12 E)**
C-4	234430	CYLINDER, Multistage with cushion **(SJ16 E)**
C-4	234130	CYLINDER, Multistage with cushion **(SJ20 E)**
C5	234078	CYLINDER, Steer
CV1	234711	VALVE, Check - Poppet
F1	234269	FILTER, Screen
F2	234709	FILTER, Element spin-on 7M
MB1	234720	MANIFOLD, Valve assy - Elec 24VDC EW/4W
OCV1	234654	ORIFICE, Check valve - Lift cylinder
OR2	310056	ORIFICE, Fitting Assembly - Hydr w/ orifice
P1	234703	PUMP, AP100/3.5 ext Tang no CVRS
RV1	234715	VALVE, Relief - Max VM01 HDM10 T.95-210
RV2	234716	VALVE, Relief - Cart DA size 8
SV1	234713	VALVE, Cartridge - 3W/2P #8 3000 psi
SV2	234714	VALVE, Cartridge - 4W/3P 3000 psi CC 8
SV3	151696	VALVE, Emergency lowering

3.5 Electrical Parts List

Index No.	Skyjack Part No.	Description
30ACR	108589	RELAY, Brake
2H-13	151683	COIL, 24 V DT with diode
3H-14	234717	COIL, 24 V
4H-23/24	234717	COIL, 24 V
AT1	234997	TILT SWITCH
B1/B2	-	BATTERY, 12V Deep cycle 155Ah - US 12V XC2
	-	BATTERY, 6 V with lifting lugs - U2200XC2 **(Optional)**
BCI	122093	INDICATOR, Batterty charge
BP-29	215817	BEEPER
C1	146475	MOTOR CONTACTOR
CB1/CB2	117325	CIRCUIT BREAKER, 15A
CHARGER	234293	DELTAQ CHARGER
CM1	234005	CONTROLLER, ZAPI 3IN1
DXX	234227	DIODE, Schottky 30V 3A
DS1	240884	ZAPI DISPLAY
F1	216103	FUSE, 300A
FL-1	234591	DUAL FLASHING LIGHTS
H1	146649	HORN, 24 V Low tone
LS1	199405	LIMIT SWITCH, Base
LS3	199405	LIMIT SWITCH, Platform service position
LS4	199405	LIMIT SWITCH, Platform deck extended position
M1	234158	POWER UNIT
M2	234150	MOTOR, Right Traction
M3	234150	MOTOR, Left Traction
S1	119725	SWITCH, Main disconnect
S2	147054	SWITCH, Base - Lift/lower
S3	234118	SWITCH, Platform - Lift/Off/Drive
S4	147053	SWITCH, Emergency stop - Platform control
S5	115573	SWITCH, Toggle - Diagnostic
S6	115573	SWITCH, Toggle - Brake release
S7	171911	SWITCH, Toggle - Outdoor option **(Optional)**
S8	147054	SWITCH, Platform horn
S9	220494	SWITCH, SGLE option **(Optional)**
S10	149536	SWITCH, Base - Idle/Platform/Base
S28	147053	SWITCH, Emergency stop - Base control

3.6 Hydraulic Connections

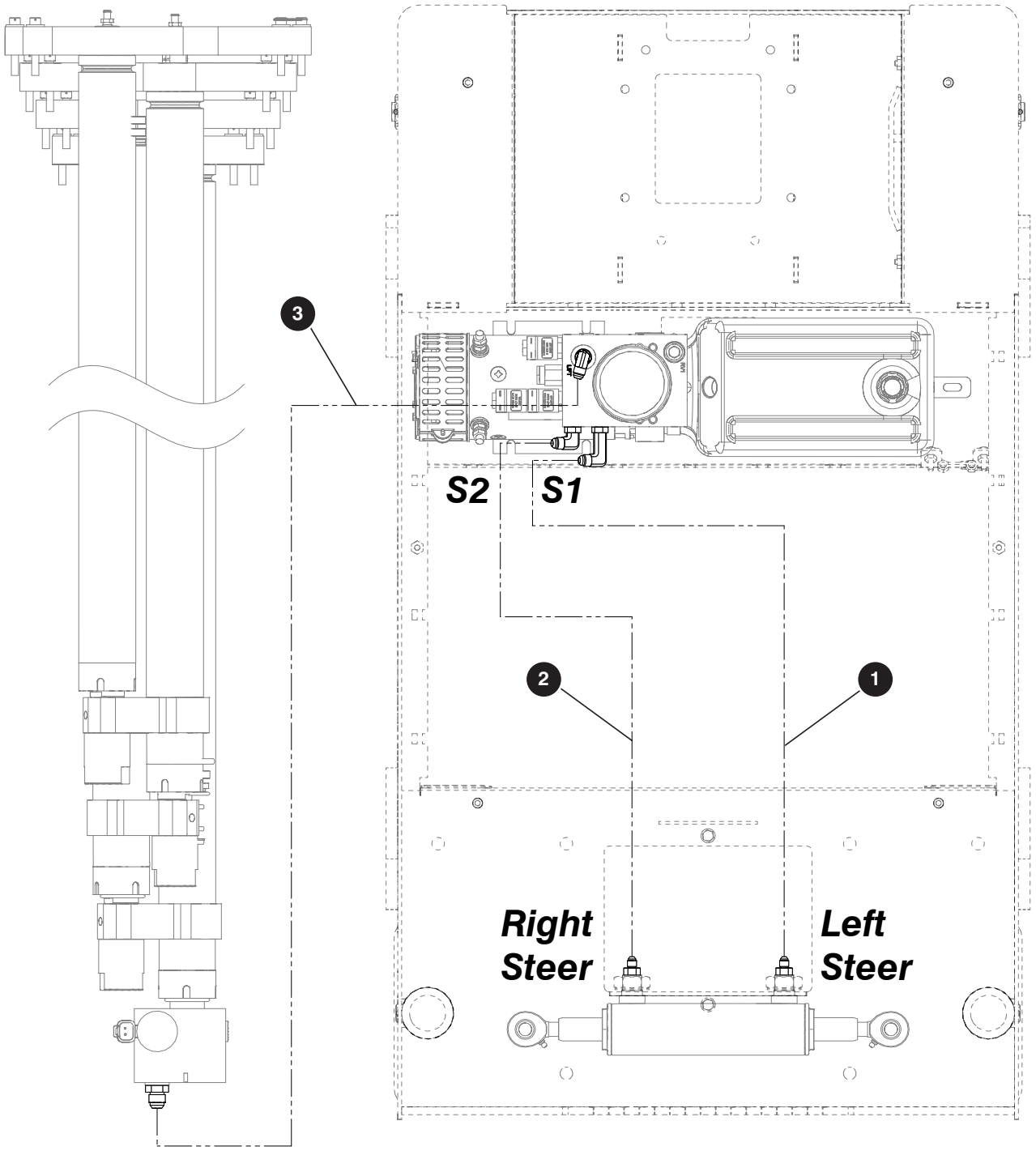

3.7 Platform Control Box Wiring

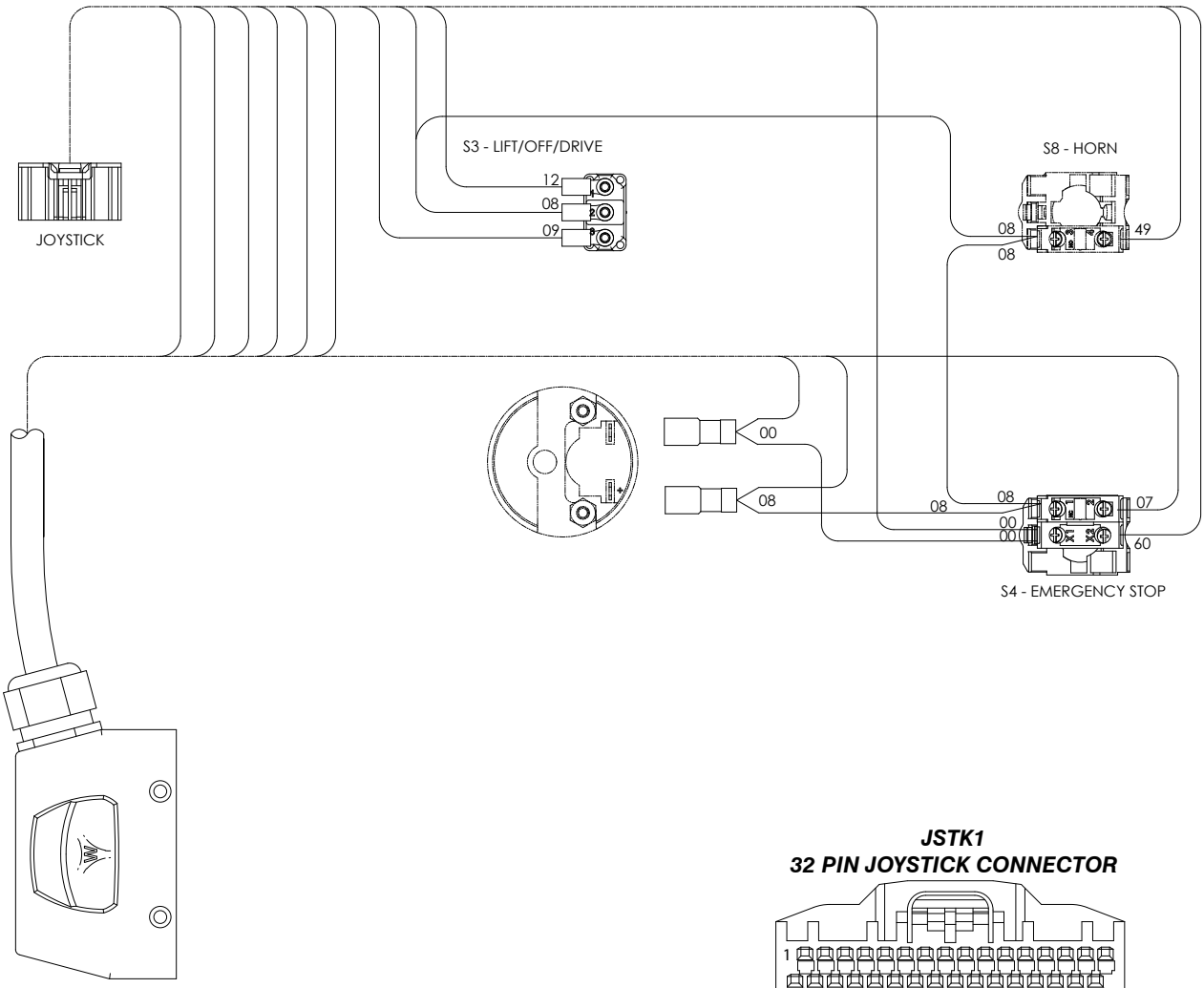

16 PIN CONTROL BOX CONNECTOR
X1 CONNECTION

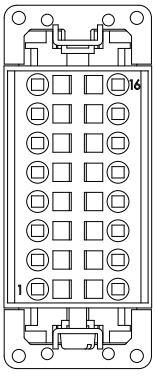

POSITION	COLOUR	CIRCUIT
1	RED	07
2	PURPLE/WHITE	08
3	PURPLE/WHITE	08C
4	PURPLE/WHITE	08C
5	PURPLE/WHITE	08C
6	GREY/ORANGE	12A
7	BLACK/GREEN	51
8	BROWN/WHITE	82
9	YELLOW	CAN HI
10	GREEN	CAN LO
11	BLACK	120
12	BLACK	120A
13	N/A	N/A
14	WHITE	00
15	WHITE	00
16	WHITE	00

JSTK1
32 PIN JOYSTICK CONNECTOR

POSITION	CIRCUIT	FUNCTION	COLOUR
1-6	N/A	N/A	N/A
7	12	DRIVE	BROWN/RED
8	49	HORN	GREEN
9-14	N/A	N/A	N/A
15	60	PWR LED	BLACK/RED/GREEN
16	08C	PWR	PURPLE/WHITE
17	08	PLTFRM ENBLE	PURPLE/WHITE
18	51	SERVICE POS	BLACK/GREEN
19-21	N/A	N/A	N/A
22	120	INDOOR LIGHT	BLACK
23	09	LIFT	ORANGE/RED
24	12A	DECK EXT	GRAY/ORANGE
25	82A	LOADCELL PWR	BROWN/WHITE
26	CAN LO	CAN LOW	GREEN
27	CAN HI	CAN HIGH	YELLOW
28-29	N/A	N/A	N/A
30	120A	SPARE	BLACK
31	N/A	N/A	N/A
32	00	GND	WHITE

3.8 Platform Control Cable Wiring

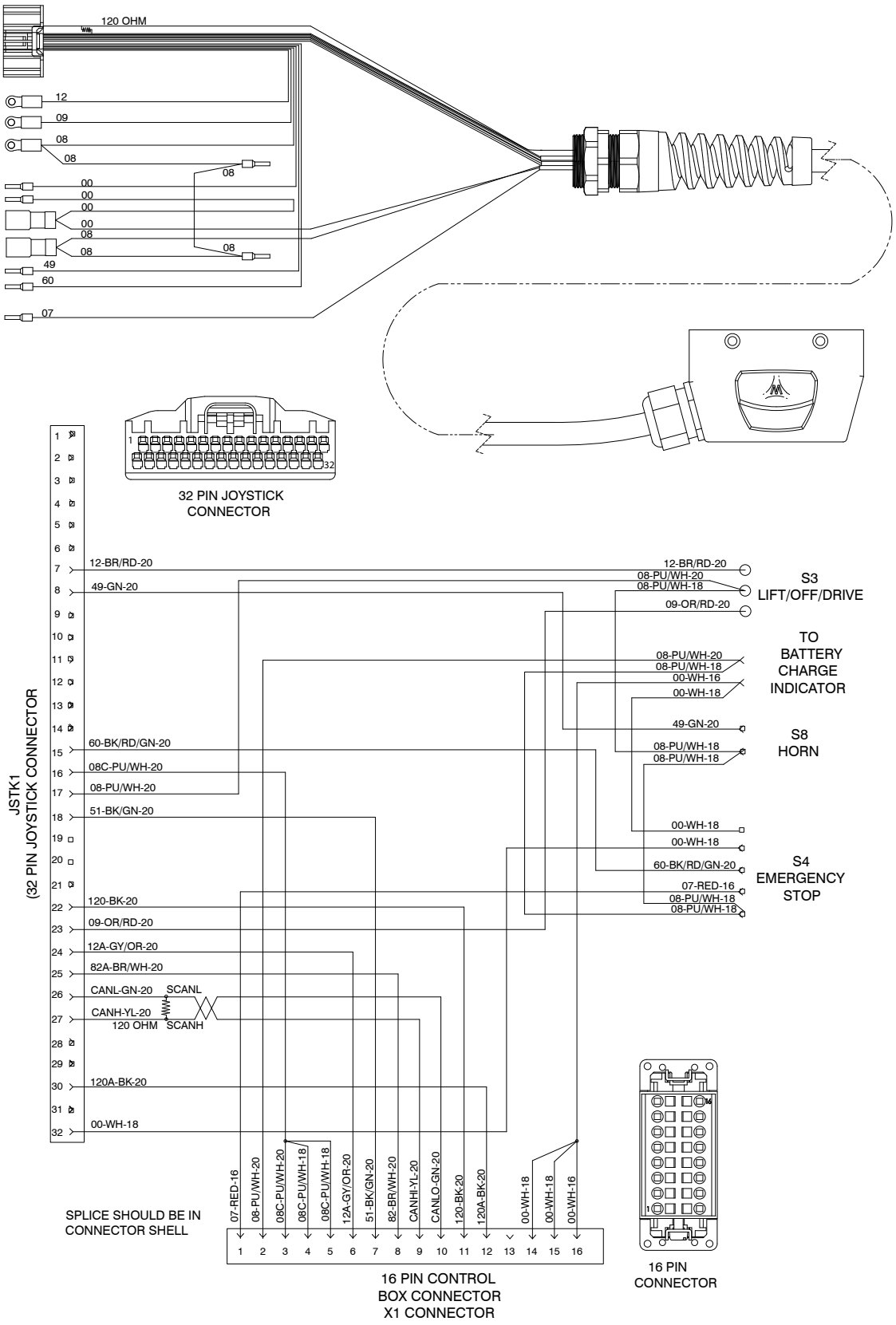

M234029AF

3.9 Platform Control Box Wiring - SGLE

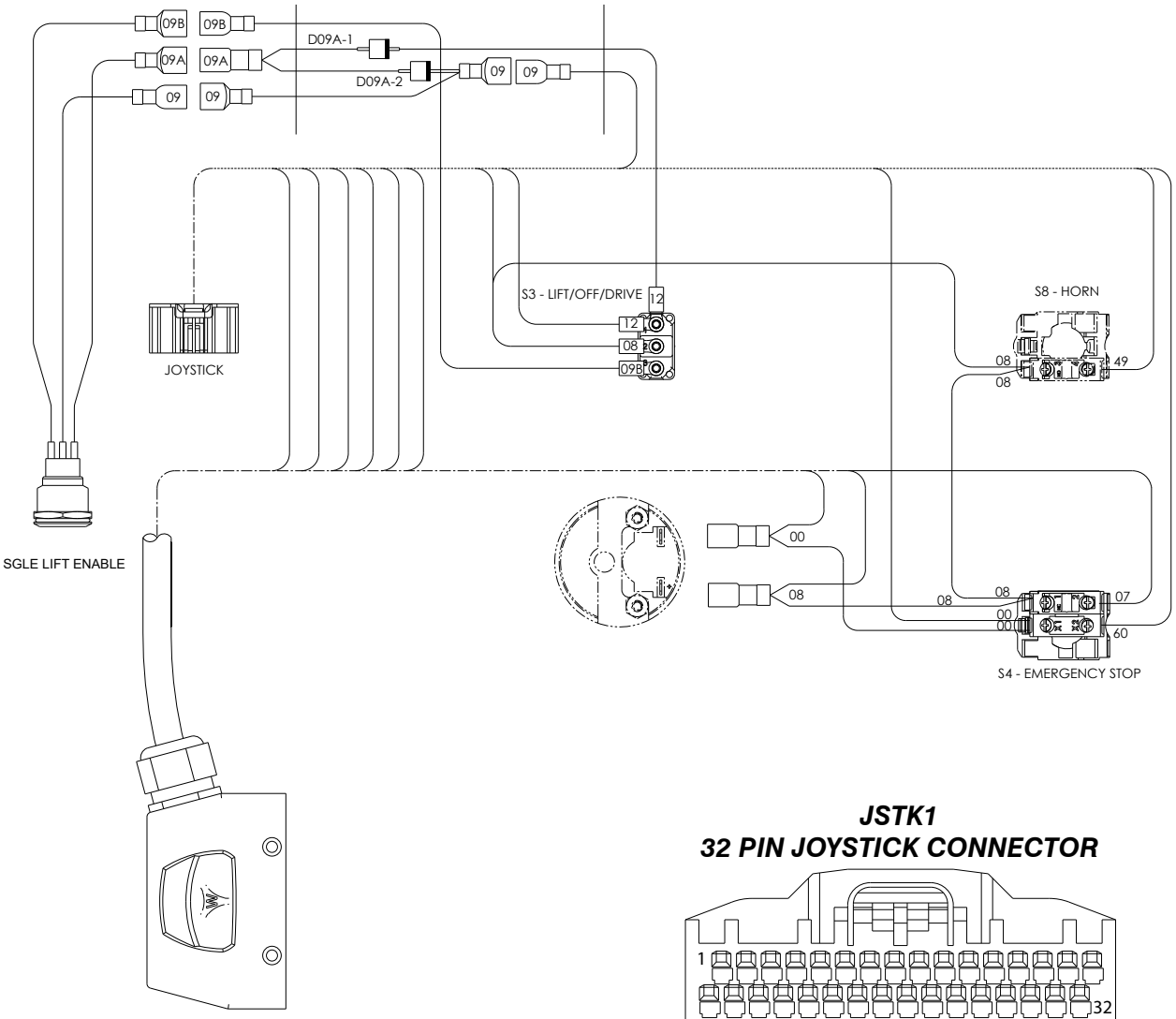

JSTK1
32 PIN JOYSTICK CONNECTOR

POSITION	CIRCUIT	FUNCTION	COLOUR
1-6	N/A	N/A	N/A
7	12	DRIVE	BROWN/RED
8	49	HORN	GREEN
9-14	N/A	N/A	N/A
15	60	PWR LED	BLACK/RED/GREEN
16	08C	PWR	PURPLE/WHITE
17	08	PLTFRM ENBLE	PURPLE/WHITE
18	51	SERVICE POS	BLACK/GREEN
19-21	N/A	N/A	N/A
22	120	INDOOR LIGHT	BLACK
23	09	LIFT	ORANGE/RED
24	12A	DECK EXT	GRAY/ORANGE
25	82A	LOADCELL PWR	BROWN/WHITE
26	CAN LO	CAN LOW	GREEN
27	CAN HI	CAN HIGH	YELLOW
28-29	N/A	N/A	N/A
30	120A	SPARE	BLACK
31	N/A	N/A	N/A
32	00	GND	WHITE

16 PIN CONTROL BOX CONNECTOR
X1 CONNECTION

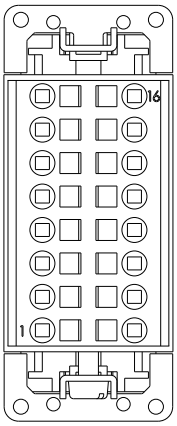

POSITION	COLOUR	CIRCUIT
1	RED	07
2	PURPLE/WHITE	08
3	PURPLE/WHITE	08C
4	PURPLE/WHITE	08C
5	PURPLE/WHITE	08C
6	GREY/ORANGE	12A
7	BLACK/GREEN	51
8	BROWN/WHITE	82
9	YELLOW	CAN HI
10	GREEN	CAN LO
11	BLACK	120
12	BLACK	120A
13	N/A	N/A
14	WHITE	00
15	WHITE	00
16	WHITE	00

M234135AF

3.10 Platform Control Cable Wiring - SGLE

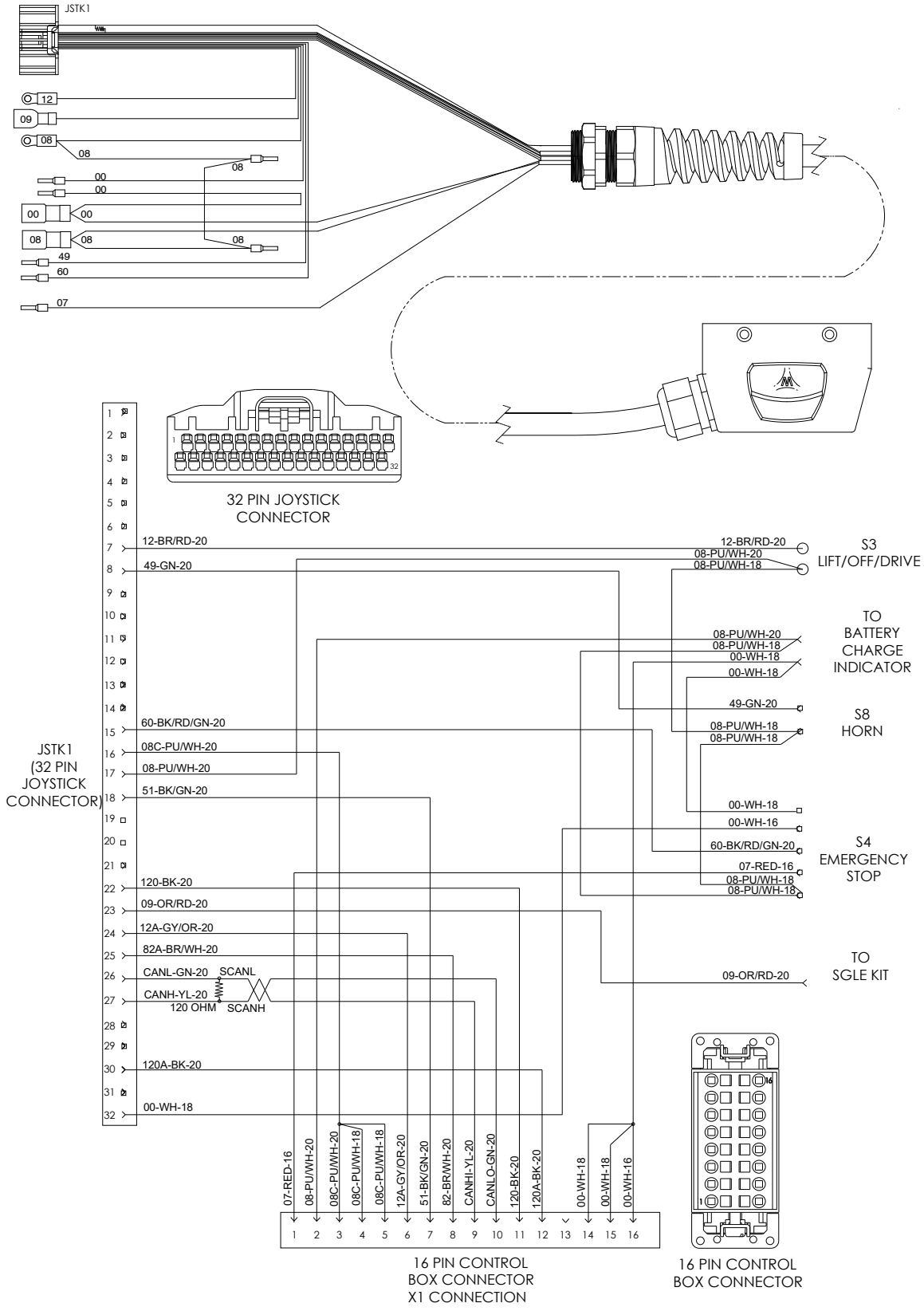

M234136AF

3.11 Beeper

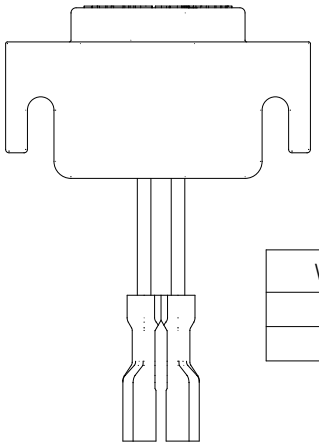

WIRE COLOUR	WIRE LABEL
RED	+
BLACK	-

3.12 Base Limit Switch

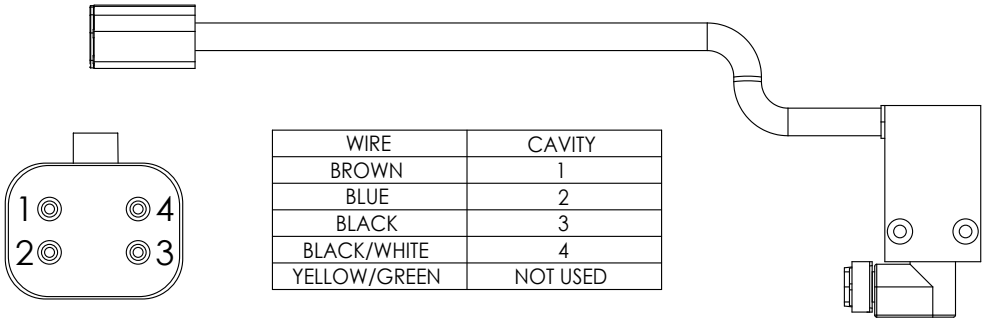

WIRE	CAVITY
BROWN	1
BLUE	2
BLACK	3
BLACK/WHITE	4
YELLOW/GREEN	NOT USED

3.13 Platform Limit Switches

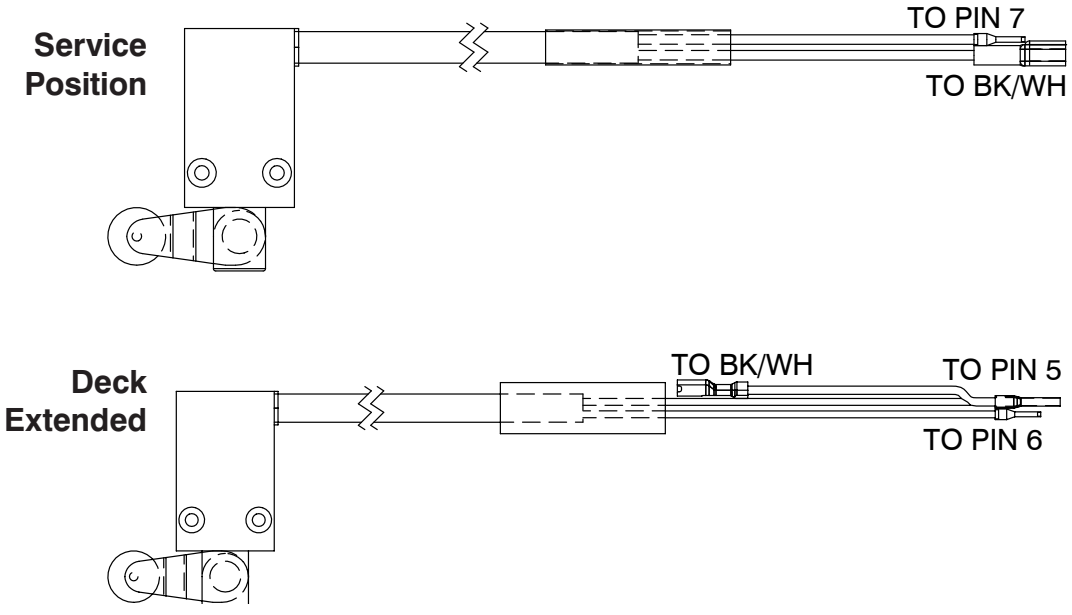

M215817AC_M234204AE_M234218AD_M234219AE

3.14 Mast Cable

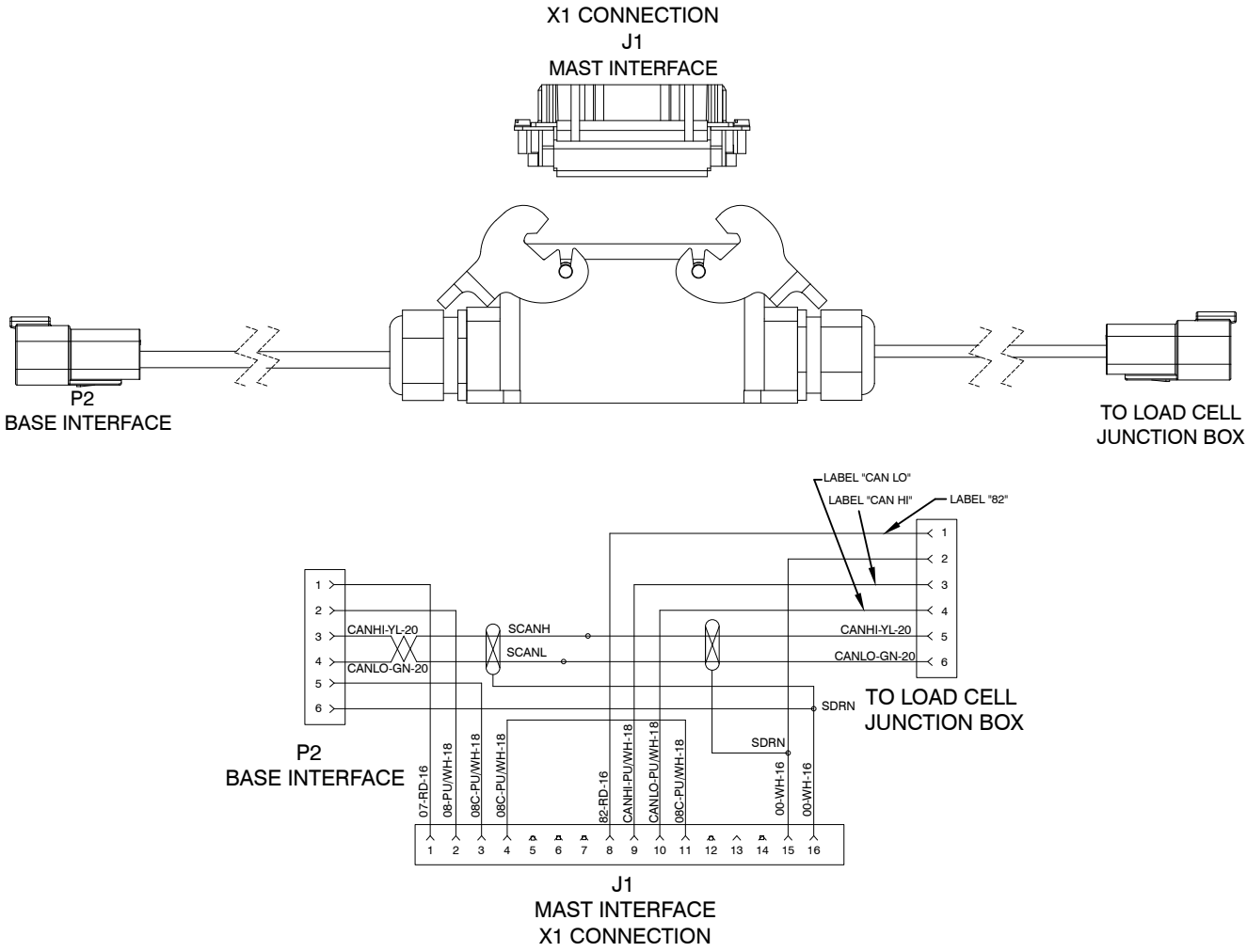

3.15 Battery Monitoring System Harness

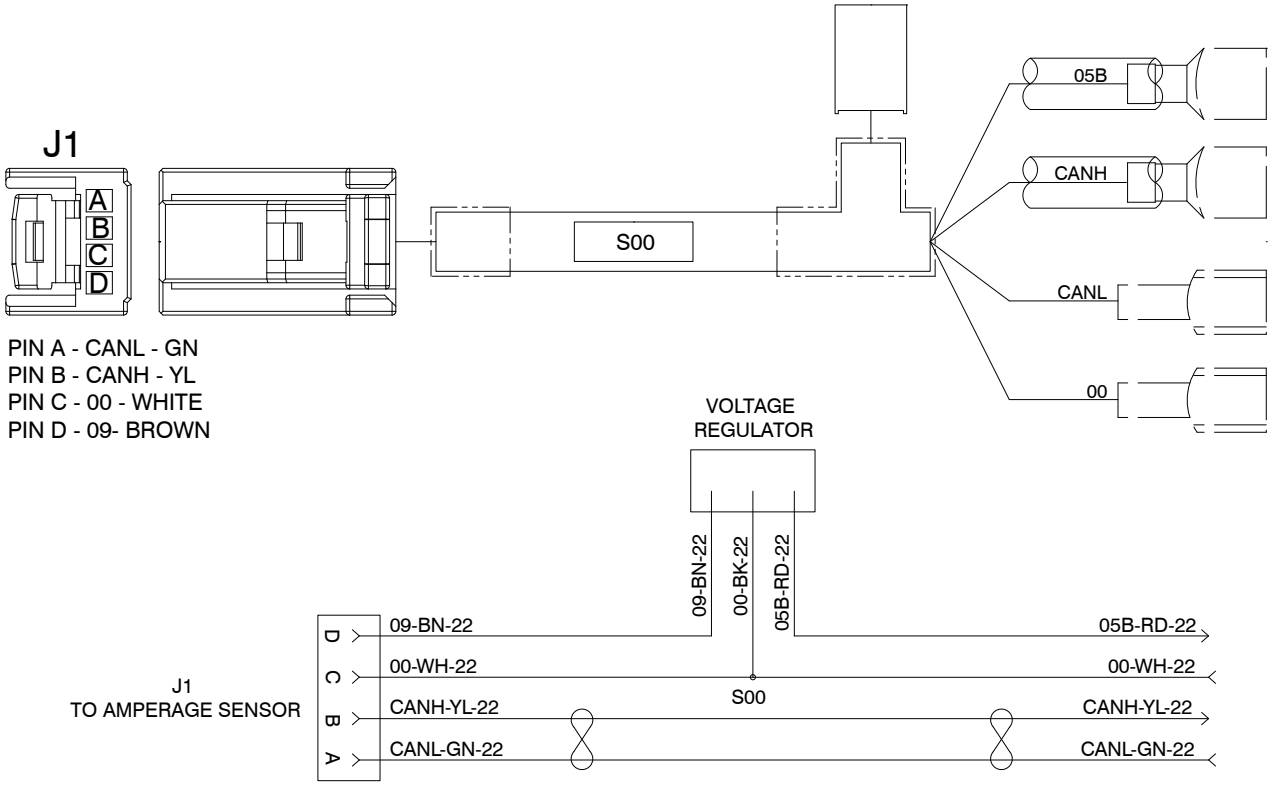

3.16 Wheel Motor Controller Connections

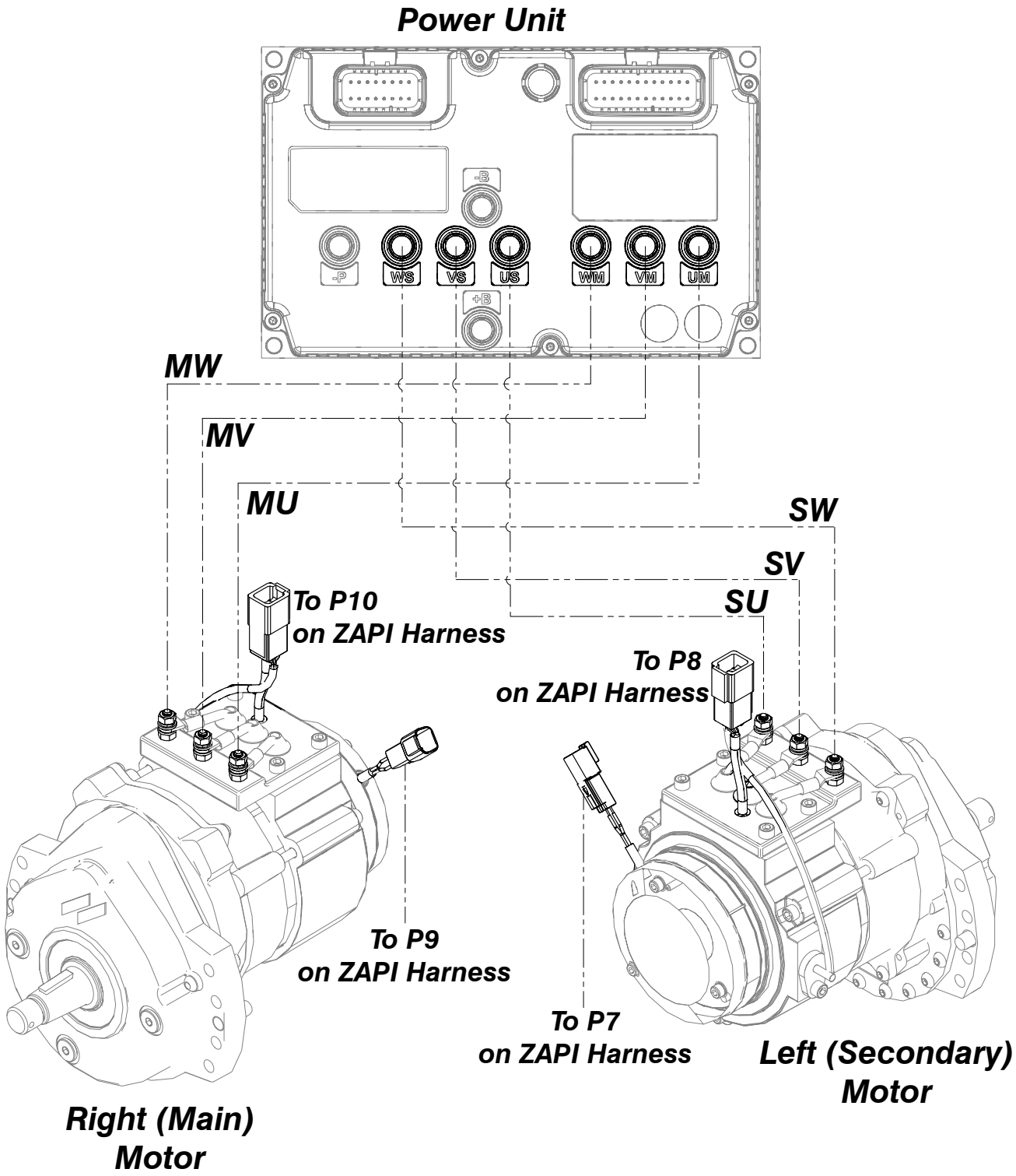

M234099AC2

3.17 Battery wiring connections

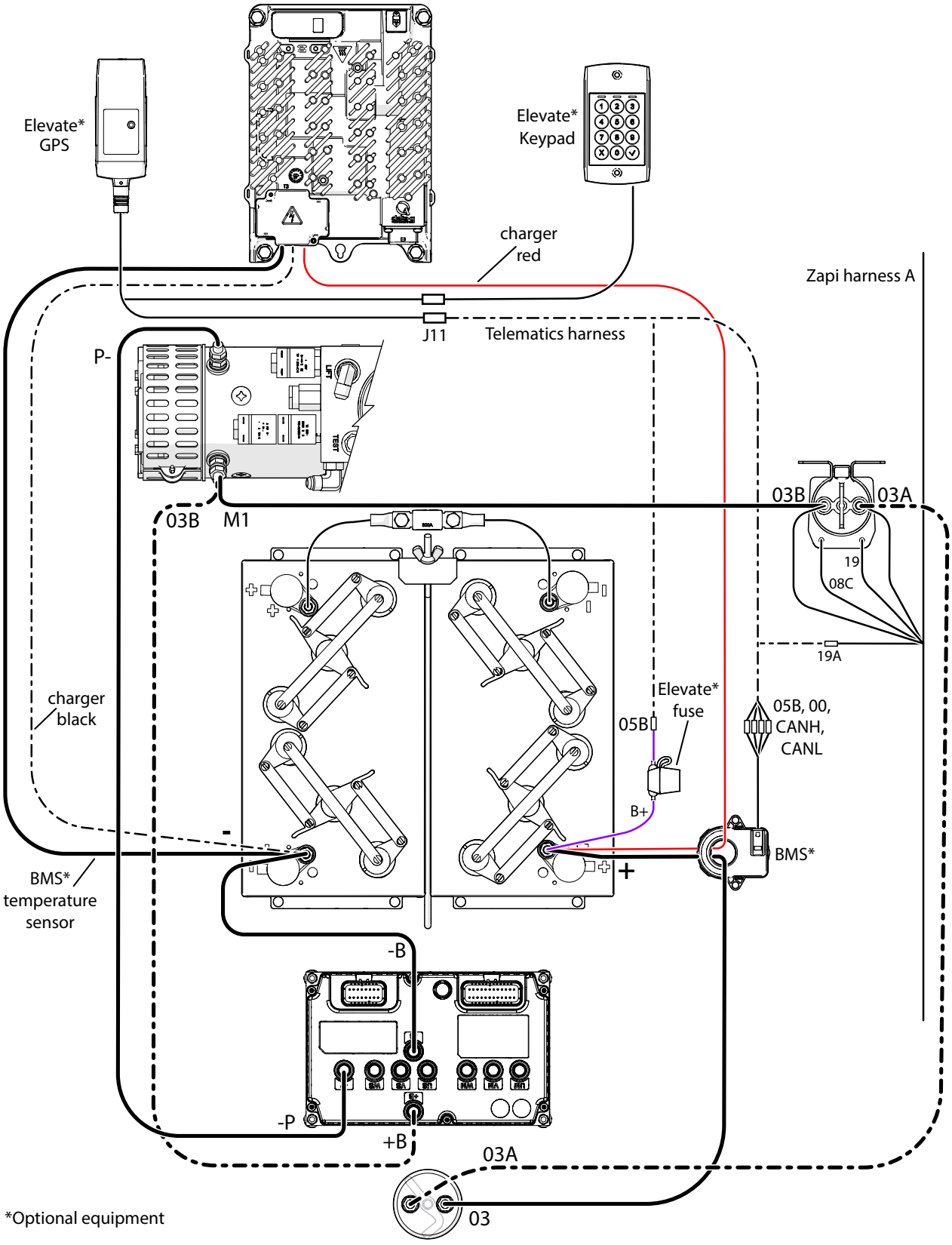

M75119AB

3.18 Major Component Identification

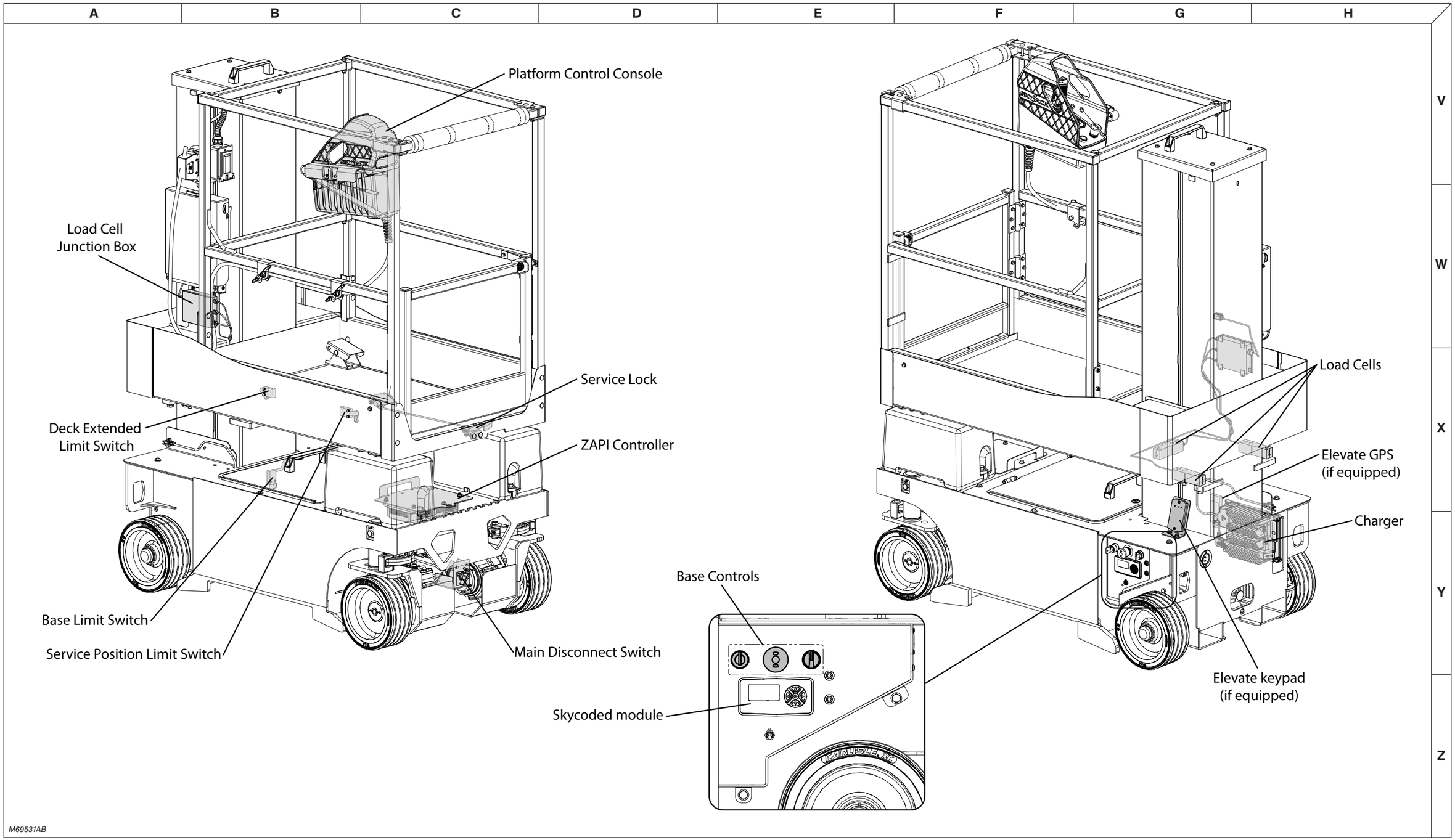

3.19 Hydraulic Schematic

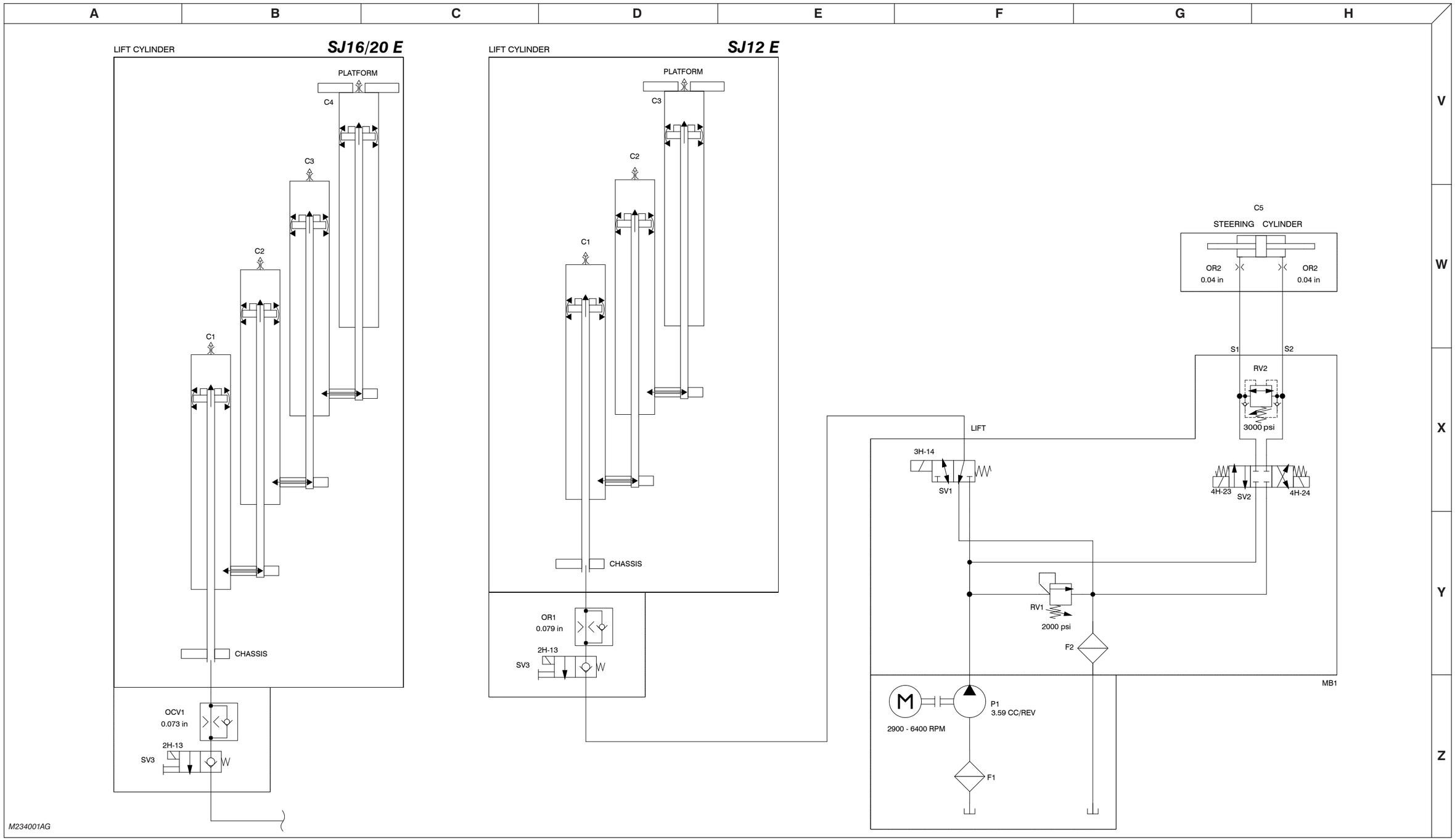

3.20 Base Control Wiring

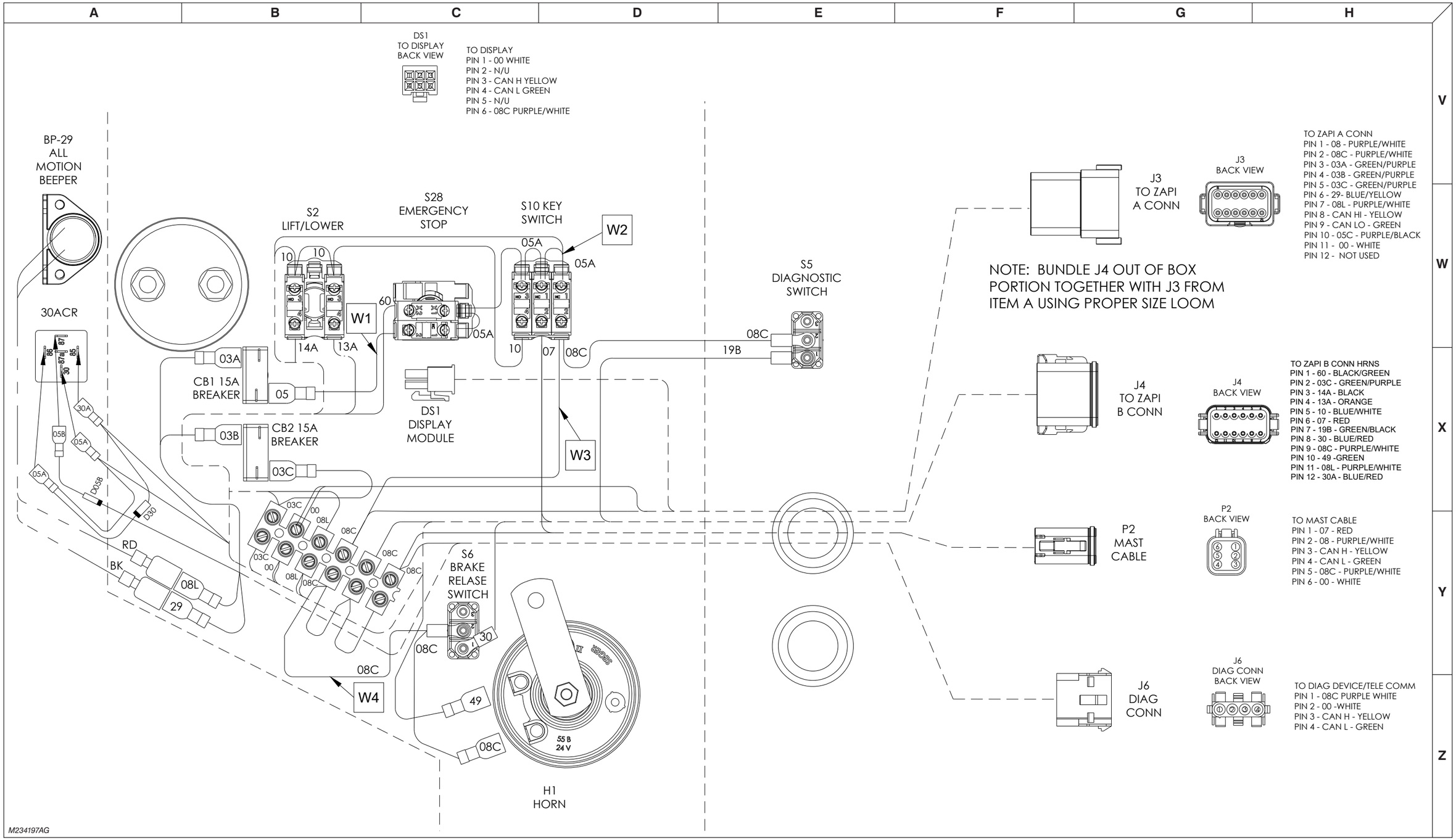

3.21 Main Harness - ZAPI A

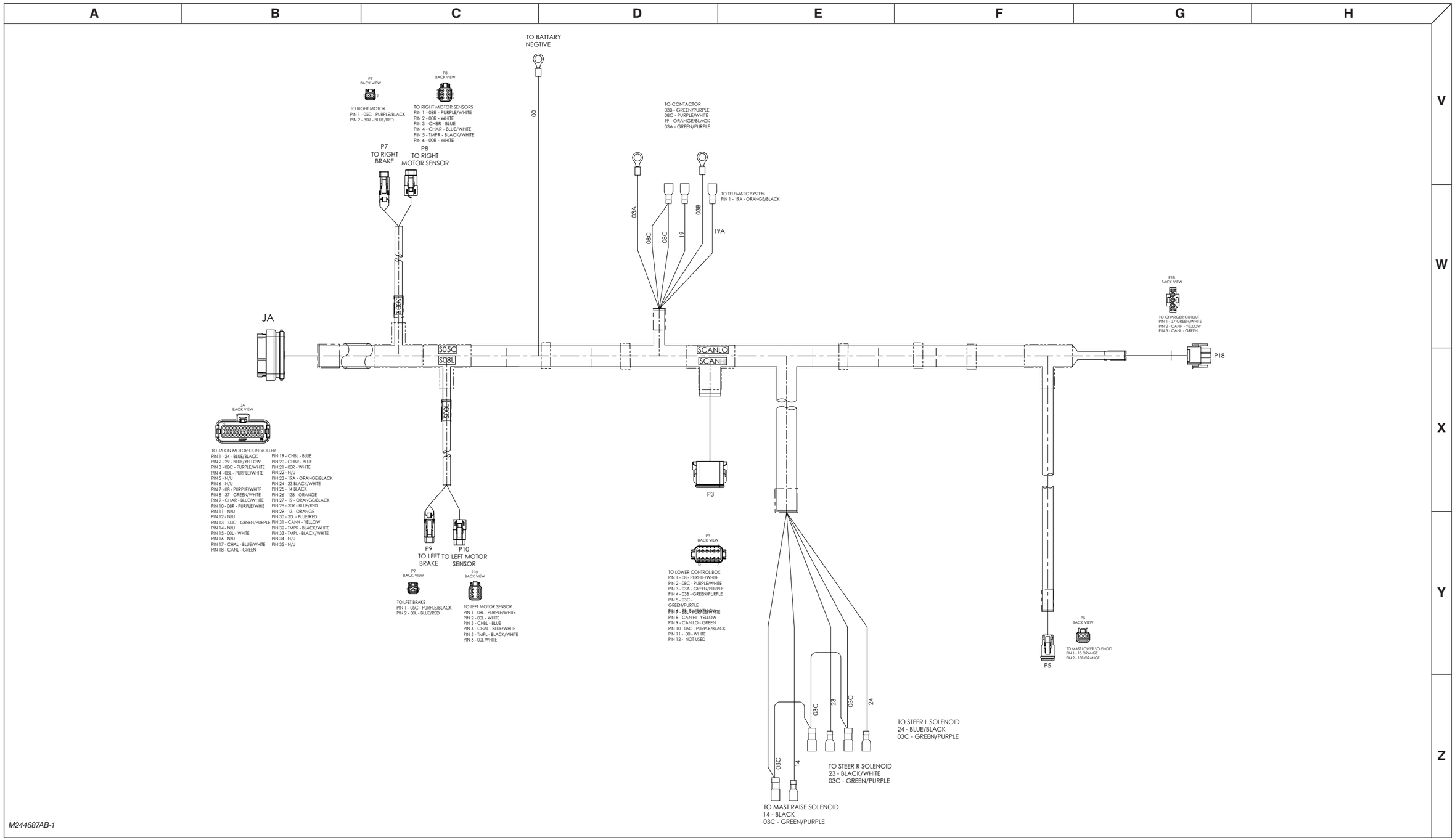

M244687AB-1

3.22 Main Harness Wiring - ZAPI A

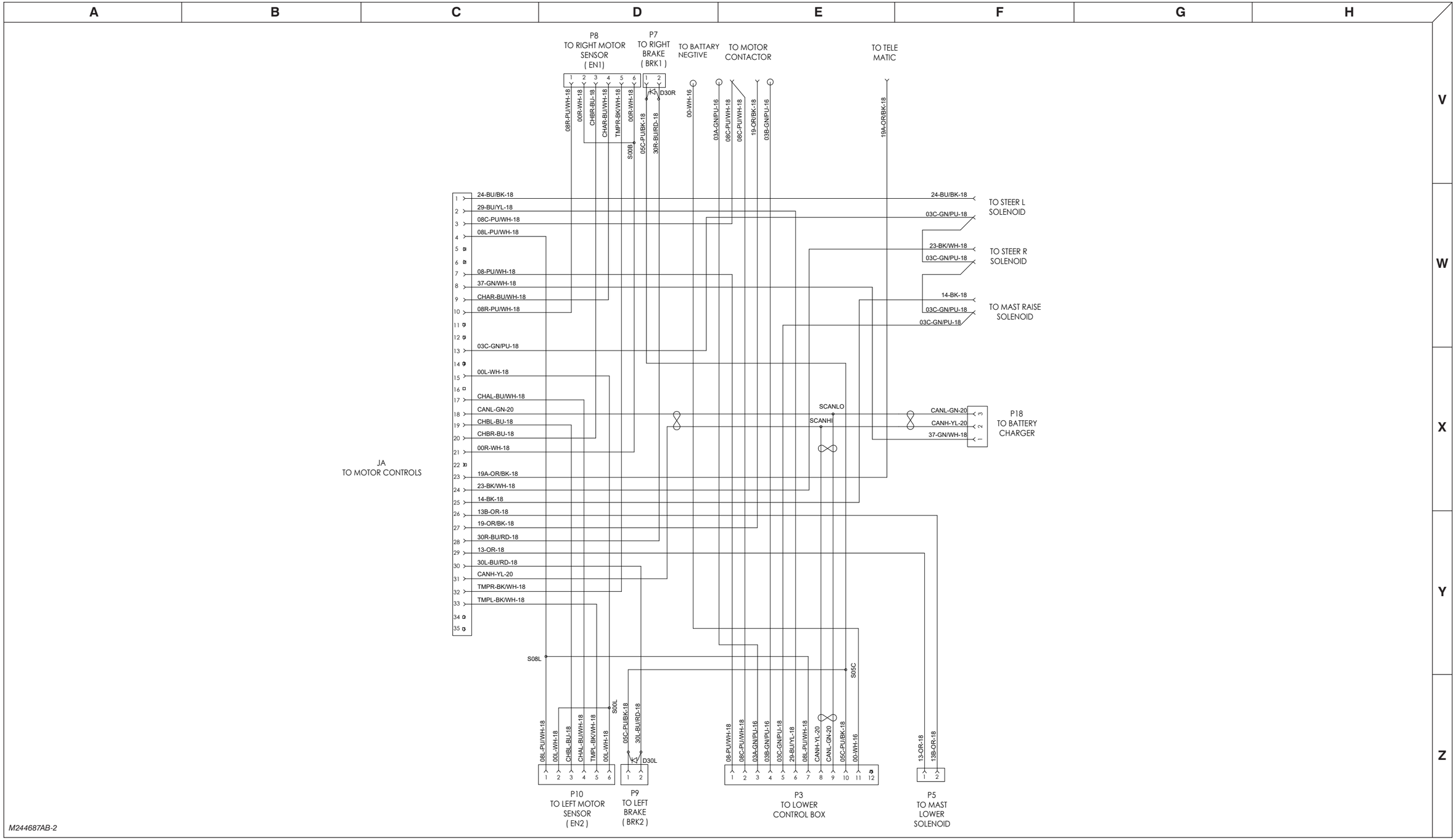

M244687AB-2

3.23 Main Harness - ZAPI B

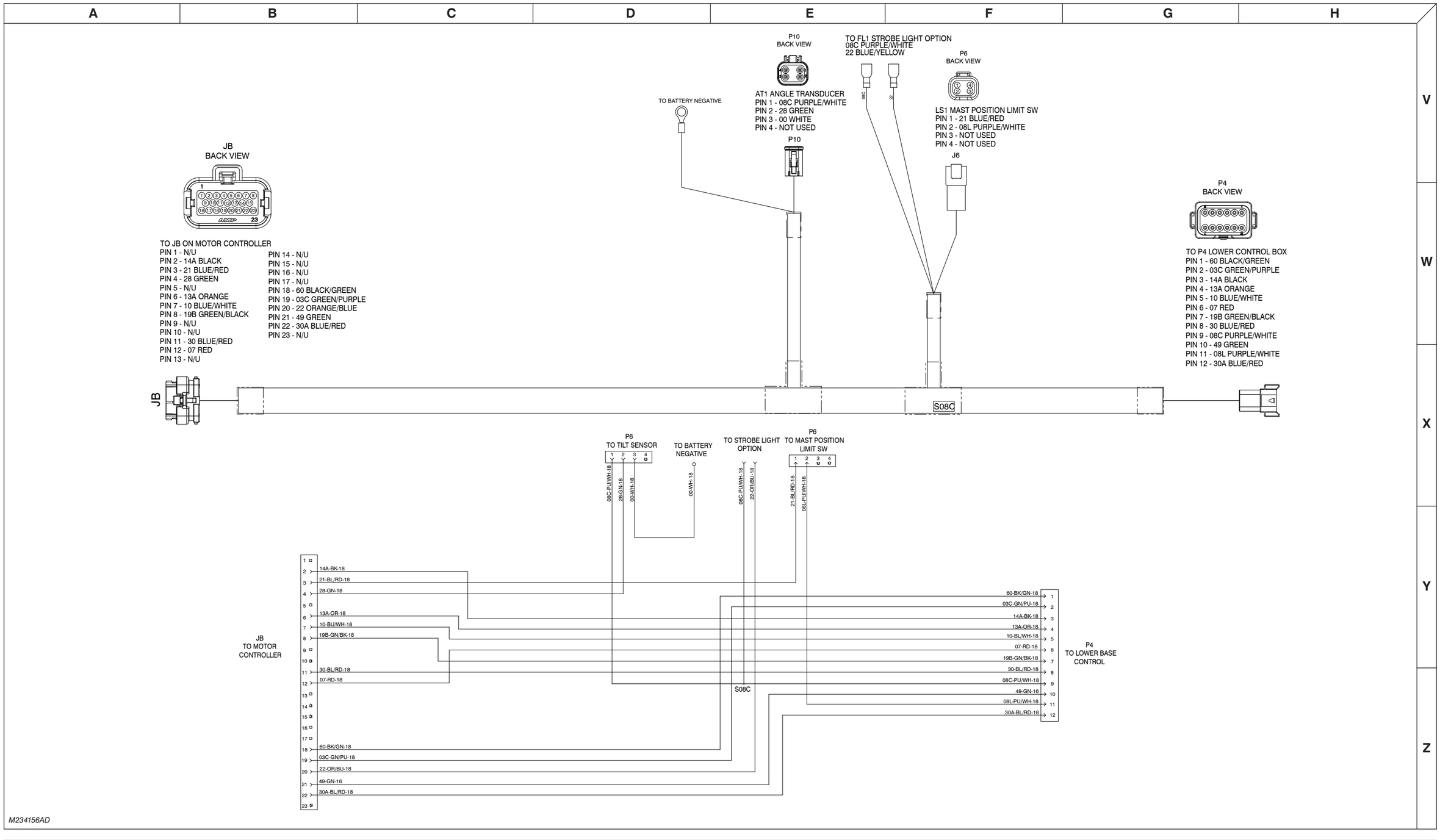

3.24 Elevate Telematics Harness

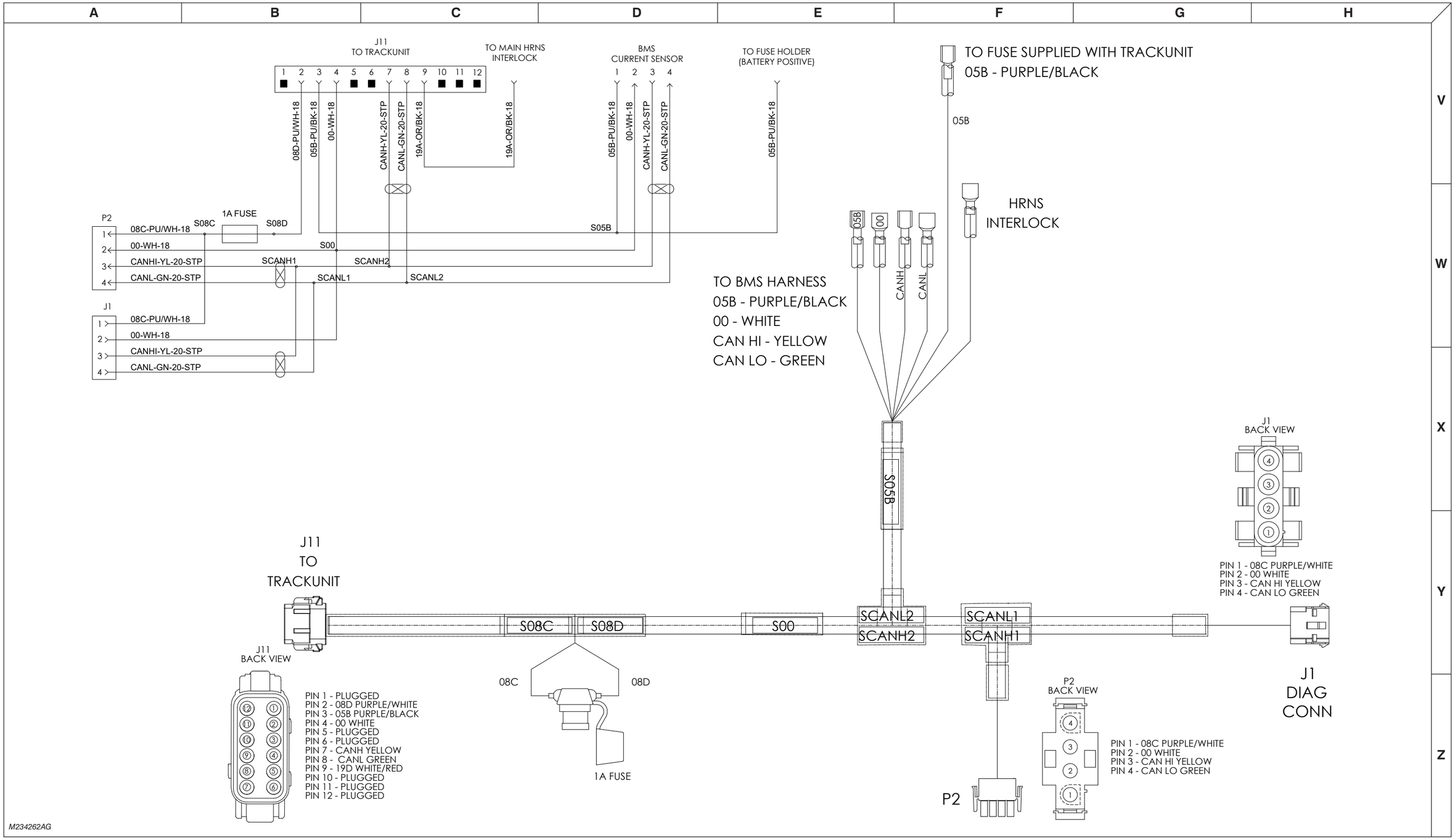

A B C D E F G H

V W X Y Z

This page is intentionally left blank.

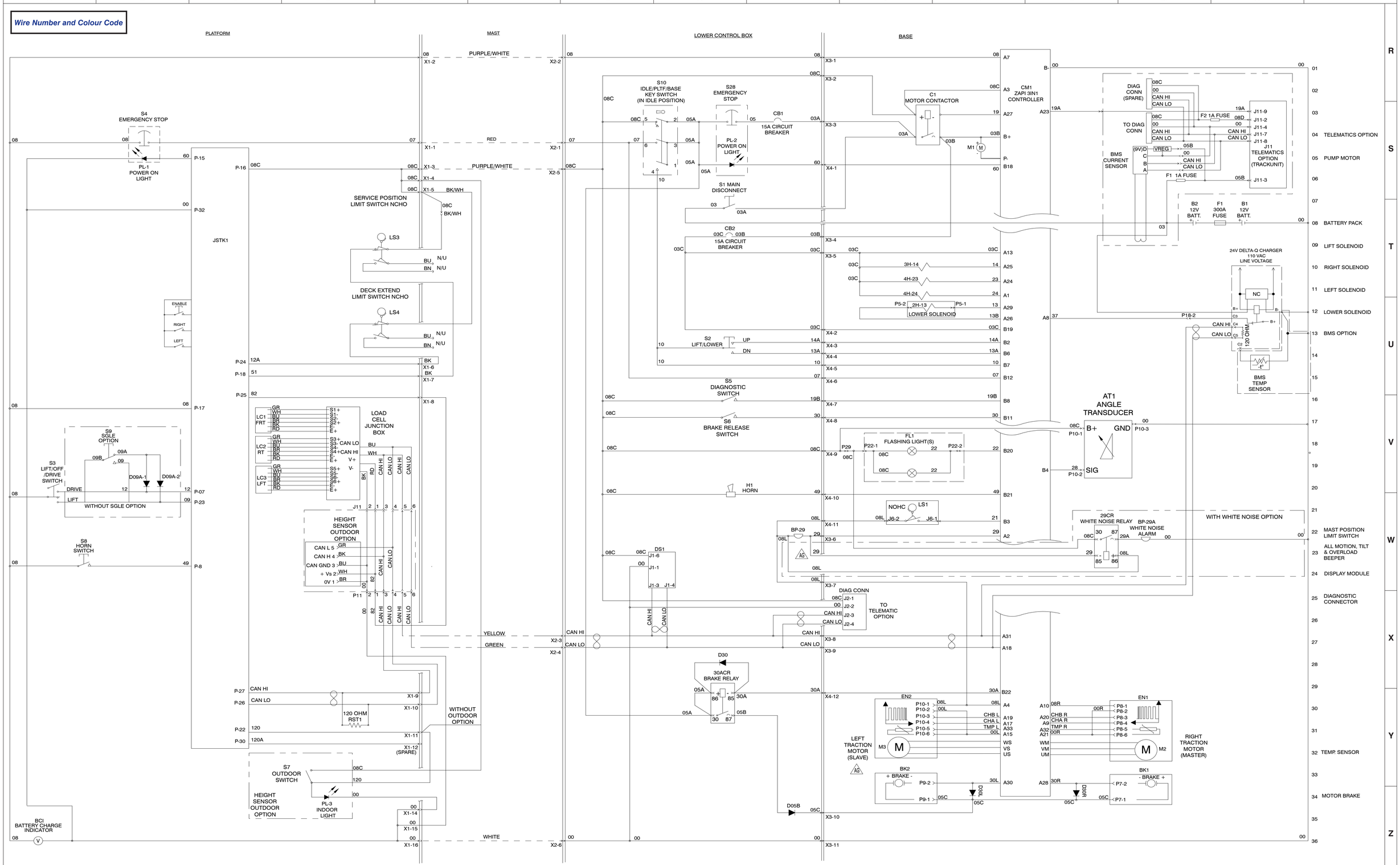
Wire Number and Colour Code
PLATFORM
MAST
LOWER CONTROL BOX
BASE
S4 EMERGENCY STOP
PL-1 POWER ON LIGHT
S9 SGLE OPTION
S3 LIFT/OFF /DRIVE SWITCH
WITHOUT SGLE OPTION
S8 HORN SWITCH
BCI BATTERY CHARGE INDICATOR
JSTK1
ENABLE
RIGHT
LEFT
SERVICE POSITION LIMIT SWITCH NCHO
LS3
DECK EXTEND LIMIT SWITCH NCHO
LS4
LOAD CELL JUNCTION BOX
HEIGHT SENSOR OUTDOOR OPTION
CAN L 5
CAN H 4
CAN GND 3
+ Vs 2
0V 1
S7 OUTDOOR SWITCH
PL-3 INDOOR LIGHT
120 OHM RST1
WITHOUT OUTDOOR OPTION
S10 IDLE/PLTF/BASE KEY SWITCH (IN IDLE POSITION)
S28 EMERGENCY STOP
PL-2 POWER ON LIGHT
CB1 15A CIRCUIT BREAKER
S1 MAIN DISCONNECT
CB2 15A CIRCUIT BREAKER
S2 LIFT/LOWER
S5 DIAGNOSTIC SWITCH
S6 BRAKE RELEASE SWITCH
H1 HORN
DS1
30ACR BRAKE RELAY
D05B
C1 MOTOR CONTACTOR
CM1 ZAPI 3IN1 CONTROLLER
3H-14
4H-23
4H-24
2H-13
LOWER SOLENOID
FL1 FLASHING LIGHT(S)
NOHC LS1
BP-29
DIAG CONN (SPARE)
TO DIAG CONN
BMS CURRENT SENSOR
F2 1A FUSE
F1 1A FUSE
J11 TELEMATICS OPTION (TRACKUNIT)
B2 12V BATT.
F1 300A FUSE
B1 12V BATT.
24V DELTA-Q CHARGER 110 VAC LINE VOLTAGE
BMS TEMP SENSOR
120 OHM
AT1 ANGLE TRANSDUCER
29CR WHITE NOISE RELAY
BP-29A WHITE NOISE ALARM
WITH WHITE NOISE OPTION
DIAG CONN
TO TELEMATIC OPTION
EN2
EN1
LEFT TRACTION MOTOR (SLAVE)
RIGHT TRACTION MOTOR (MASTER)
BK2
BK1
D30
D30R
D30L
PURPLE/WHITE
RED
YELLOW
GREEN
WHITE
CAN HI
CAN LO
X1-1
X1-2
X1-3
X1-4
X1-5
X1-6
X1-7
X1-8
X1-9
X1-10
X1-11
X1-12 (SPARE)
X1-14
X1-15
X1-16
X2-1
X2-2
X2-3
X2-4
X2-5
X2-6
X3-1
X3-2
X3-3
X3-4
X3-5
X3-6
X3-7
X3-8
X3-9
X3-10
X3-11
X4-1
X4-2
X4-3
X4-4
X4-5
X4-6
X4-7
X4-8
X4-9
X4-10
X4-11
X4-12
P-15
P-16
P-17
P-18
P-23
P-24
P-25
P-26
P-27
P-30
P-32
P-07
P-8
TELEMATICS OPTION
PUMP MOTOR
BATTERY PACK
LIFT SOLENOID
RIGHT SOLENOID
LEFT SOLENOID
LOWER SOLENOID
BMS OPTION
TEMP. SENSOR
MOTOR BRAKE
MAST POSITION LIMIT SWITCH
ALL MOTION, TILT & OVERLOAD BEEPER
DISPLAY MODULE
DIAGNOSTIC CONNECTOR
M234002AG_2
3.25 Electrical Schematic

Notes

Section 4 – Troubleshooting Information

4.1 Introduction

The following pages contain a table of Troubleshooting for locating and correcting most service trouble which can develop. Careful and accurate analysis of the systems listed in the table of Troubleshooting will localize the trouble more quickly than any other method. This manual cannot cover all possible troubles and deficiencies that may occur.If a specific trouble is not listed, isolate the major component in which the trouble occurs, isolate whether the problem is electrical or hydraulic, and then isolate and correct the specific problem.

The content of this section is separated into “probable cause” and “remedy.” The information in the left-hand column, preceded by a number, represents the “probable cause.” The information in the right-hand column, in bold text, represents the “remedy” to the “probable cause” directly beside it.See the example below for clarification.

1. Probable cause	**Remedy**

4.2 Electrical System

4.2-1 All Controls Inoperative

NOTE

Functions may be disabled by the load sense system. Please first make sure that the mast is fully retracted, the platform is free of added weight, and there are no faults in the load sense system.

Functions may be disabled by the machine control system. Please first make sure that the machine is on a firm level surface, the charger is not plugged in, and check for any messages or codes displayed. Refer to section 5.8-14 Skycoded A error codes.

1.	Battery cables loose/disconnected.	**Tighten or connect battery cables.**
2.	Battery discharged or defective.	**Charge battery or replace if defective.**
3.	Fuse F1 defective or open.	**Replace fuse.**
4.	Loose or broken B+ cable 03 from batteries to battery disconnect switch S1.	**Check continuity. Replace if defective.**
5.	Open or defective battery disconnect switch S1.	**Close switch. Replace if defective.**
6.	Loose or broken wire #03A from battery disconnect switch S1 to motor contactor C1 common.	**Check continuity. Replace if defective.**
7.	Loose or broken wire #03A from motor contactor C1 to circuit breaker CB1.	**Check continuity. Replace if defective.**
8.	Circuit breaker CB1 tripped or defective.	**Reset breaker, check for defective wiring. Replace if defective.**
9.	Loose or broken wire #05 from circuit breaker CB1 to base emergency stop switch S28.	**Check continuity. Replace if defective.**
10.	Open or defective base emergency stop switch S28.	**Close switch. Replace if defective.**
11.	Loose or broken wire #05A from base emergency stop switch S28 to base key switch S10.	**Check continuity. Replace if defective.**
12.	Loose or broken #05A wires between base key switch S10 terminals.	**Check continuity. Replace if defective.**
13.	Open or defective key select switch S10.	**Close switch. Replace if defective.**
14.	Loose or broken wire #08C from base key switch S10 to motor contactor C1 coil +.	**Check continuity. Replace if defective.**
15.	Loose or broken wire #08C from motor contactor C1 coil + to machine controller pin A3.	**Check continuity. Replace if defective.**

16. Loose or broken wire 07 from base key switch to machine controller pin B12.	**Check continuity. Replace if defective.**
17. Loose or broken wire 07 from base key switch to upper control box E-Stop switch S4.	**Check continuity. Replace if defective.**
18. Open or defective upper controll box E-stop switch S4.	**Close switch. Replace if defective.**
19. Loose or broken wire 08 from upper control box E-Stop switch S4 tomachine controller pin A7.	**Check continuity. Replace if defective.**
20. Loose or broken wire 00 from machine controller B- to battery negative.	**Check continuity. Replace if defective.**
21. Loose or broken wire #08C from base key switch S10 to upper control box joystick pin P-16 and/or service position position limit switch LS3.	**Check continuity. Replace if defective.**
22. Misadjusted or defective service position position limit switch LS3.	**Adjust switch. Replace if defective.**
23. Loose or broken wire 51 from service position position limit switch LS3 to control box joystick pin P-18.	**Check continuity. Replace if defective.**

4.2-2 No Lift or Steer Functions

1. Loose or broken wire 19 from motor contactor C1 coil negative to machine controller pin A27.	**Check continuity. Replace if defective.**
2. Loose or broken wire 03B from motor contactor C1N.O. contact to machine controller B+.	**Check continuity. Replace if defective.**
3. Loose or broken wire 03B from machine controller B+ to pump motor positive terminal	**Check continuity. Replace if defective.**
4. Loose or broken ground wirefrom machine controller P- to pump motor negative terminal..	**Check continuity. Replace if defective.**
5. Loose or broken wire 03B from motor contactor C1N.O. contact to circuit breaker CB2	**Check continuity. Replace if defective.**
6. Defective or tripped circuit breaker CB2.	**Check for short circuits, Reset circuit breaker. Replace breaker if defective.**
7. Loose or broken wire 03C from circuit breaker CB2 to machine controller pin B19.	**Check continuity. Replace if defective.**
8. Loose or broken wire 03C from circuit breaker CB2 to lift (3H-14), right steer (4H-23) and left steer (4H-24) coils.	**Check continuity. Replace if defective.**

4.2-3 No Lift from Base or Platform

1. Loose or broken wire 14 from lift coil 3H-14 to machine controller pin A25.	**Check continuity. Replace if defective.**
2. Defective coil 3H-14.	**Replace coil.**

4.2-4 No Lower from Base or Platform

1. Loose or broken wire 13 from lower coil 2H-13 to machine controller pin A29.	**Check continuity. Replace if defective.**
2. Loose or broken wire 00C from lower coil 2H-13 to machine controller pin A26.	**Check continuity. Replace if defective.**
3. Defective coil 2H-13.	**Replace coil.**

4.2-5 No Lift from Base Controls

1. Loose or broken wire 10 from base key switch S10 to lift/lower switch S2.	**Check continuity. Replace if defective.**
2. Open or defective key select switch S10.	**Close switch. Replace if defective.**
3. Loose or broken wire 10 from base key switch S10 to machine controller pin B7.	**Check continuity. Replace if defective.**
4. Loose or broken wire 14A from lift/lower switch S2 to machine controller pin B2.	**Check continuity. Replace if defective.**
5. Open or defective lift/lower switch S2.	**Close switch. Replace if defective.**

4.2-6 No Lower from Base Controls

1. Loose or broken wire 13A from lift/lower switch S2 to machine controller pin B6.	**Check continuity. Replace if defective.**
2. Open or defective lift/lower switch S2.	**Close switch. Replace if defective.**

4.2-7 No Functions from Platform controls

1. Loose or broken 08 wire from E-stop switch S4 to lift/off/drive switch S3.	**Check continuity. Replace if defective.**
2. Loose or broken 08 wire from E-stop switch S4 Joystick pin P-17.	**Check continuity. Replace if defective.**
3. Defective enable switch or wiring on upper contol joystick.	**Check wiring and switch. Repair or replace if defective.**
4. Defective ground wire 00 from machine controller pin P-32 to B-.	**Check continuity. Replace if defective.**
5. Defective Joystick.	**Replace if defective.**

4.2-8 No Lift/Lower from Platforms Controls

1. Loose or broken 09 wire from lift/off/drive switch S3 to joystick pin P-23.	**Check continuity. Replace if defective.**
2. Open or defectivelift/off/drive switch S3.	**Close switch. Replace if defective.**

4.2-9 No Steer Left

1. Loose or broken wire 24 from steer coil 4H-24 to machine controller pin A1.	**Check continuity. Replace if defective.**
2. Defective coil 4H-24.	**Replace coil.**
3. Defective left steer switch or wiring on upper contol joystick.	**Check wiring and switch. Repair or replace if defective.**

4.2-10 No Steer Right

1. Loose or broken wire 23 from steer coil 4H-23 to machine controller pin A24.	**Check continuity. Replace if defective.**
2. Defective coil 4H-23	**Replace coil.**
3. Defective right steer switch or wiring on upper contol joystick.	**Check wiring and switch. Repair or replace if defective.**

4.2-11 No Drive

1. Loose or broken 12 wire from lift/off/drive switch S3 to joystick pin P-07.	**Check continuity. Replace if defective.**
2. Open or defectivelift/off/drive switch S3.	**Close switch. Replace if defective.**
3. Loose or broken 05A wire from base E-stop S28 to to 30ACR brake relay pin 30 and/or pin 86.	**Check continuity. Replace if defective.**
4. Loose or broken 30A wire from 30ACR brake relay pin 85 to machine controller pin B-22.	**Check continuity. Replace if defective.**
5. Defective 30ACR brake relay.	**Check relayReplace if defective.**
6. Loose or broken 05B from diode D05B to brake BK1 pin P7-1 and/or BK2pin P9-1.	**Check continuity. Replace if defective.**
7. Loose or broken wire 30L from BK2 pin P9-2 to machine controller pin A30.	**Check continuity. Replace if defective.**
8. Loose or broken wire 30R from BK1 pin P7-2 to machine controller pin A28.	**Check continuity. Replace if defective.**
9. Defective brake BK1 or BK2.	**Check brakes. Replace if defective.**
10. Loose or defective wiring from machine controller pins WS, VS, and/or US to left traction motor.	**Check continuity. Replace if defective.**
11. Loose or defective wiring from machine controller pins WM, VM, and/or UM to right traction motor.	**Check continuity. Replace if defective.**
12. Defective traction motor.	**Check Motors. Replace if defective.**

4.3 Hydraulic System

4.3-1 All Hydraulic Controls Inoperative (No Lift or Steer functions)

1. Pump motor not engaged.	**Refer to Electrical troubleshooting. Replace pump motor if defective.**
2. Pump motor coupler defective.	**Check coupler. Replace if defective.**
3. Defective pump P1.	**Check pump output. Replace if defective.**
4. System relief valve RV1 set too low or stuck open.	**Check and adjust valve setting. Replace if defective.**

4.3-2 No Lift Function

1. Check valve CV1 stuck closed.	**Clean valve. Check O-rings on valve. Check operation of valve. Repair or replace valve as required.**
2. Stuck or defective lift valve 3H-14.	**Clean valve. Check O-rings on valve. Check operation of valve. Repair or replace valve as required.**
3. Defective lift Cylinder assembly.	**Check cylinders. Repair or replace as required.**
4. Stuck or defective RV1.	**Adjust or replace if defective.**

4.3-3 No Lower Function

1. Stuck or defective lift valve 3H-14.	**Clean valve. Check O-rings on valve. Check operation of valve. Repair or replace valve as required.**
2. Stuck or defective lower valve 2H-13.	**Clean valve. Check O-rings on valve. Check operation of valve. Repair or replace valve as required.**
3. Blocked lower orifice OR1.	**Check orifice. Clean or replace as required.**
4. Defective lift cylinder assembly	**Check cylinders. Repair or replace as required.**

4.3-4 No Steer Left and/or Right

1. Stuck or defective steer valve 4H-23/4H-24.	**Clean valve. Check O-rings on valve. Check operation of valve. Repair or replace valve as required.**
2. Steer crossover relief valve RV2 set too low or stuck open.	**Check and adjust valve setting. Replace if defective.**
3. Steer cylinder C5 bypassing, or mechanically binding.	**Check cylinder and all steer linkage. Repair or replace defective componants as required.**
4. Stuck or defective RV1.	**Adjust or replace if defective.**

Notes

Section 5 – Procedures

NOTE

The illustrations in this manual are for instructional purposes only.The models and components shown may appear somewhat different from those on your actual MEWP.

5.1 Safety and Workmanship

Your safety, and that of others, is the first consideration when doing maintenance on equipment. Always be conscious of weight. Never attempt to move heavy parts without the aid of a mechanical device. Do not allow heavy objects to rest in an unstable position. When you raise a part of the equipment, make sure it has sufficient support.

Unless specifically noted otherwise, before beginning any procedure:

1. Park the MEWP on a firm, level surface.
2. Lower the platform util the MEWP is in the stowed position.
3. Push in the emergency stop buttons on the base controls and on the platform controls.
4. Turn the off/platform/base key switch to the off position. Remove the key.
5. Turn the main power disconnect switch to the off position.

After you complete a procedure which involves the modification, adjustment, or replacement of a hydraulic or electrical component, do all of the function tests given in your unit's Operation Manual.

⚠ WARNING

Fall hazard. Use the three points of contact principle when you use the MEWP to enter or exit the platform. If you do not obey, there is a risk of death or serious injury.

⚠ WARNING

Do not operate the platform controls without the correct fall protection attached to the designated location in the platform.Failure to do so could result in death or serious injury!

⚠ WARNING

Make sure there are no people or obstructions in the test area, and there is sufficient space for the mast and drive functions required for the given procedures.

5.1-1 Diagnostic Switch

When the platform is in the service position with the deck fully extended, the control functions are disabled (lift/lower, drive/steer).All other electrical signals and components remain on in the service position.

Hold the diagnostic switch ❶ up to enable the control functions for troubleshooting purposes.

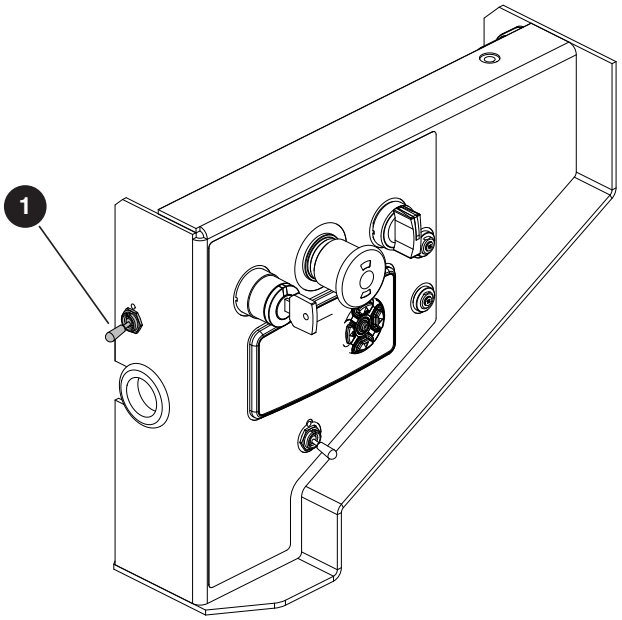

5.2 Platform

5.2-1 Remove the Platform

1. Disconnect the platform control cable from the mast electrical housing.

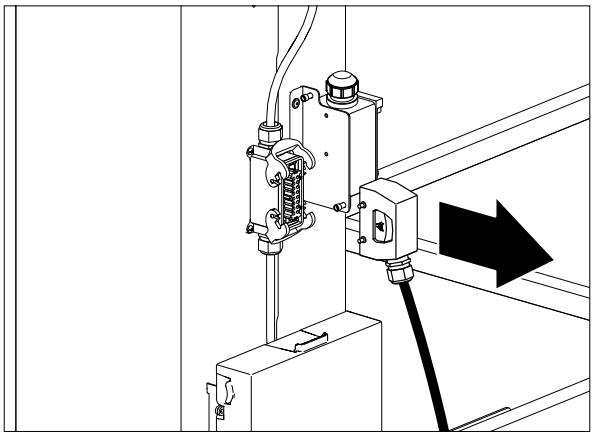

2. Loosen the strain relief at the bottom of the housing.
3. Use a screwdriver to open the housing so you can see the wire connections.
4. Make note of where the limit switch wires are connected inside the mast electrical housing. Disconnect the limit switch wires from the mast electrical housing.
5. Pull the limit switch wires out.

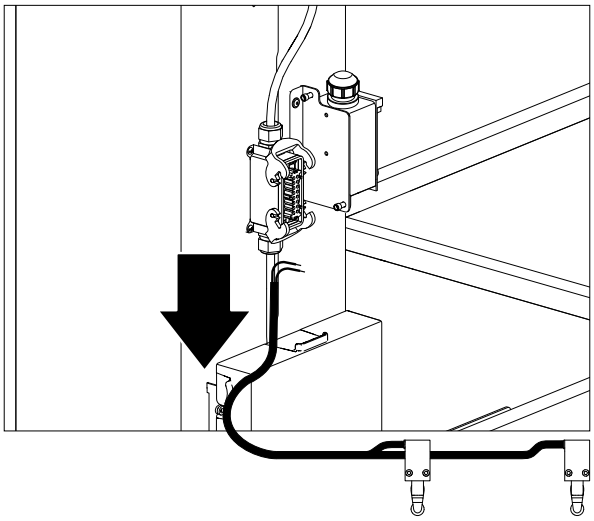

6. Use tie wraps to attach the platform control cable and limit switch cable to the platform railing.

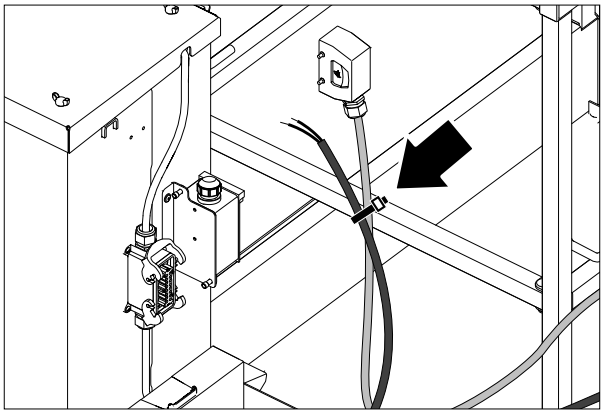

7. Remove and set aside the three bolts that secure the traverse platform to the front rollers on each side.

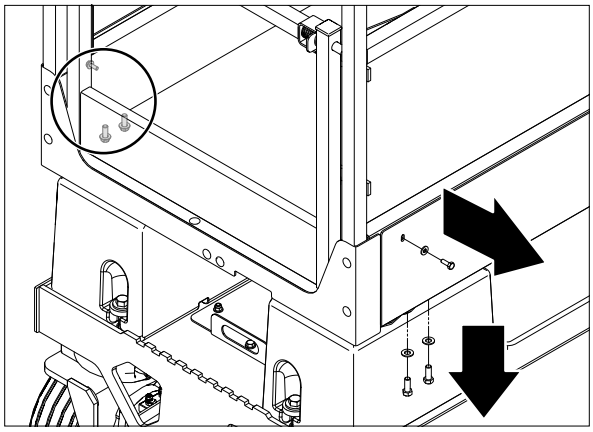

8. Extend the platform a little so you can access the front rollers.
9. Remove and set aside the two front rollers.

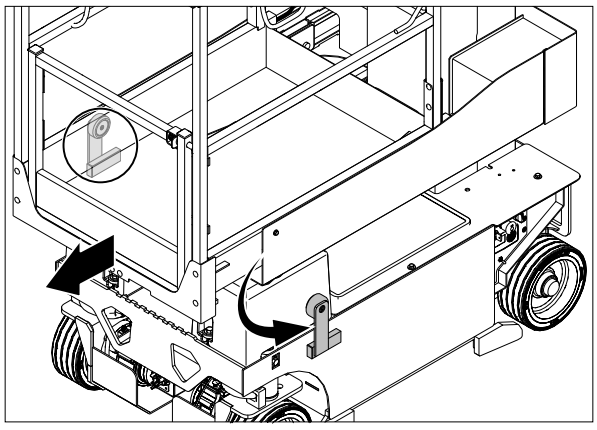

10. Use a suitably rated lifting device to pull the platform out fully.Set it aside on a protective surface.

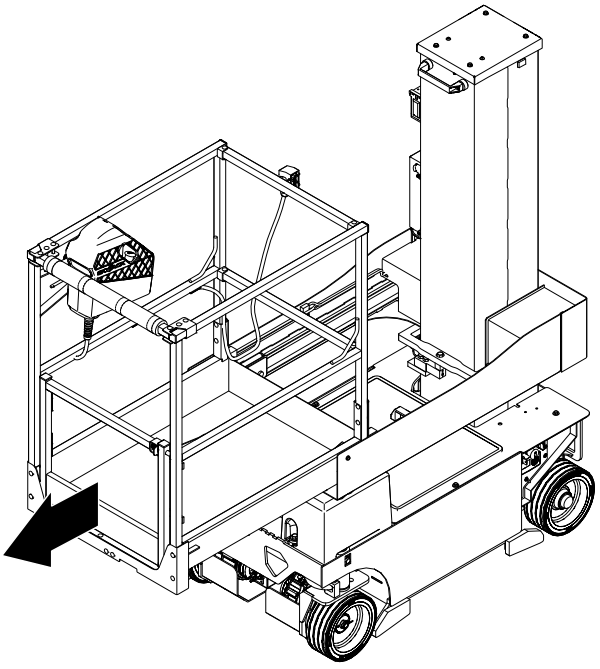

11. Disconnect the mast cable from the junction box cable.

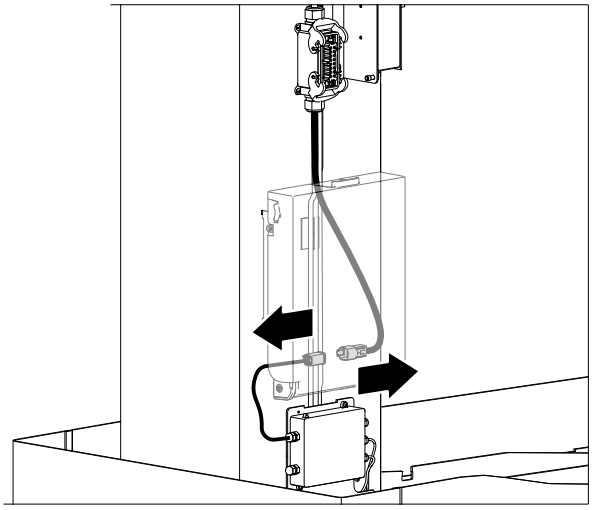

12. Remove the bolts and nuts that secure the lower platform to the mast.

13. Make sure the load cells stay attached to the mast.

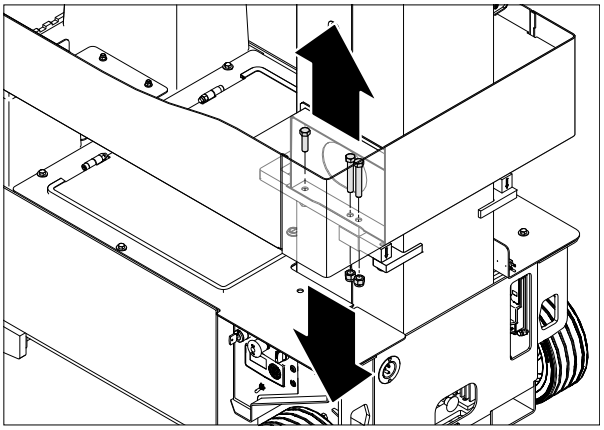

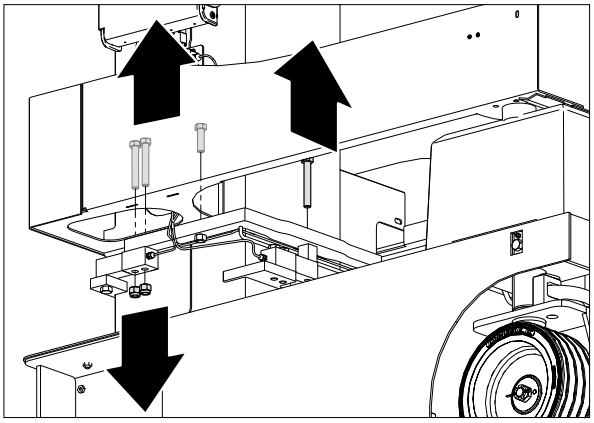

14. Remove and set aside the hardware from the junction box.

15. Put the junction box on the chassis.

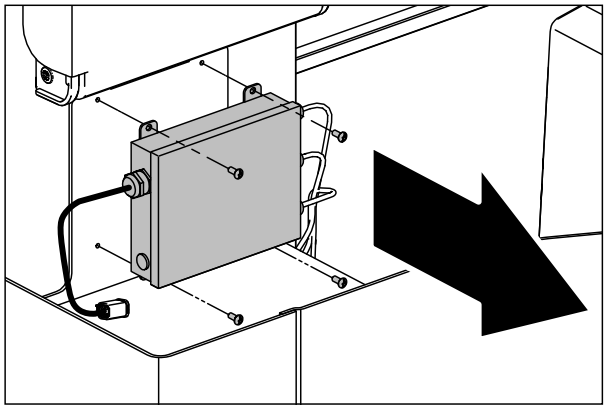

16. Tilt the lower platform backwards.
17. Use an appropriate lifting device or a second person to help remove the lower platform.

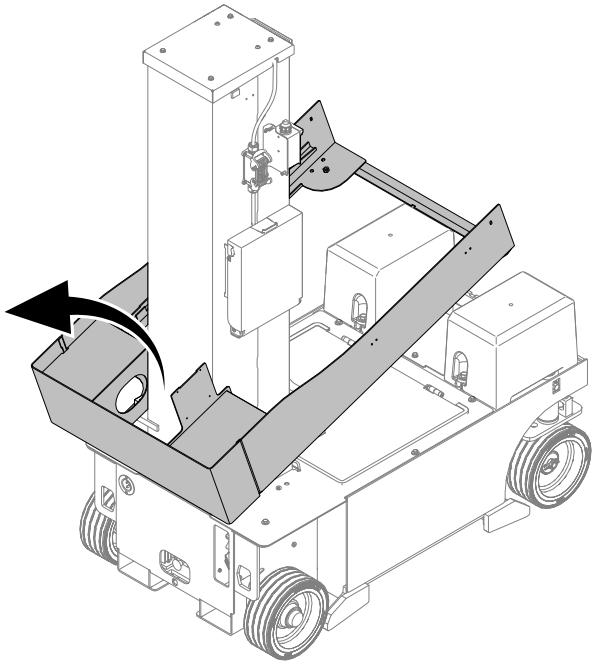

18. Remove and set aside the link weldment, washer and spacer from the load cells.

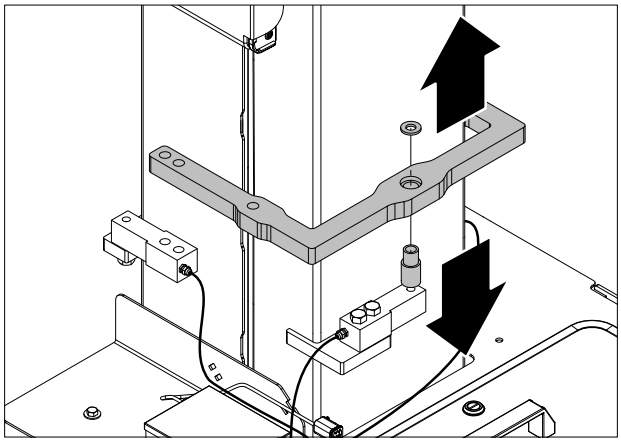

5.2-2 Replace the Load Cells

1. Remove the platform. Refer to section *5.2-1 Remove the Platform*.
2. Remove and set aside the bolts, washers and spacers from the three load cells.

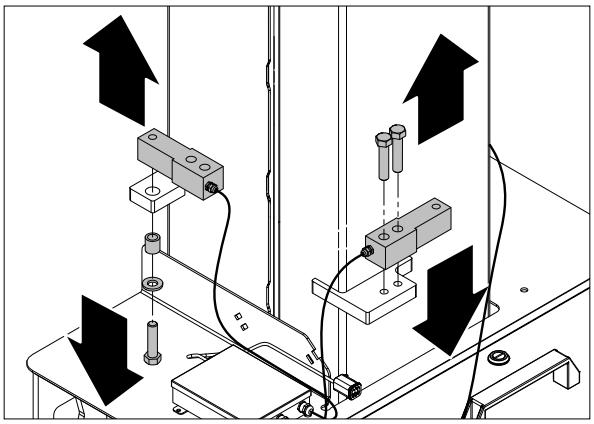

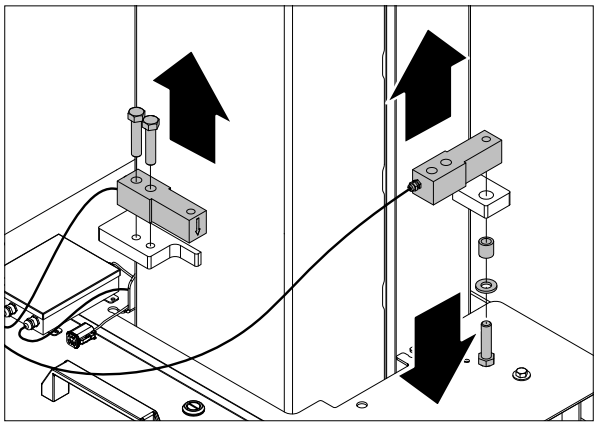

3. Discard the old load cells and junction box assembly.

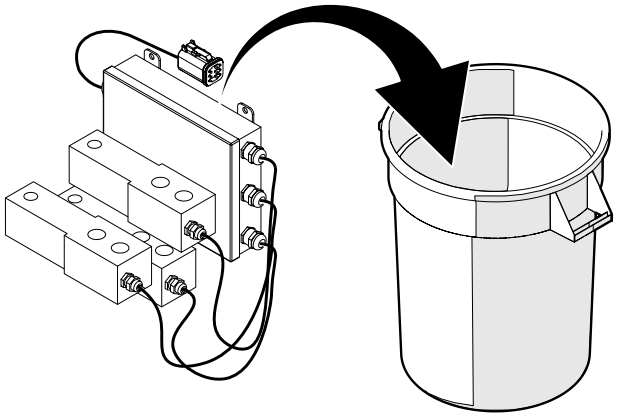

4. Get the new load cells. The load cells are marked “RIGHT,” “LEFT,” and “FRONT.” Make sure they are installed in the correct positions. Also make sure the arrows on the load cells are pointing down when they are installed.

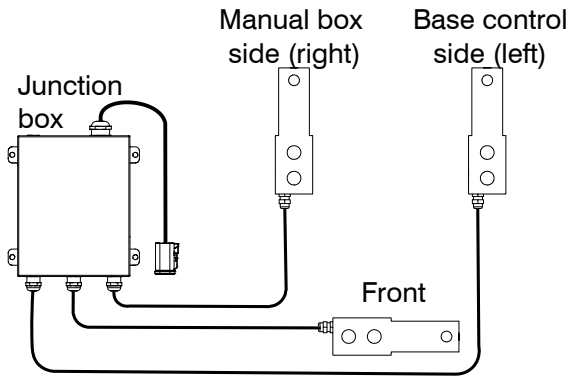

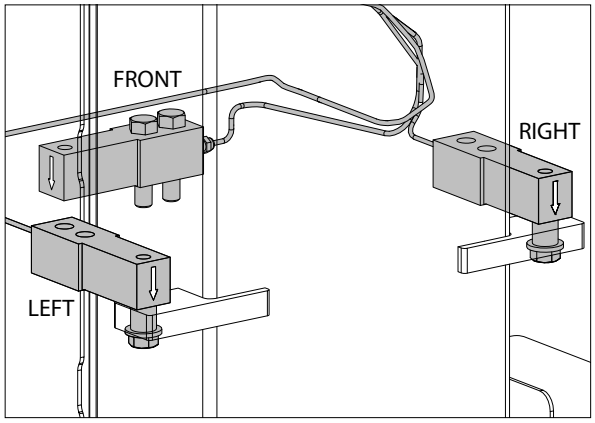

5. Mount the manual box and control box load cells onto the mast using the bolts, washers and spacers removed earlier.Use blue thread locker and torque the bolts to 122 Nm (90 ft-lb).

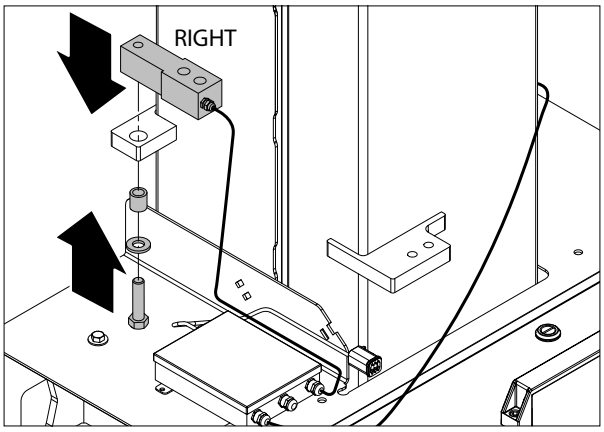

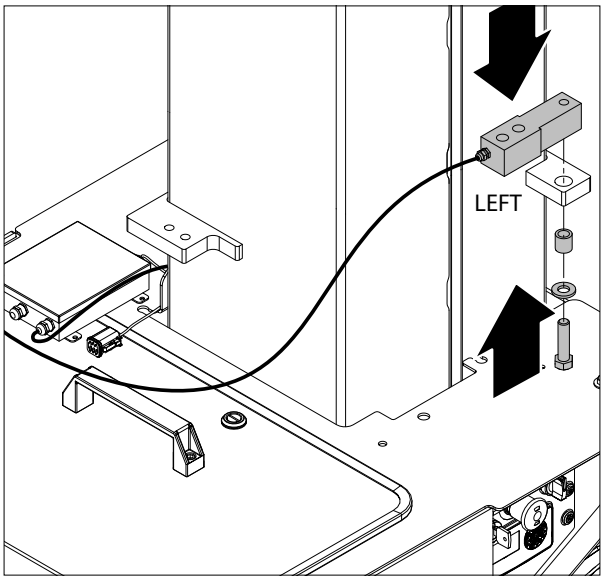

6. Mount the front load cell onto the mast using the bolts removed earlier.Use blue thread locker and torque the bolts to 122 Nm (90 ft-lb).

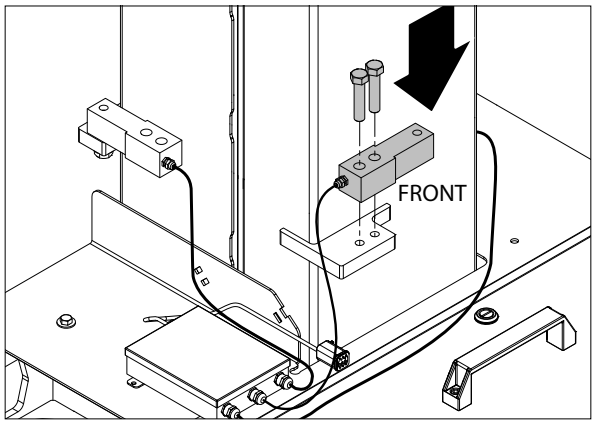

7. Install the platform. Refer to section *5.2-3 Install the Platform*.

5.2-3 Install the Platform

1. Install the link weldment, washer and spacer onto the load cells.

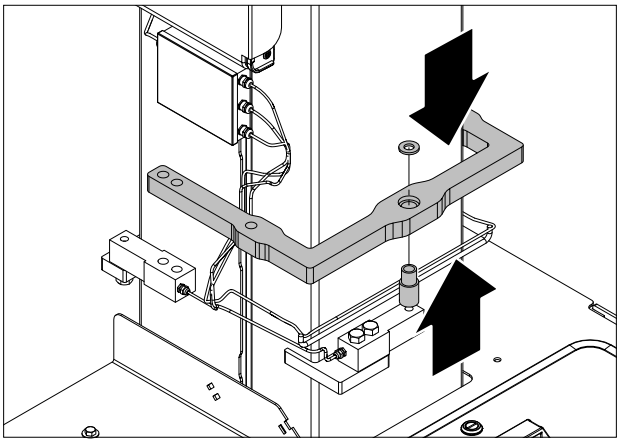

2. Use an appropriate lifting device or a second person to help install the lower platform.
3. Tilt the platform towards the chassis.

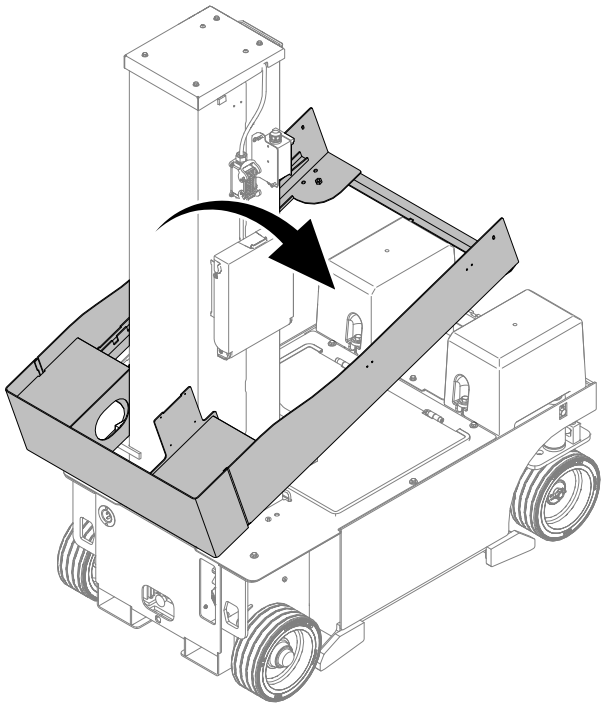

4. Use the screws removed earlier to secure the junction box to the lower platform.

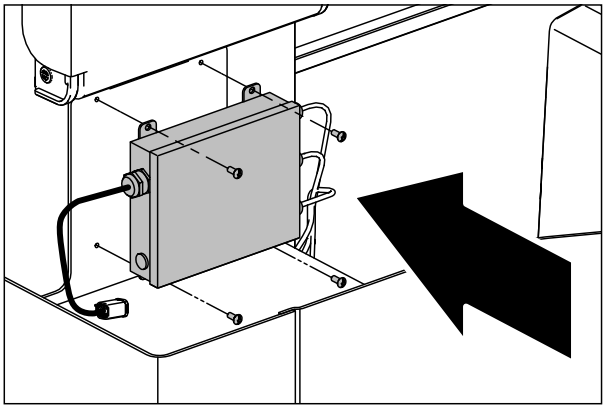

5. Use the bolts and nuts removed earlier to secure the lower platform to the mast load cells.

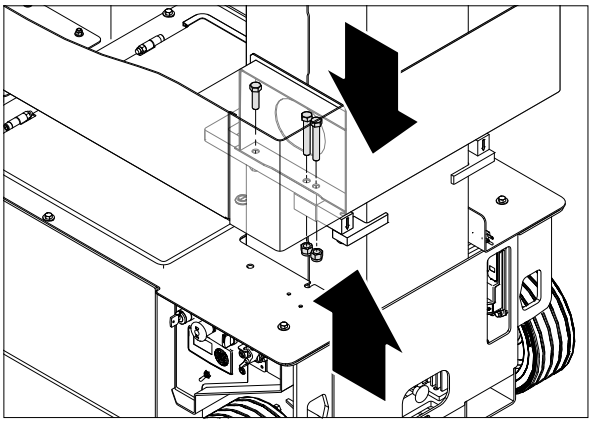

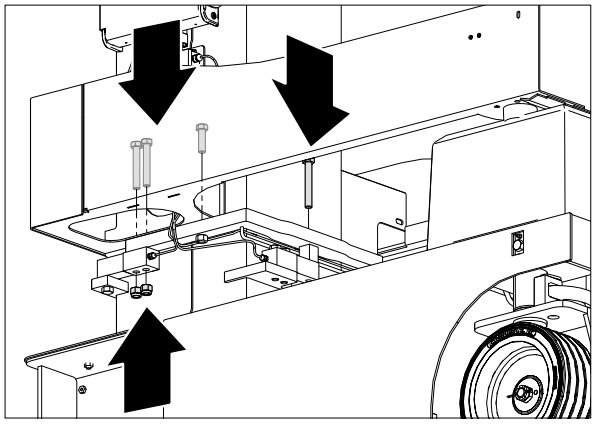

6. Connect the junction box connector to the mast electrical connector.

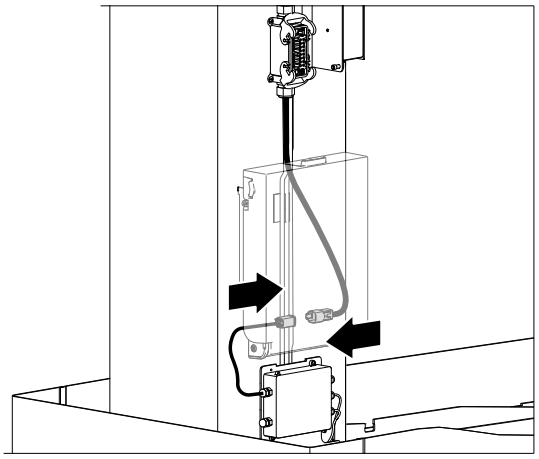

7. Install the traverse platform onto the lower platform. Do not push the platform all the way in yet.

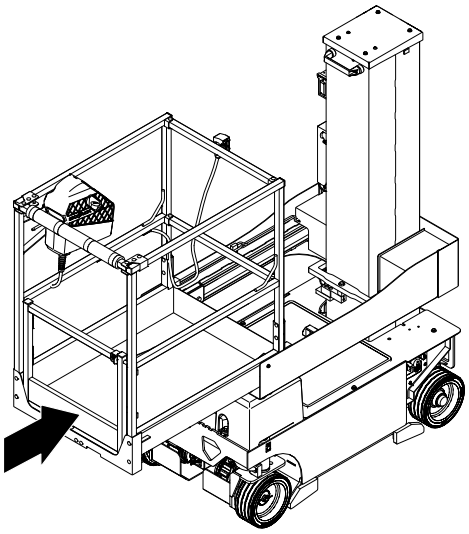

8. Insert the front rollers between the traverse platform and the lower platform.

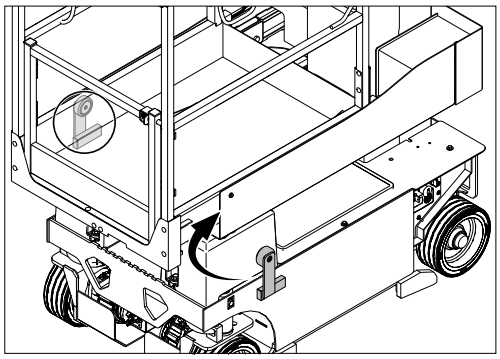

9. Use the bolts and washers removed earlier to secure the front rollers.
10. Push the platform in all the way.

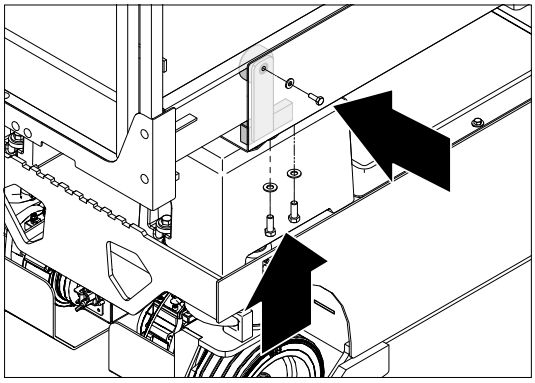

11. Use a screwdriver to open the mast electrical housing so you can see the wire connections.
12. Connect the limit switch wires to the mast electrical housing. Refer to section *3.12 Base Limit Switch* for the correct wire connections.

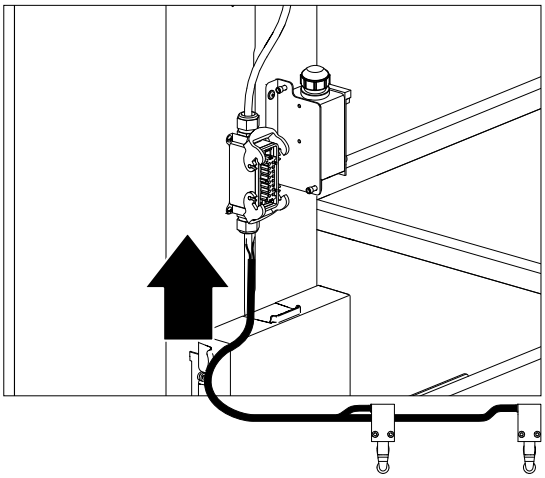

13. Connect the platform control cable to the mast electrical housing.

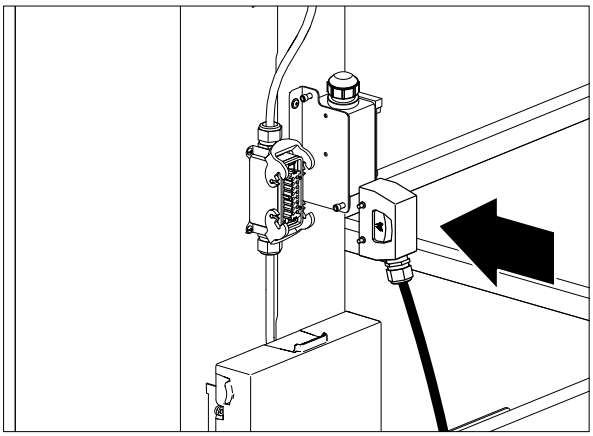

5.2-4 Joystick 32-Pin Connector Chart

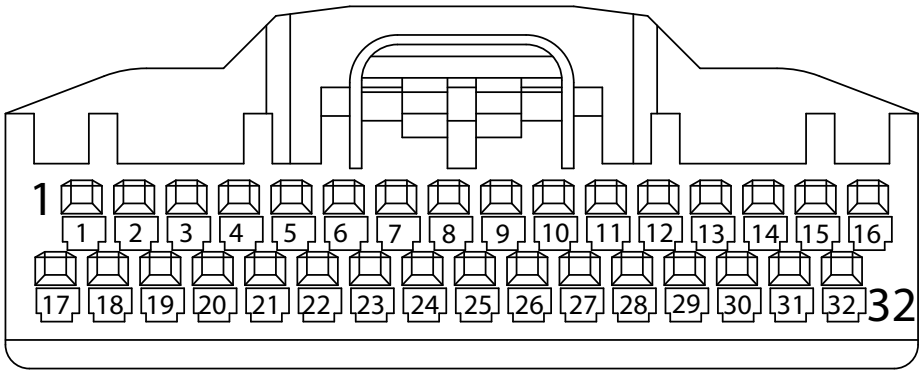

Plug	Pin #	Wire # and Colour	Wire Function
	P1-6		Not used
	P7	12 Brown/Red	24V Input from S3 Lift/Off/Drive switch for Drive Select
	P8	49 Green	24V Input from S8 Horn
	P9-14		Not used
	P15	60 Black/Red/Green	24V reference Output (pulsed) for PL-1 Power On LED of S4 Emergency Stop switch
	P16	08C Purple/White	24V Input B+ from S10 Key switch in Platform mode select
	P17	08 Purple/White	24V Input B+ from S4 Emergency Stop switch for power on
	P18	51 Black/Green	24V Input from LS3 Limit switch for Deck in Service position (OFF when Extended)
	P19-21		Not used
	P22	120 Black	24V Input from S7 Indoor/Outdoor switch option (ON when Outdoor mode)
	P23	09 Orange	24V Input from S3 Lift/Off/Drive switch for Lift Select
	P24	12A Grey/Orange	24V Input from LS4 Limit switch for Deck Extended (OFF when Extended)
	P25	82A Brown/White	12V Output for Load Cell supply
	P26	CanL Green	Communication CanL
	P27	CanH Yellow	Communication CanH
	P28-29		Not used
	P30	120A Black	Spare(Not used)
	P32	00 White	0V reference Ground B-
			Enable Trigger, Steer Left, and Steer Right are done with BIT functions (byte 1)

5.3 Mast

⚠ CAUTION

Risk of personal injury or equipment damage. Always use suitable lifting equipment and safe lifting practices when performing the following procedure.

⚠ WARNING

Risk of personal injury. Do not stand or pass under a suspended load.

5.3-1 Lubricate the Mast

1. Use the base controls to fully extend the mast.
2. Turn the main disconnect switch to the off position.
3. Clean the existing lubricant off of the sides of the vertical mast.
4. Apply DuPont Multi-Use Lubricant (**158692**), or any PTFE wax-based dry lubricant, in a 38 mm (1-1/2”) wide strip along the outside corners of each mast section. Do not apply lubricant to the topmost outer mast.
5. Wait 10 minutes for the lubricant to dry.
6. Use the base controls to retract the mast.

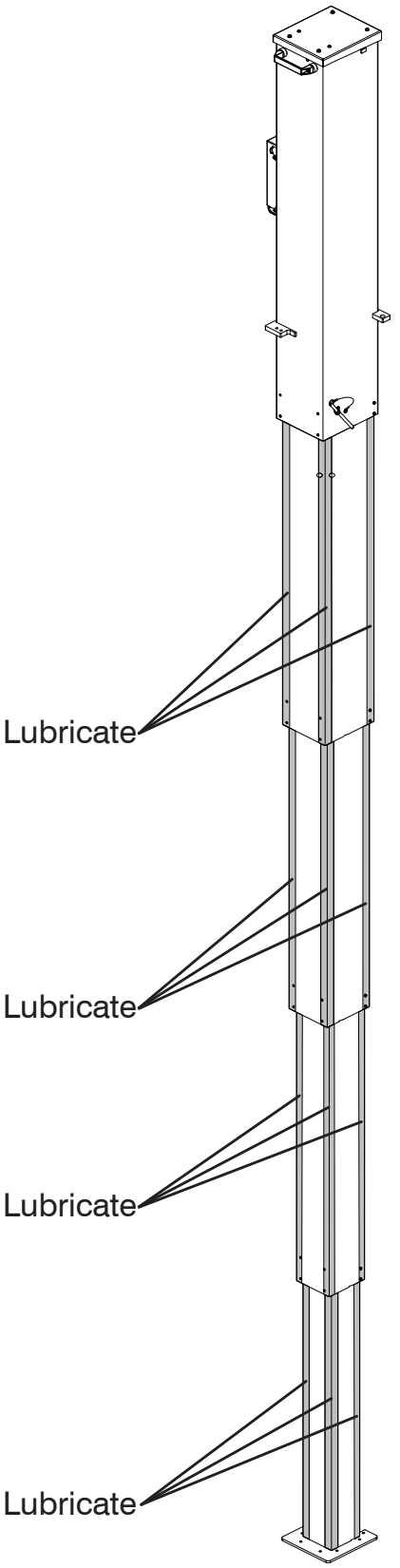

5.3-2 Remove the Lift Cylinder

1. Disconnect the harness from the emergency lowering valve coil at the bottom of the lift cylinder.

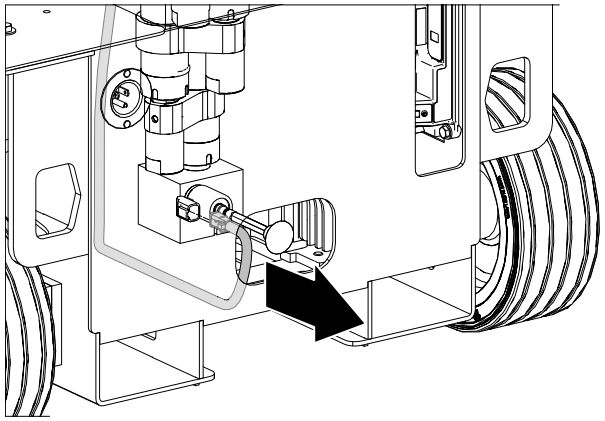

2. Disconnect the hydraulic hose from the bottom of the emergency lowering valve manifold. Cap or plug the hose and the hydraulic fitting.

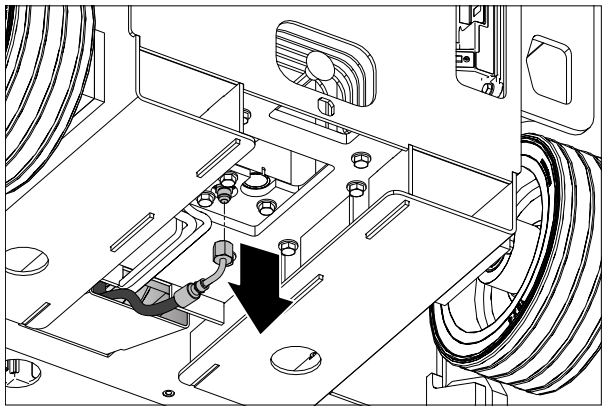

3. Remove and set aside the hardware that secures the lift cylinder to the bottom of the chassis.

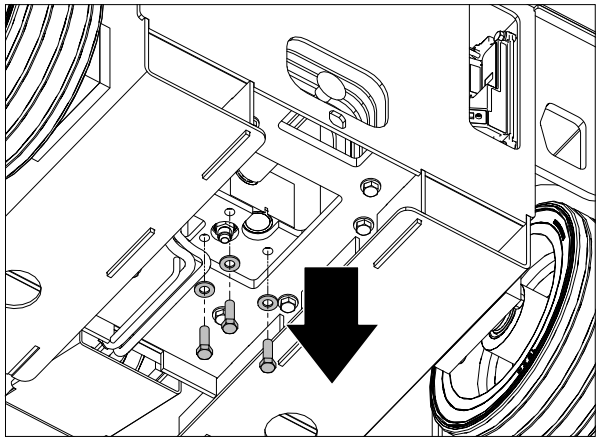

4. Remove and set aside the red knob and hex standoff from the emergency lowering valve. Hold the valve shaft with a wrench to keep it from turning when you remove the hex standoff.

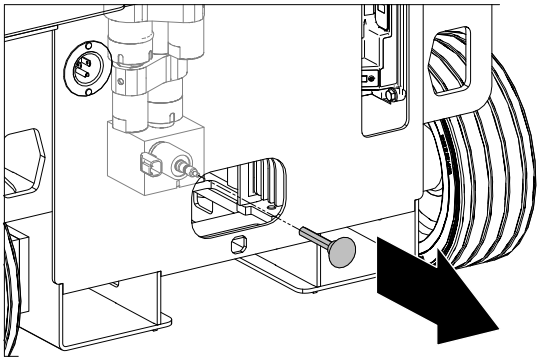

5. Remove and set aside the mast cover and hardware.

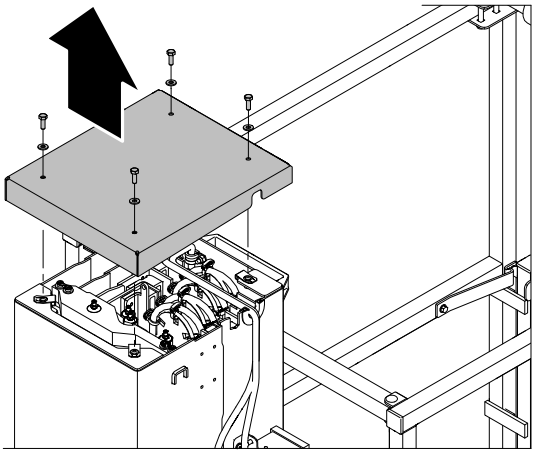

6. Remove and set aside the bolts and washers that secure each lift cylinder section to each mast.

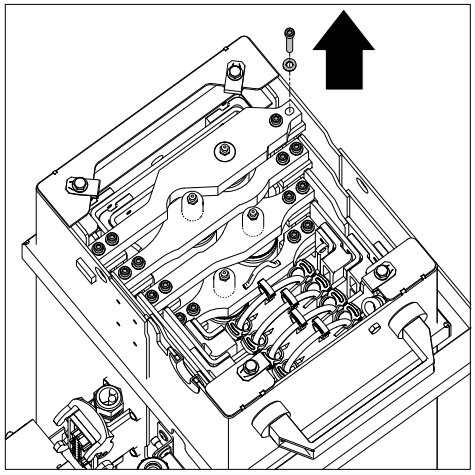

7. Use lifting straps to lift the lift cylinder out of the mast.
8. Set the lift cylinder aside on a protective surface.

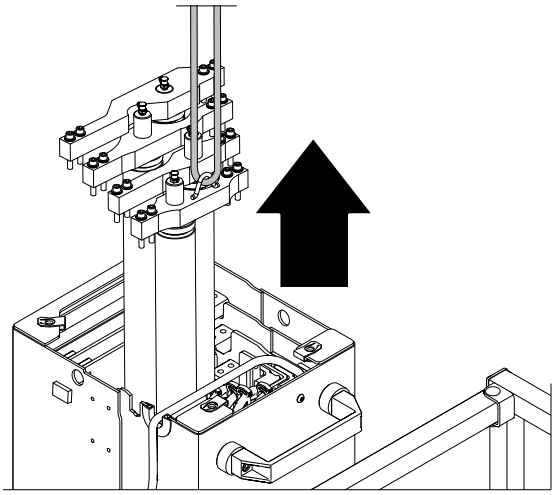

5.3-3 Install the Lift Cylinder

1. Use lifting straps to lift the cylinder and insert it into the mast. Make sure the emergency lowering valve coil faces the rear of the machine.

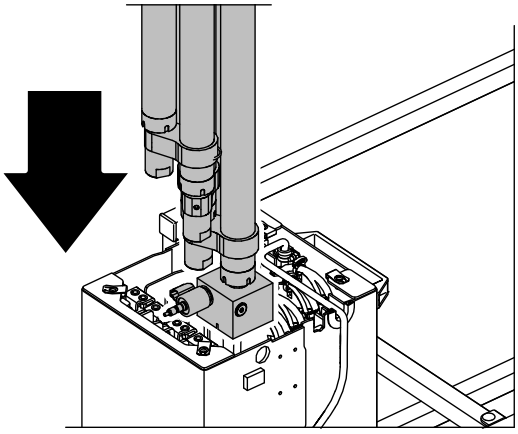

2. Use the bolts and washers removed earlier to secure the lift cylinder to the bottom of the chassis.

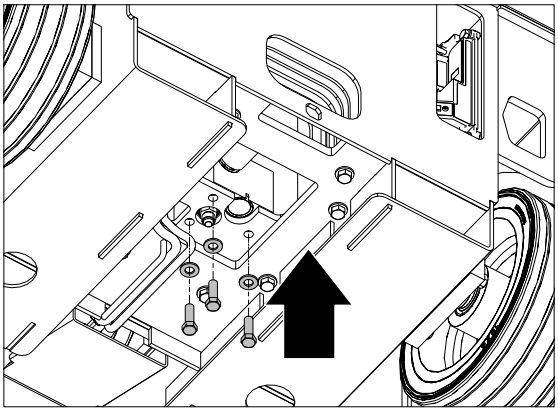

3. Connect the hydraulic hose to the emergency lowering valve manifold.

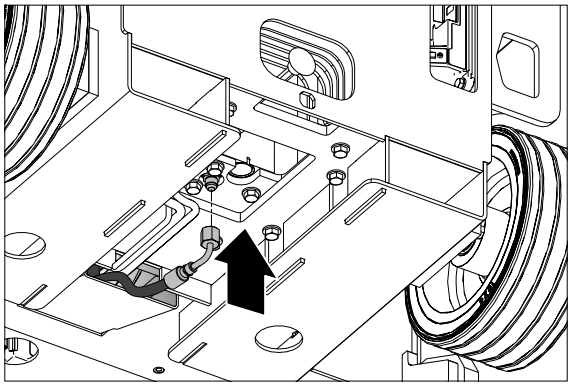

4. Install the hex standoff and red knob on the emergency lowering valve.Hold the valve shaft with a wrench to keep it from turning when you install and tighten the hex standoff.

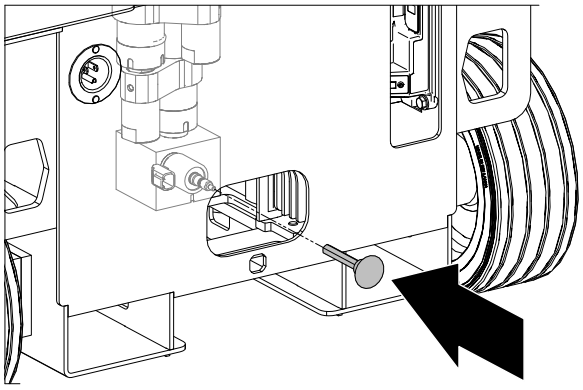

5. Connect the electrical harness to the emergency lowering valve coil.

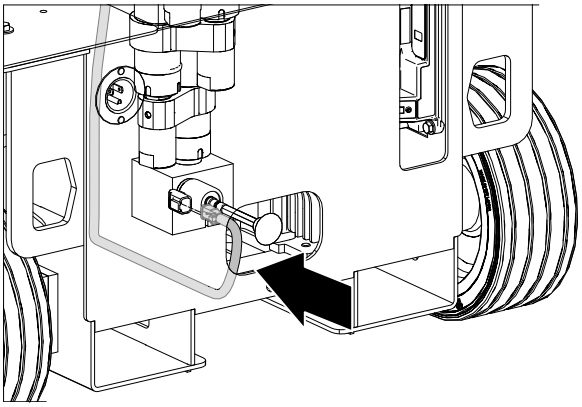

6. Use the bolts and washers removed earlier to secure the lift cylinder to the masts.Start with the innermost mast and progress to the outermost mast.

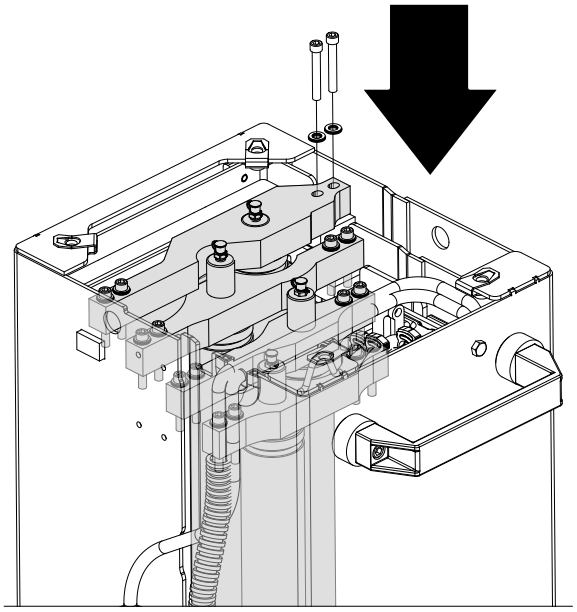

7. Put the mast cover on top of the mast.
8. Fasten it in place with the hardware removed earlier.

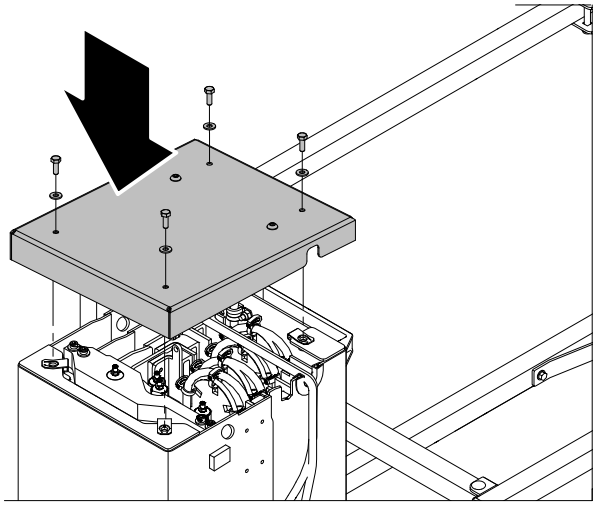

5.3-4 Remove the Mast and Lift Cylinder Together

1. Remove the platform and set it aside on a protective surface. Refer to section *5.2-1 Remove the Platform*.
2. Use a sling to secure the junction box to the manual box bracket. Make sure the junction box does not hang from the load cell wires when the mast assembly is removed later.

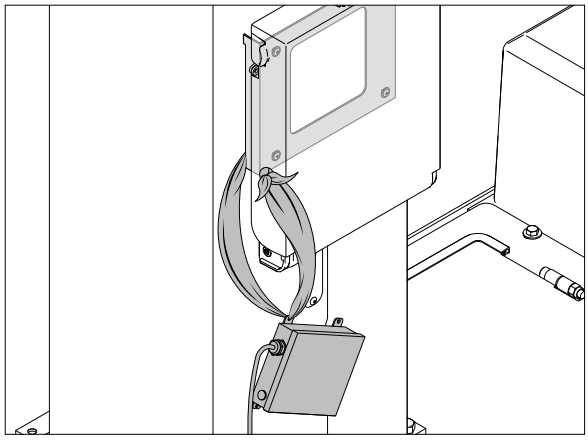

3. Open the service compartment access door.
4. Disconnect the mast cable from the main harness.
5. Cut zip ties along the cable bundles to free the mast cable.

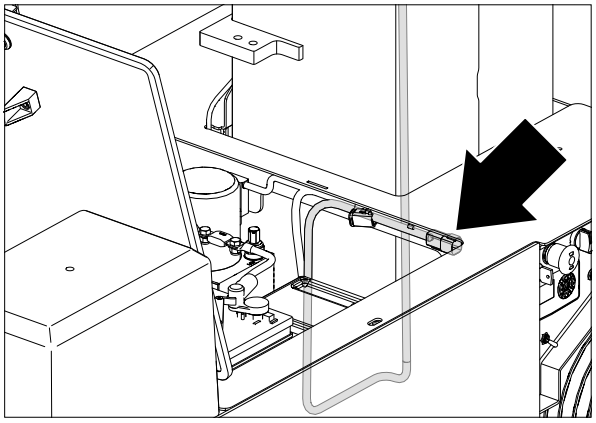

6. At the rear of the machine, drill out the rivets that secure the AC inlet to the chassis.
7. Pull out the AC inlet.
8. Disconnect the wires from the back of the AC inlet.

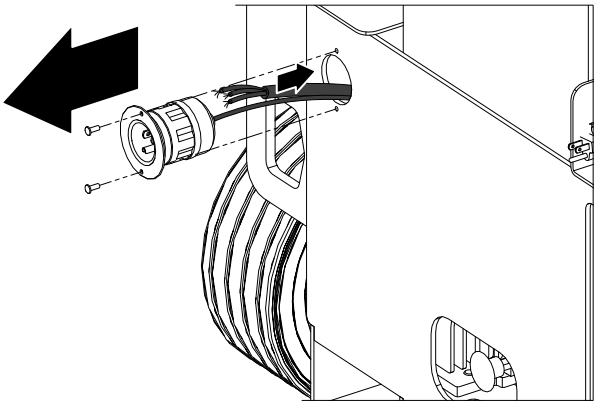

9. Remove and set aside the nut that secures the ground wire to the chassis. You may need to remove the chassis cover to access the wire.
10. Cut the tie wraps that secure the AC power cable to the cable carrier and existing cable bundles.

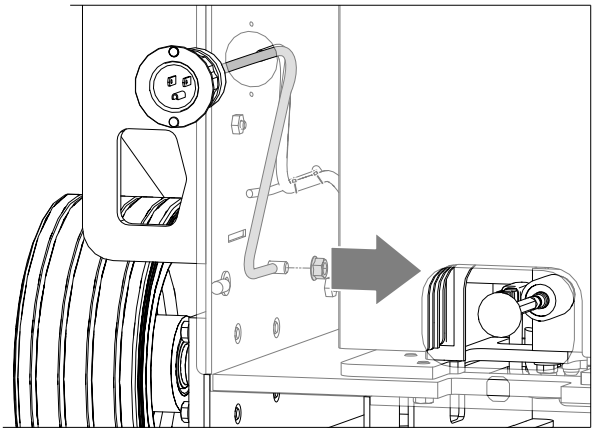

11. Remove and set aside the mast cover and hardware.

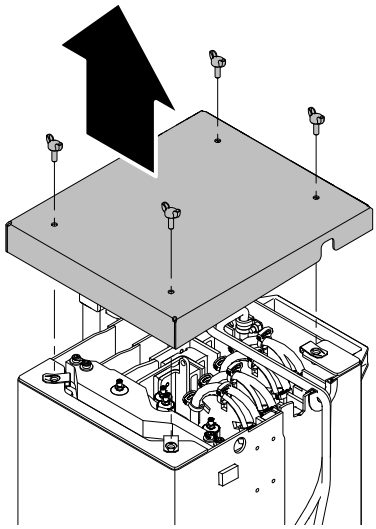

12. Disconnect the electrical cable from the holding valve coil at the bottom of the lift cylinder.

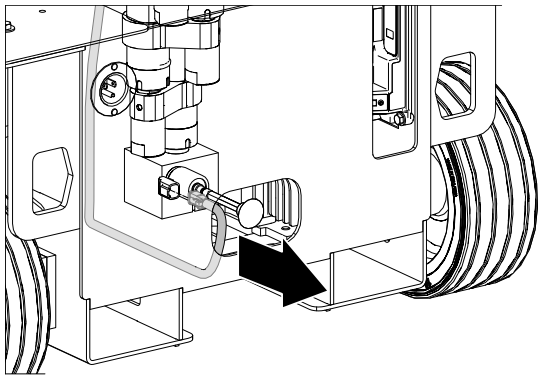

13. Disconnect the hydraulic hose from the bottom of the emergency lowering valve manifold. Cap or plug the hose end and hydraulic fitting.

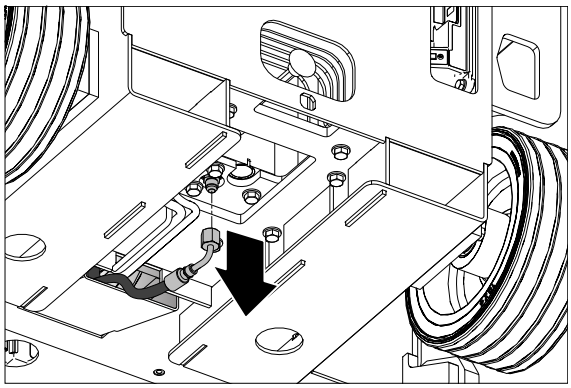

14. Remove and set aside the red knob and hex standoff from the emergency lowering valve. Hold the valve shaft with a wrench to keep it from turning when you remove the hex standoff.

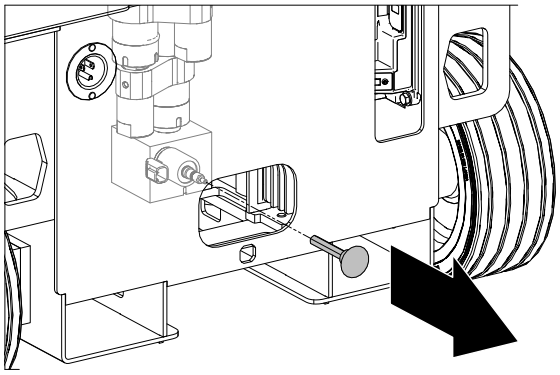

15. Remove and set aside the bolts and washers that secure the mast to the chassis.

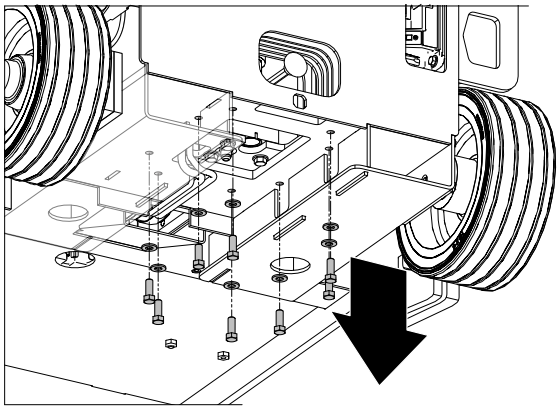

16. Attach hoist rings to opposite corners of mast 1.

17. Use lifting straps to lift the mast above the chassis.

18. Set aside the mast.

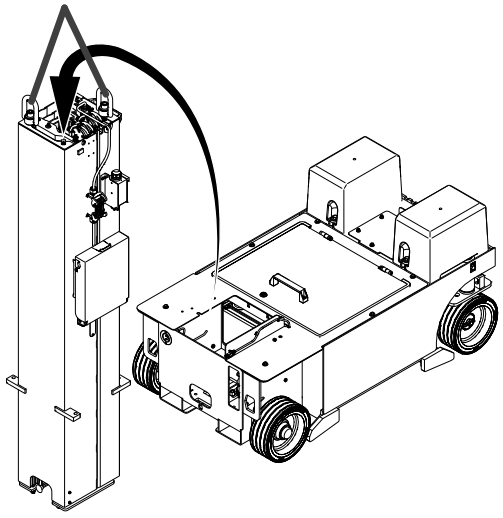

5.3-5 Install the Mast and Lift Cylinder Together

1. Use lifting straps and hoist rings to lift the mast and lift cylinder and install it onto the chassis. Make sure the holding valve coil faces the rear of the machine.

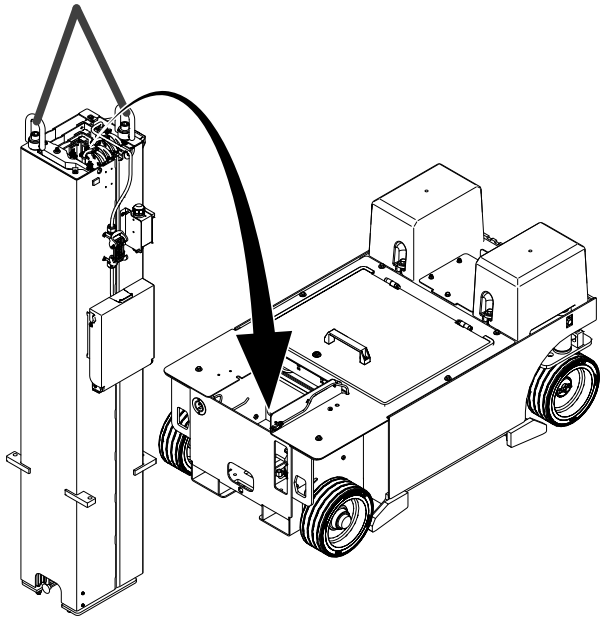

2. Use the bolts and washers removed earlier to secure the mast to the chassis.

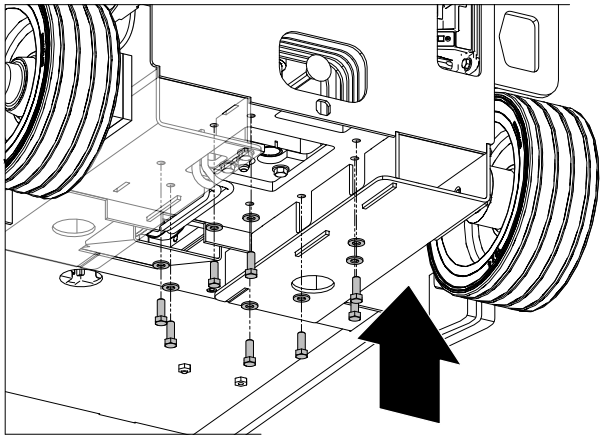

3. Connect the hydraulic hose to the holding valve fitting.

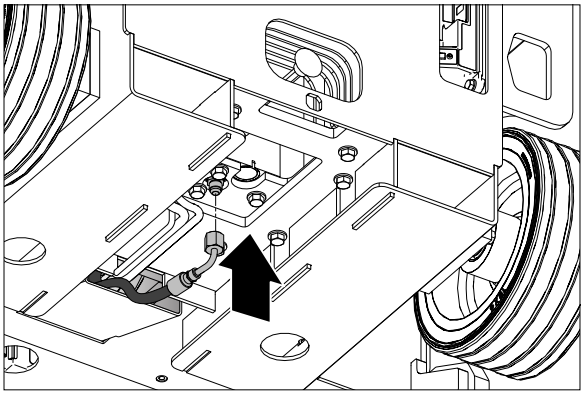

4. Install the hex standoff and red knob on the holding valve manifold.Hold the valve shaft with a wrench to keep it from turning when you install the hex standoff.

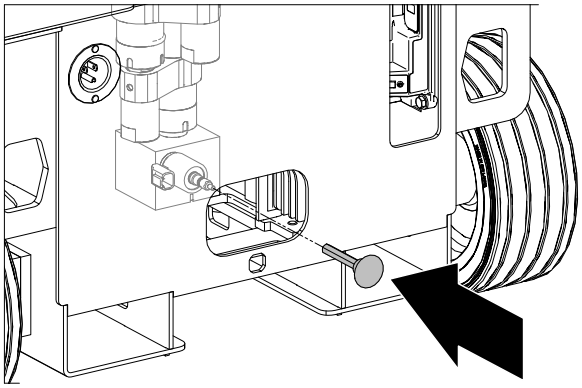

5. Connect the mast cable to the emergency lowering valve coil.

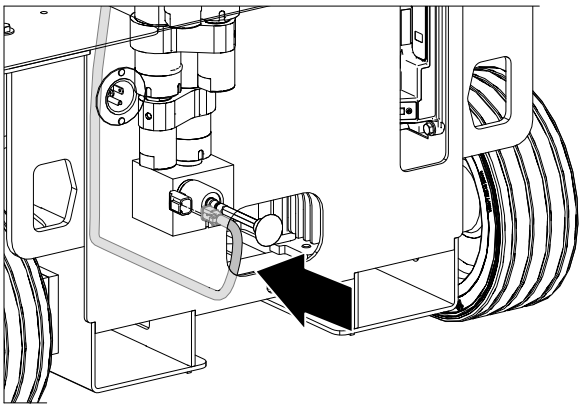

6. Route the mast cable and AC power cable through the hole in the chassis.
7. Route the mast cable into the service compartment.

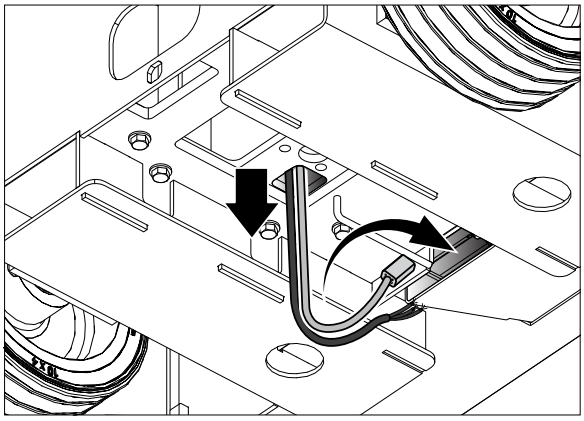

8. Open the service compartment cover.
9. Connect the mast cable to the main harness.
10. Use tie wraps to secure the mast cable to the existing cable bundles.

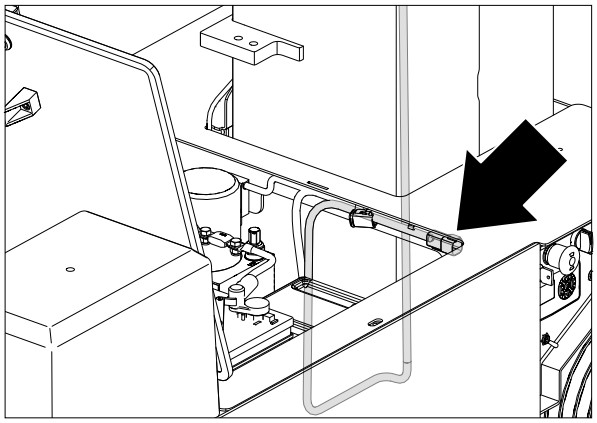

11. Route the AC power cable towards the rear of the machine and out the AC inlet hole.
12. Connect the AC power cable to the inlet.
    - Green wire to the green terminal
    - Black wire to the bronze terminal
    - White wire to the silver terminal

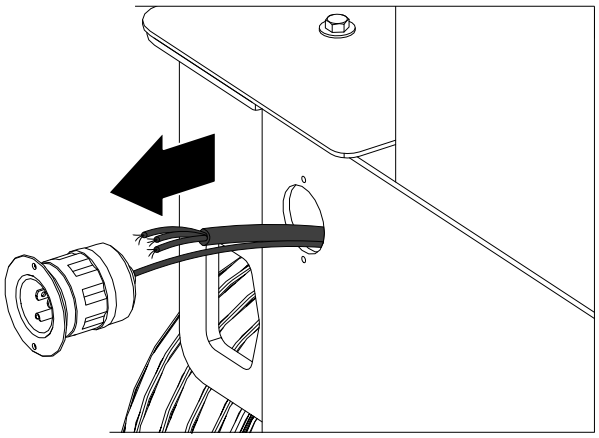

13. Use new pop rivets to secure the AC inlet to the chassis.

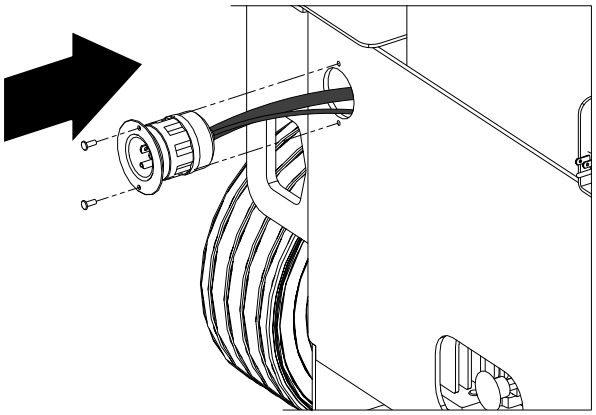

14. Use the nut removed earlier to secure the green ground wire from the AC inlet to the chassis
15. Use tie wraps to secure the AC power cable to the existing cable bundles.

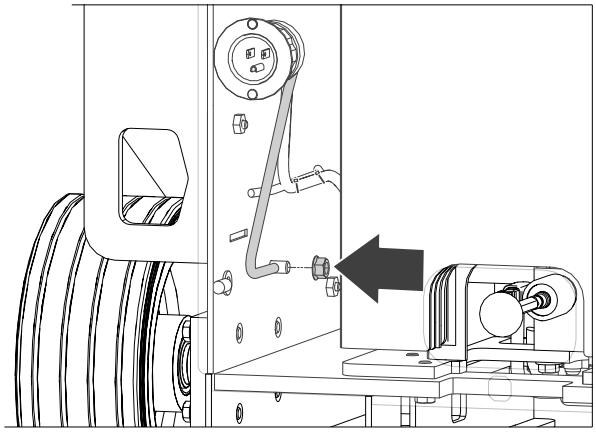

16. Install the platform. Refer to section *5.2-3 Install the Platform*.

5.3-6 Replace the Mast Wear Pads

Preparation

1. Remove and set aside the platform. Refer to section *5.2-1 Remove the Platform*.
2. Remove and set aside the lift cylinder. Refer to section *5.3-2 Remove the Lift Cylinder*.

Mast identification

The masts will need to be removed one section at a time. Refer to the images below for the mast number.

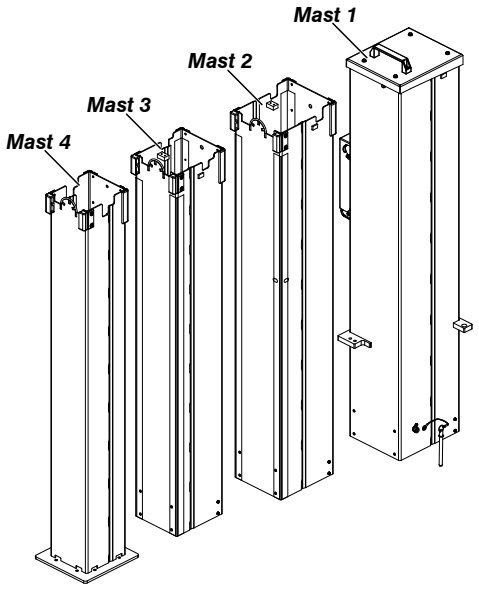

SJ12 E

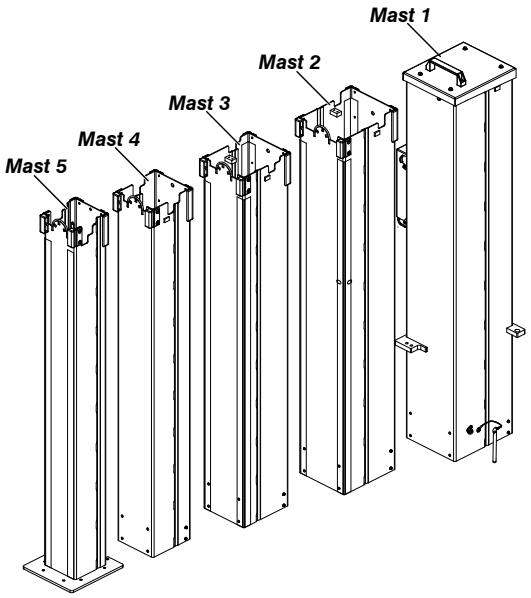

SJ16/20 E

Remove mast 1 and wear pads

1. Open the service compartment cover.
2. Disconnect the mast cable from the main harness.
3. Cut zip ties along the cable bundles to free the mast cable.

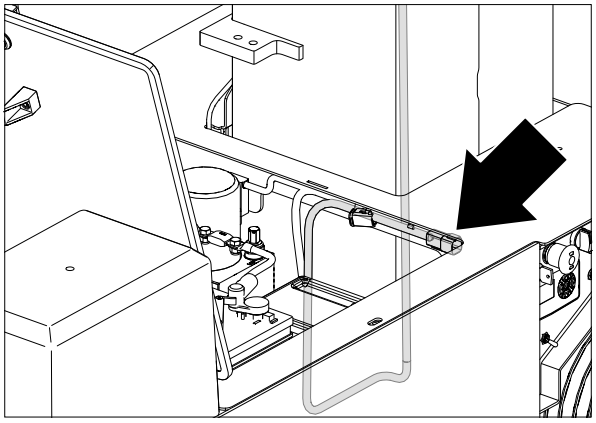

4. At the rear of the machine, drill out the rivets that secure the AC inlet to the chassis.
5. Pull out the AC inlet.
6. Disconnect the wires from the back of the AC inlet.

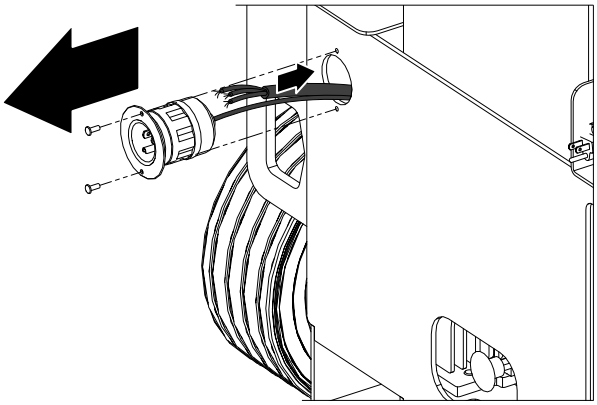

7. Remove and set aside the nut that secures the ground wire to the chassis. You may need to remove the chassis cover to access the wire.
8. Cut the tie wraps that secure the AC power cable to the cable carrier and existing cable bundles.

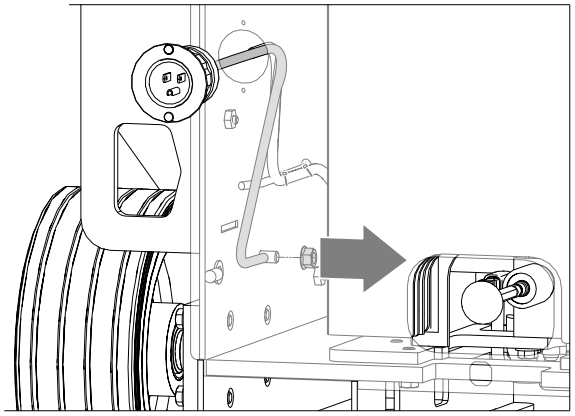

9. Remove and set aside the screws that secure the mast electrical housing to the mast.

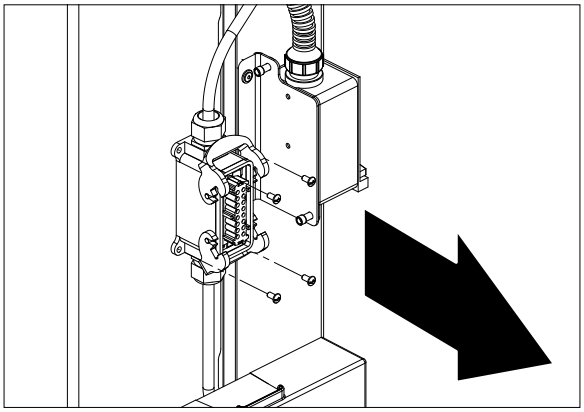

10. Remove the rivets and washers that secure the AC outlet to the mast. Set aside the washers.

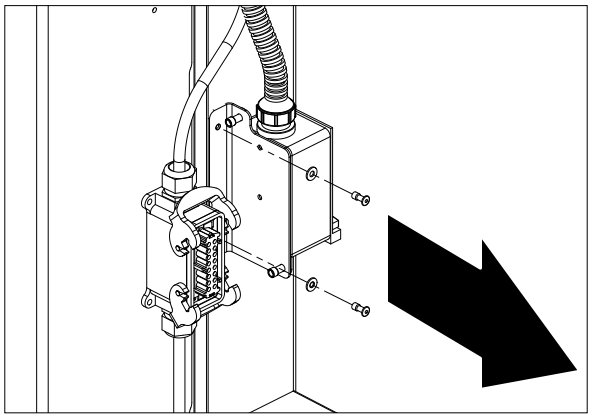

11. Remove and set aside the cable clamp and hardware.

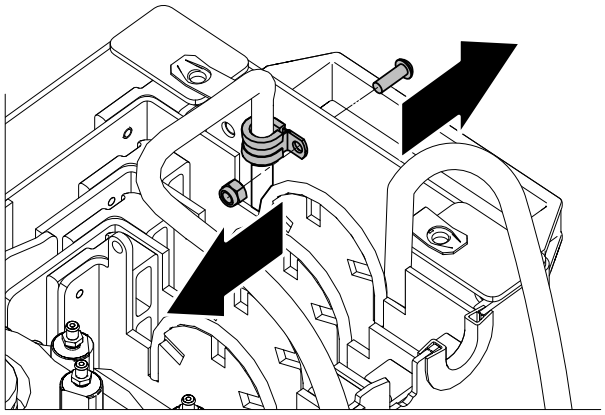

12. Remove and set aside the cable clips from the mast cable.

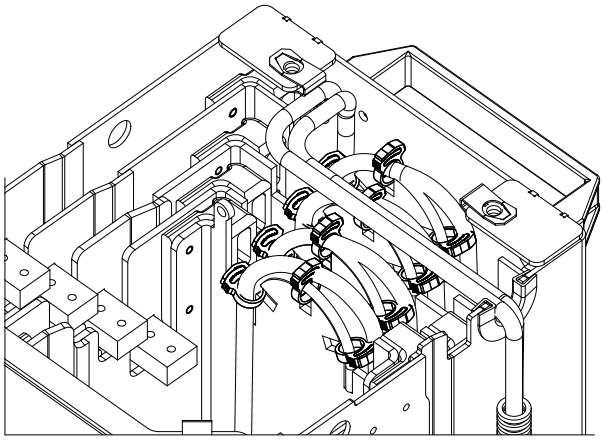

13. Slowly pull the loose mast cable upwards. There will be four steel weighted rollers at the bottom of each cable coil. Set the steel weights and mast cable aside.

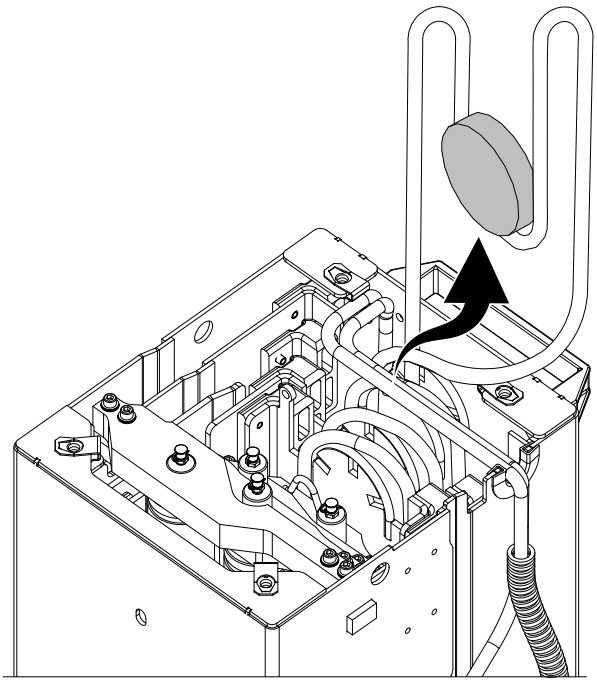

14. Use hoist rings and lifting straps in opposite corners to raise the outer mast until the bottom of the mast is visible.

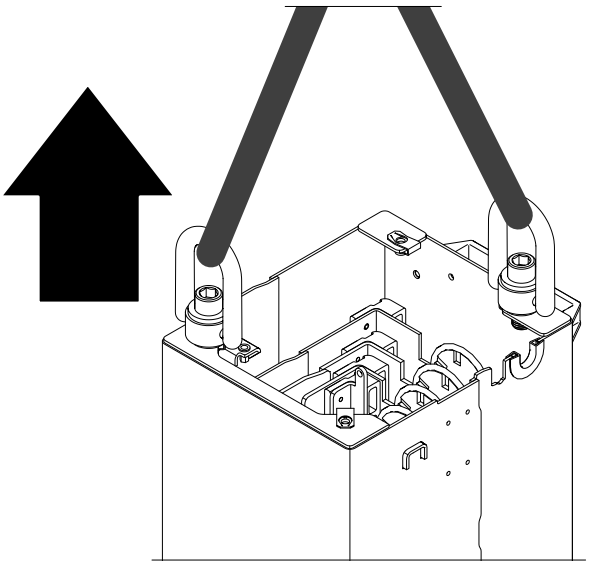

15. Remove and discard the rear wear pads and thread rolling screws from the bottom of the mast.

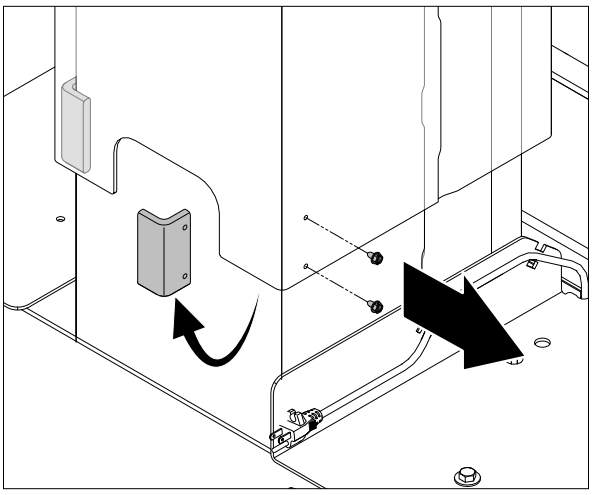

16. Drill out the pop rivets.Remove and discard the front wear pads from the bottom of the mast.

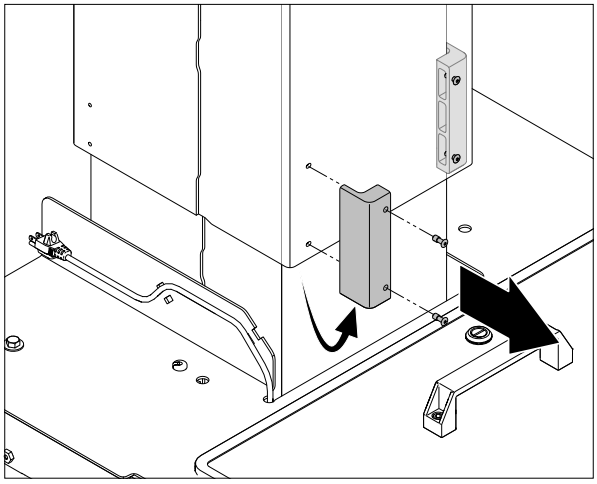

⚠ CAUTION

Crush hazard. Personnel on the ground must stay away from the mast while it is being moved. If you do not obey, there is a risk of minor or moderate injury.

17. Remove the outer mast completely and set it aside on a protective surface.

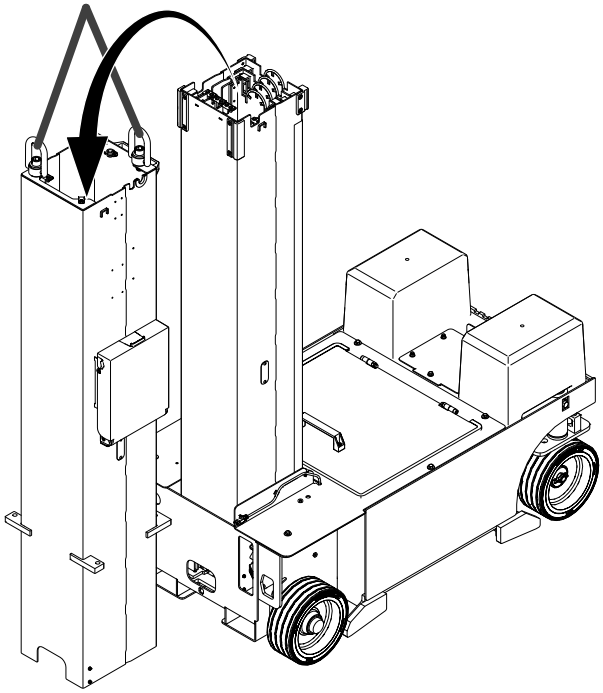

Remove masts 2 and 3 (SJ12 E) or 2, 3 and 4 (SJ16/20 E) and their wear pads

1. Wipe away the lubricant around the four wear pads and corners at the of the mast.

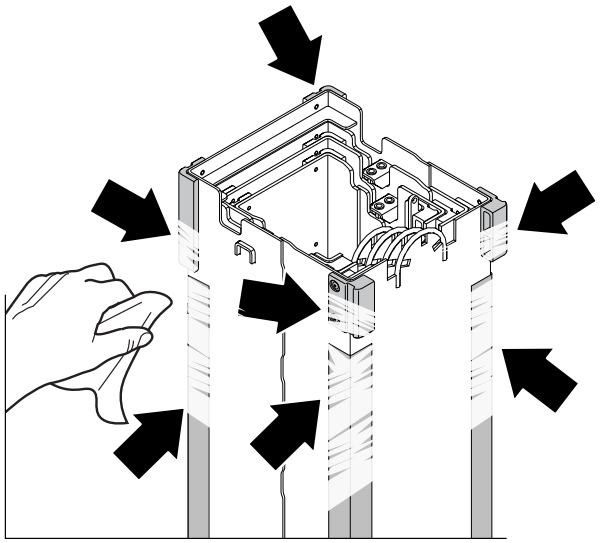

2. Wrap lifting straps around the mast below the top wear pads.
3. Raise the mast until the bottom of the mast wear is visible.

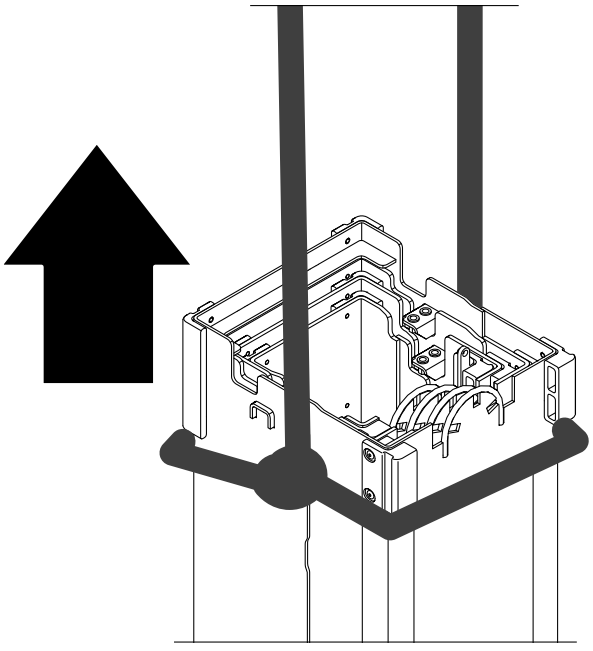

4. Remove and discard the rear wear pads and thread rolling screws at the bottom of the mast.

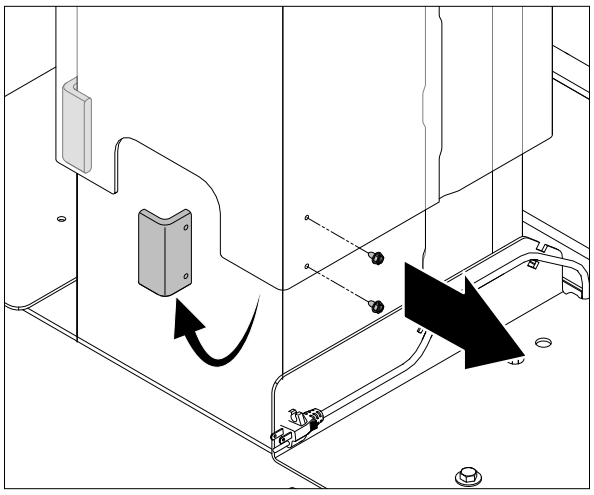

5. Drill out the pop rivets.Remove and discard the front wear pads at the bottom of the mast.

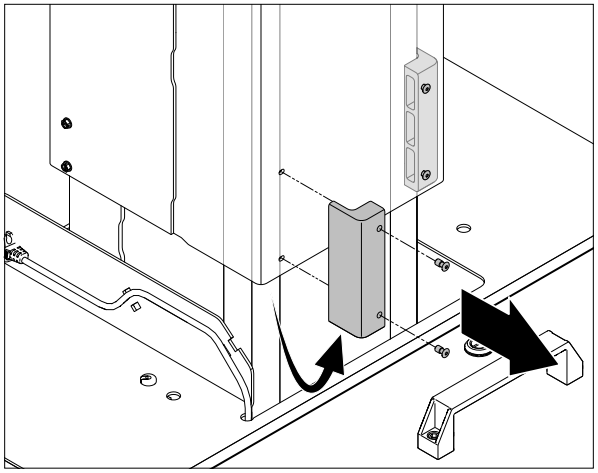

⚠ CAUTION

Crush hazard. Personnel on the ground must stay away from the mast while it is being moved.

Make sure the wear pads are dry and do not have lubricant before you raise the mast.

If you do not obey, there is a risk of minor or moderate injury.

6. Remove mast 2 completely and set it aside on a protective surface.

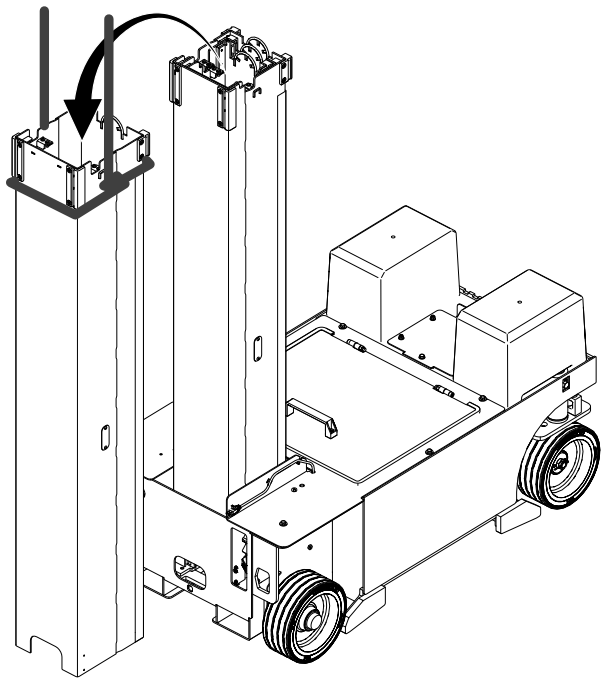

7. Repeat steps 1 through 6 with the remaining masts until there is only one mast left.

Replace the top wear pads on all masts

1. Drill out the pop rivets, then remove and discard the wear pads at the top of one of the masts.

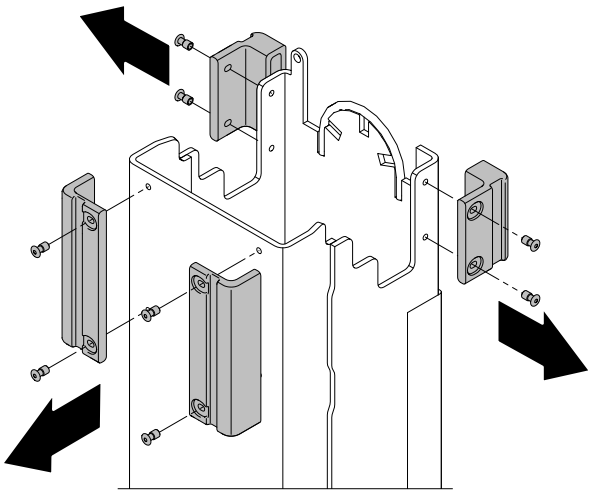

2. Use pop rivets (3/16” x 9/16”) to attach two new thick and short wear pads **(158087)** to the front of the mast near the top.

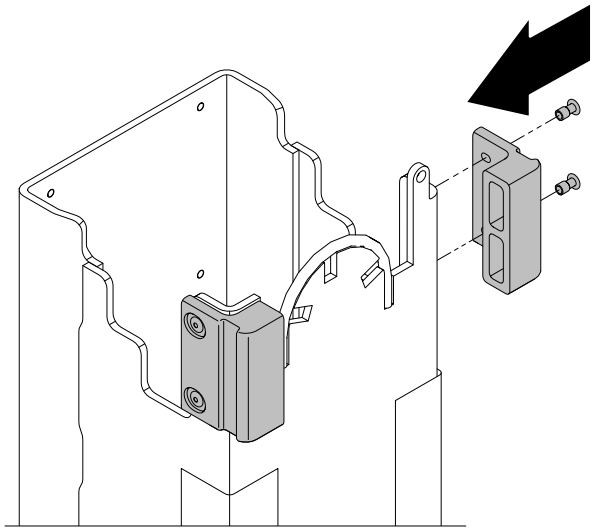

3. Use pop rivets (3/16” x 9/16”) to attach two new thin and long wear pads **(159398)** to the rear of the mast.

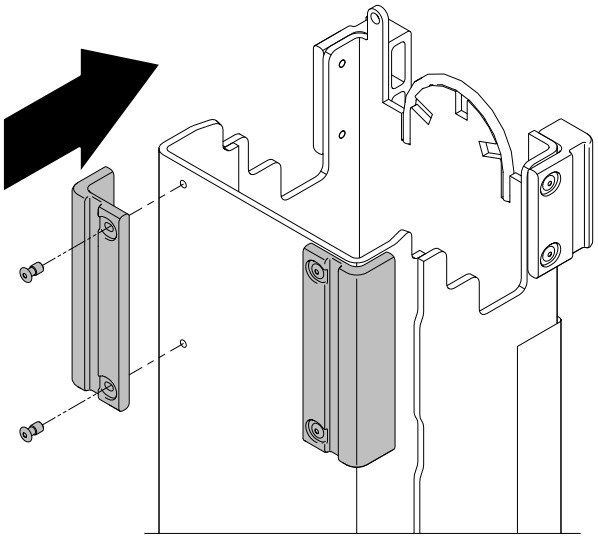

4. Repeat steps 1 through 3 for the other masts.

Install the mast cable

1. Insert the end of the mast cable without the housing down mast 4 (SJ12 E) or 5 (SJ16/20 E) and out through the base of the mast.

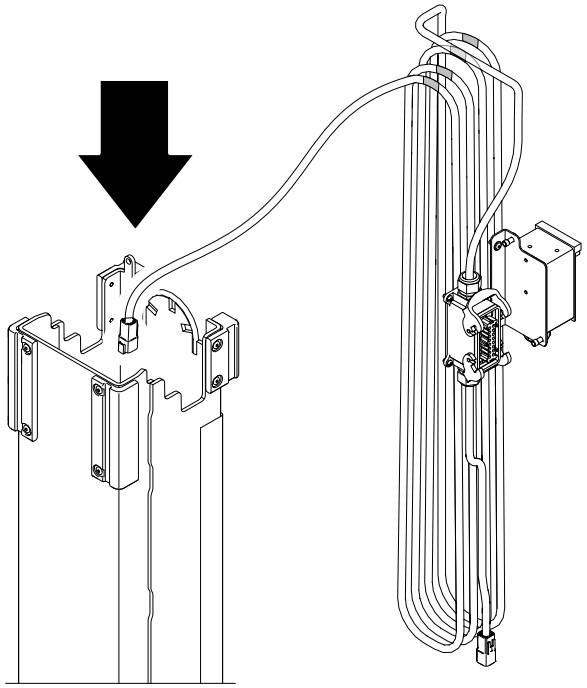

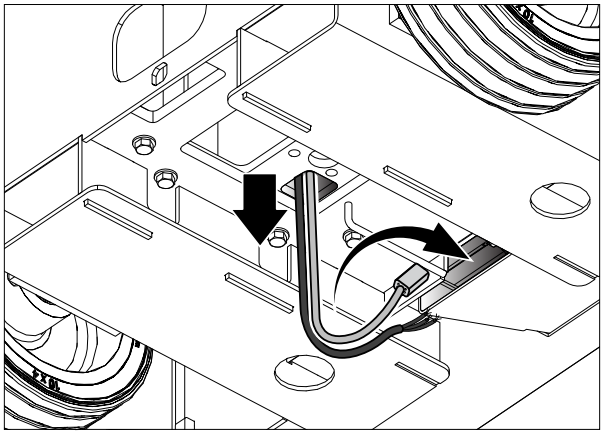

2. The mast cable has tape markers at specific intervals so you know where to clamp it on the cable carriers.
3. Use three of the cable clamps removed earlier to secure the mast cable to the cable carrier in three places.The marked part of the cable is clamped at the center top point of the cable carrier.

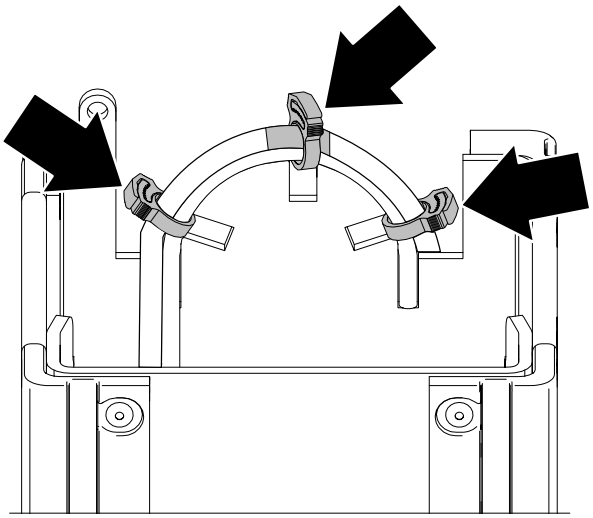

4. Lower the rest of the mast cable down mast 4/5 so you can install the next mast section.

Install masts 2 and 3 (SJ12 E) or 2, 3 and 4 (SJ16/20 E) and the bottom wear pads

1. Lubricate the four wear pads and the four corners all the way down mast 3 (SJ12 E) or 4 (SJ16/20 E).

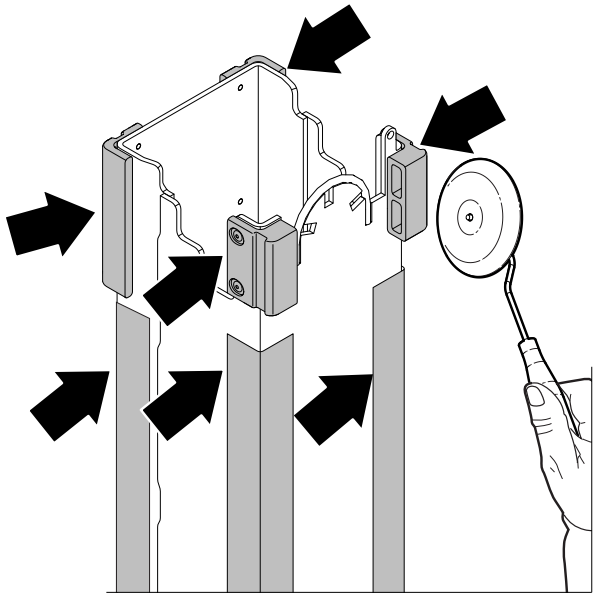

2. Use lifting straps to put mast 3 (SJ12 E) or 4 (SJ16/20 E) over mast 4 (SJ12 E) or 5 (SJ16/20 E). Make sure the emergency lowering valve cutout in the mast faces the rear of the machine.

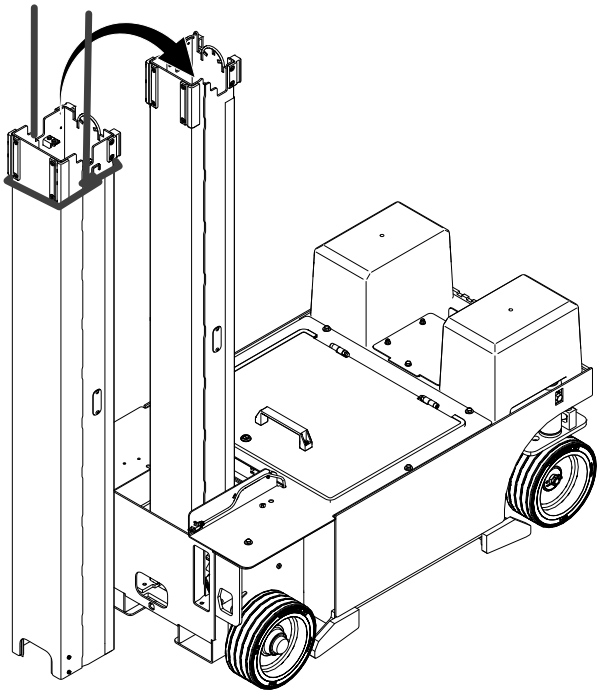

3. Keep the mast partially raised so the bottom of the mast is visible.
4. Use new thread rolling screws (10-32 x 3/8”)to attach two new thin and short wear pads (**157763**) to the rear of the mast on the inside.

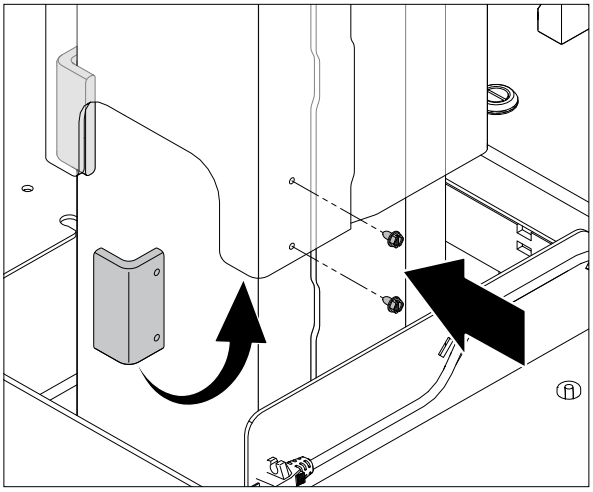

5. Use new pop rivets to attach two new thick and long wear pads (**159399**) to the front of the mast on the inside.

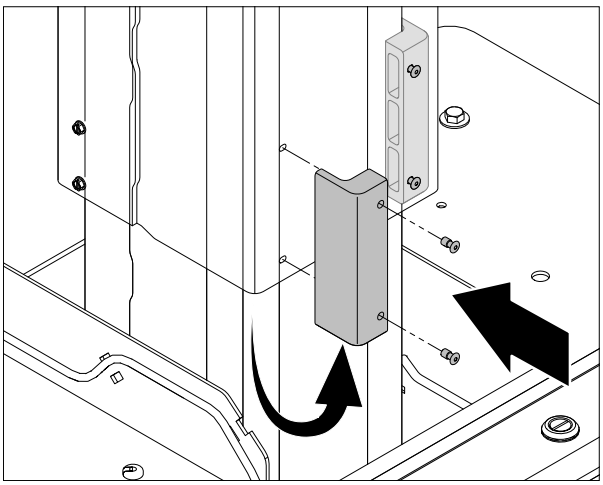

6. Pull the mast cable out the inner mast and start to lower it between the two masts until the next tape marker is at the top of the cable carrier.

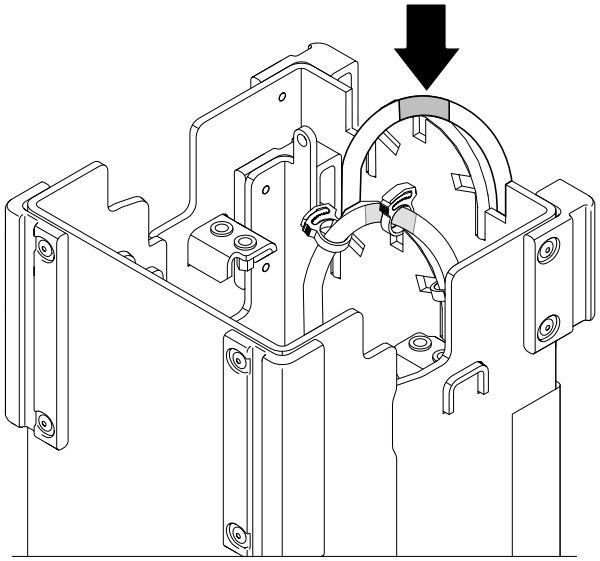

7. Use three of the cable clamps removed earlier to secure the cable to the outer mast cable carrier. Make sure the tape marker is at the top.

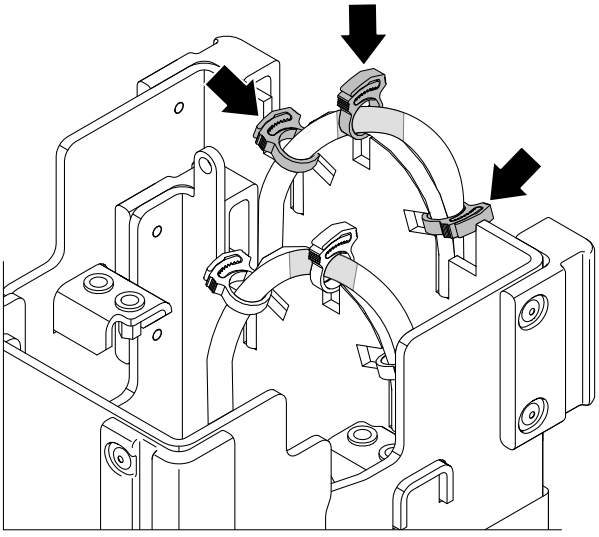

8. Raise the outer mast until the cable loop is visible from the bottom of the mast.

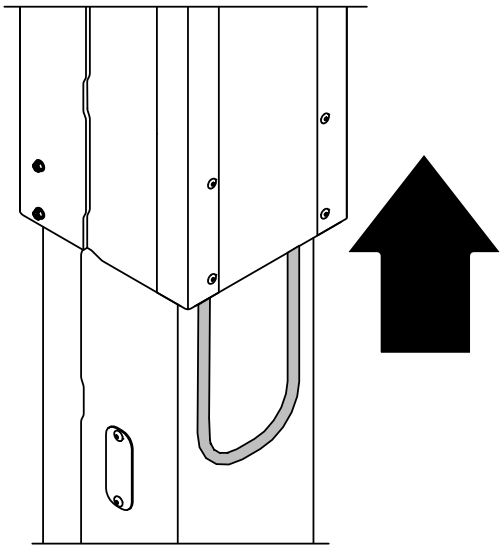

9. Make sure the cable isn't twisted, then put a weighted roller into the cable loop.

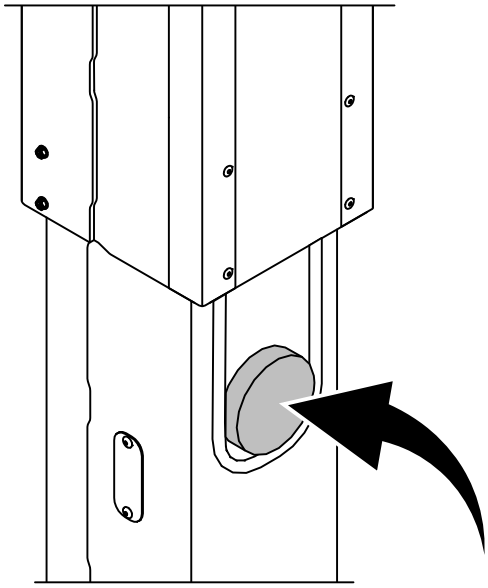

10. Fully lower the mast onto the chassis.

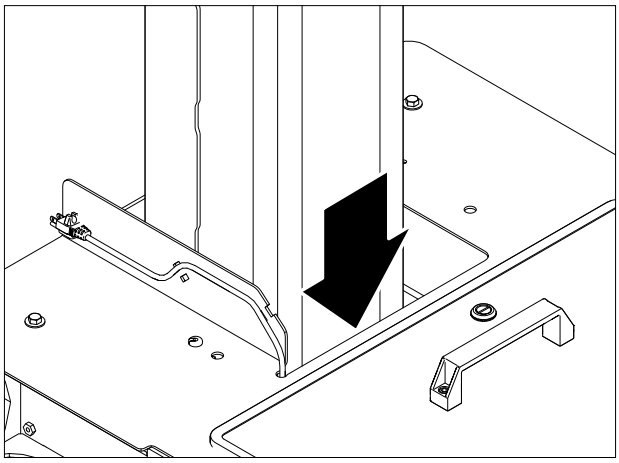

11. Lubricate the four wear pads and the four corners all the way down the mast.

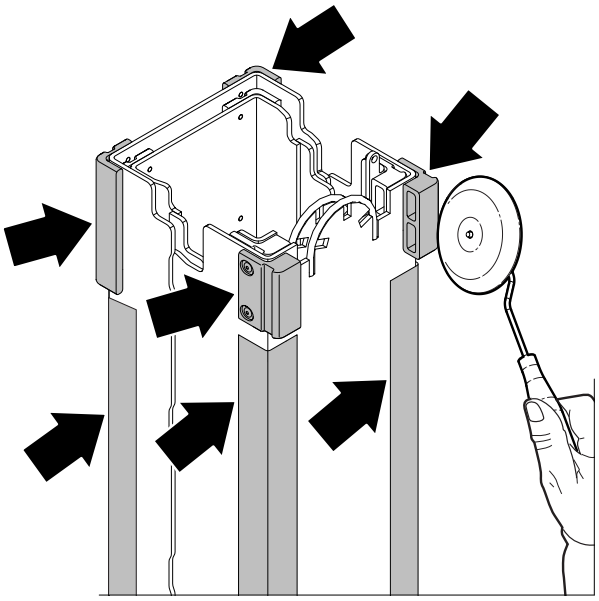

12. Repeat steps 2 through 11 for mast 2 (SJ12 E) or both 3 and 2 (SJ16/20 E).

Install the outer mast and bottom wear pads

1. Use hoist rings on opposite corners and lifting straps to put mast 1 over mast 2.

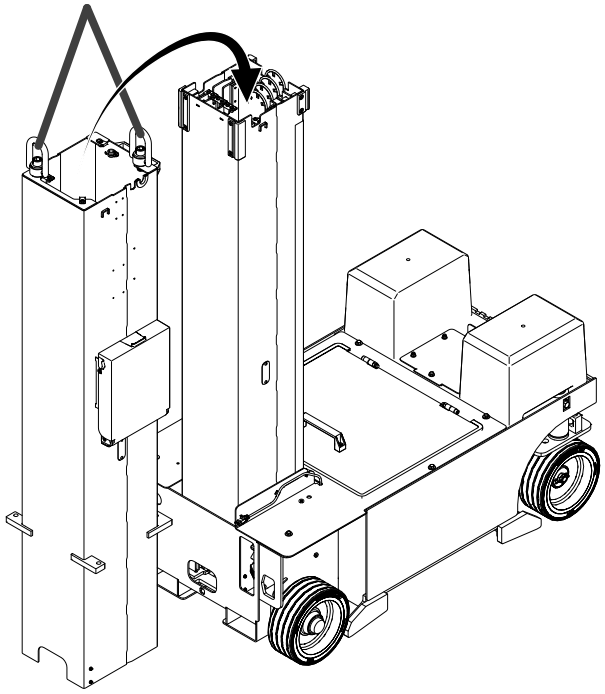

2. Keep mast 1 partially raised so the bottom of the mast is visible.
3. Use new thread rolling screws(10-32 x 3/8”)to attach two new thin and short wear pads (**234169**) to the rear of the mast on the inside.

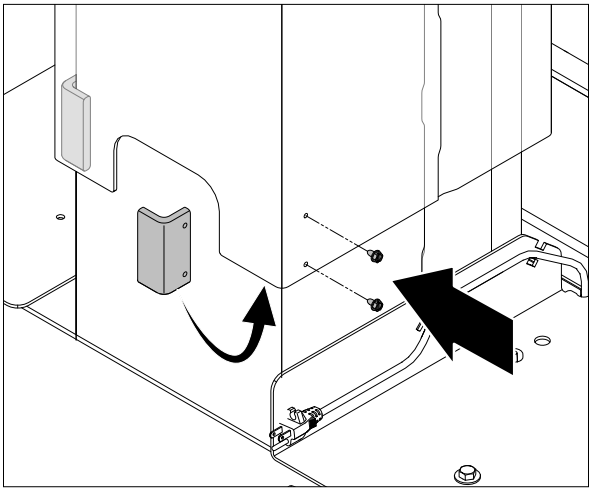

4. Use new pop rivets to attach two new thick and long wear pads (**234171**) to the front of the mast on the inside.

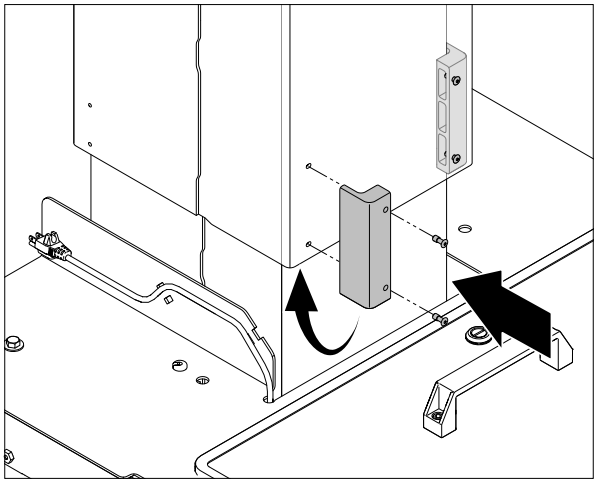

5. Pull the remaining mast cable out of the innermost mast and lower it between mast 1 and mast 2.

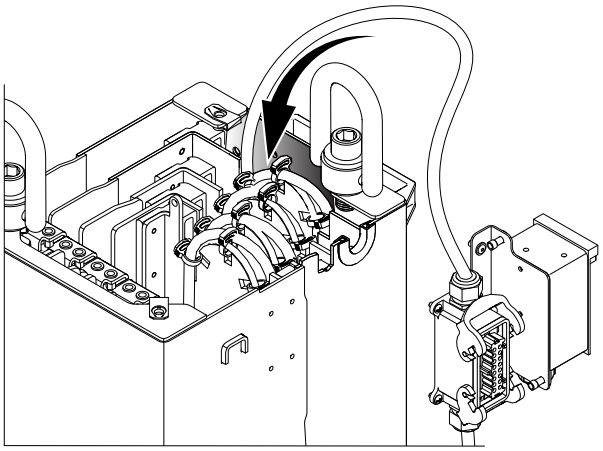

6. Use the screws removed earlier to mount the mast electrical housing to the side of mast 1.

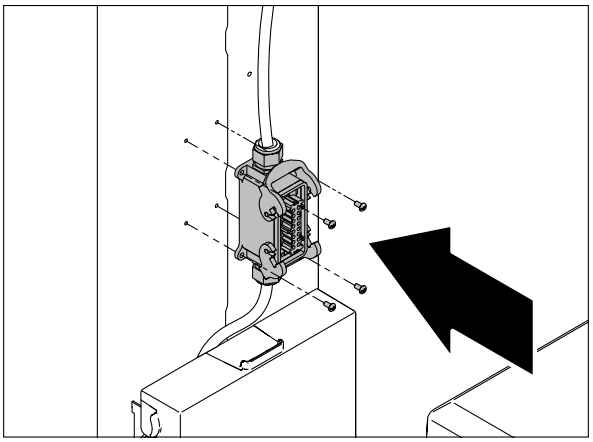

7. Use new pop rivets and the washers removed earlier to mount the AC outlet box to the side of mast 1.

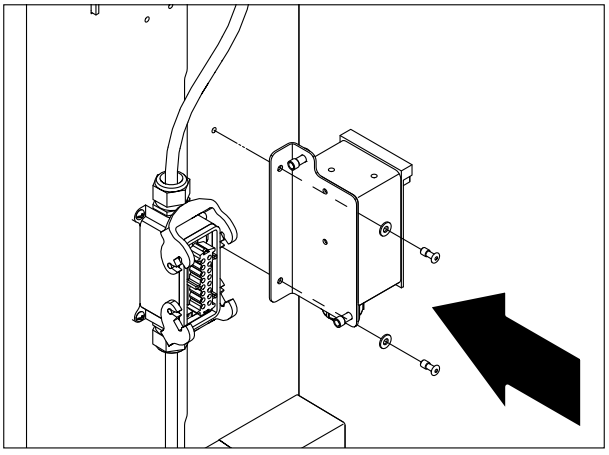

8. Use the cable clamp, nut and bolt removed earlier to attach the mast cable to the inner face of mast 1.

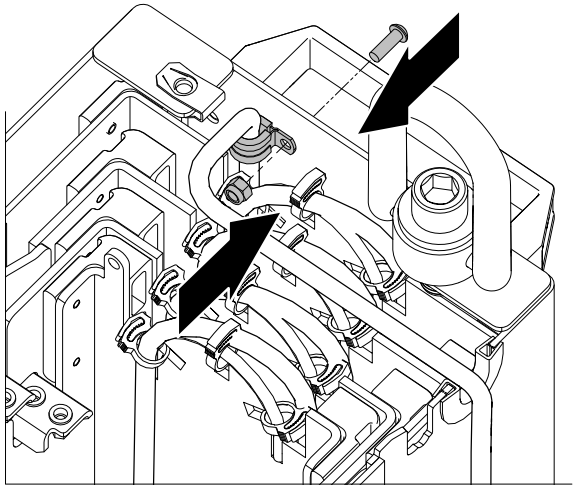

9. Raise mast 1 until the cable loop is visible.

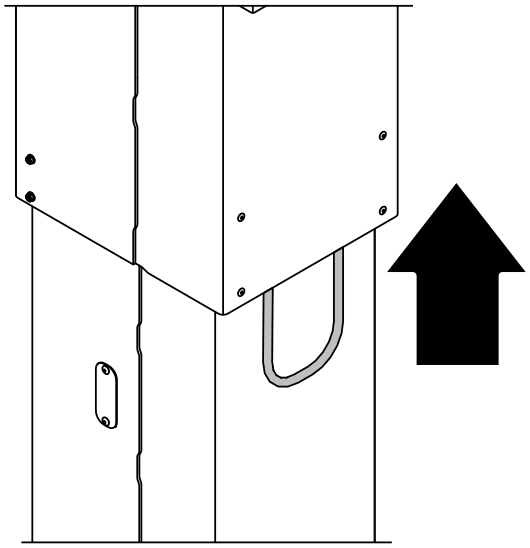

10. Make sure the cable isn't twisted, then put a weighted roller into the cable loop.

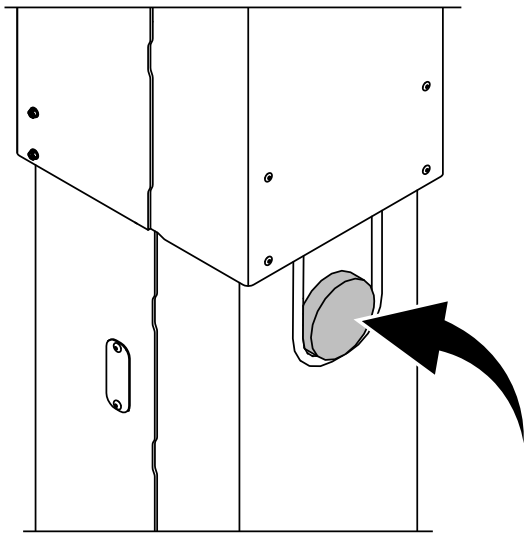

11. Fully lower mast 1 onto the chassis.

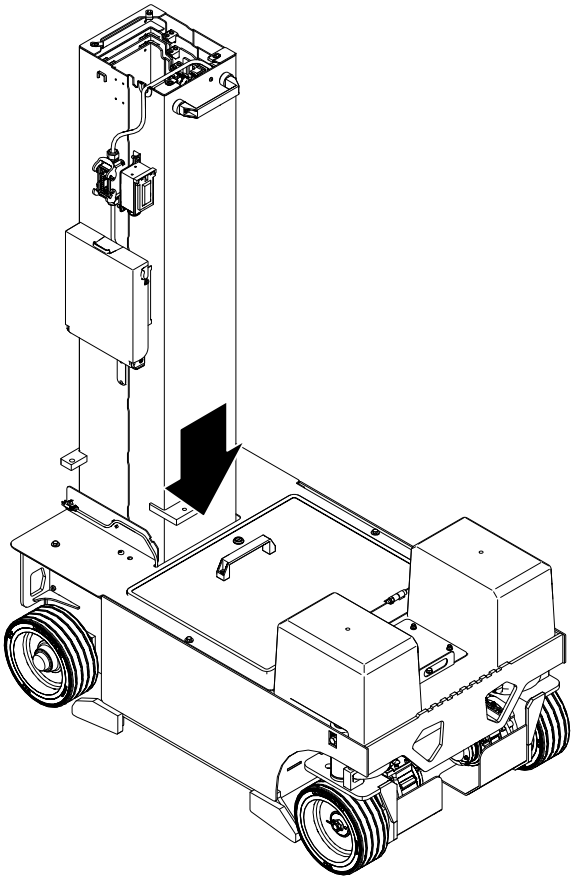

12. Open the service compartment cover.

13. Connect the mast cable to the main harness.

14. Use tie wraps to secure the mast cable to the existing cable bundles.

15. Close the service compartment cover.

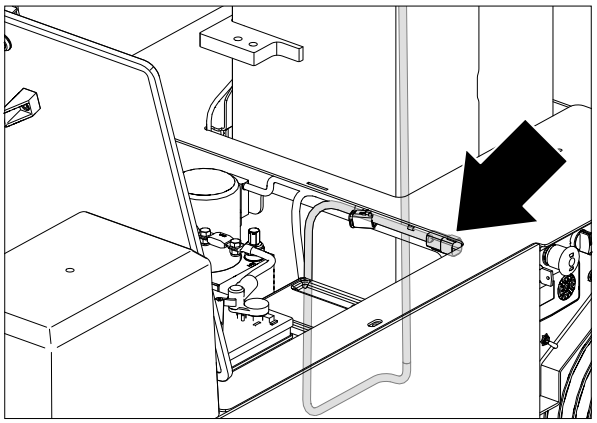

16. Route the AC power cable towards the rear of the machine and out the AC inlet hole.
17. Connect the AC power cable to the inlet.
    - Green wire to the green terminal
    - Black wire to the bronze terminal
    - White wire to the silver terminal

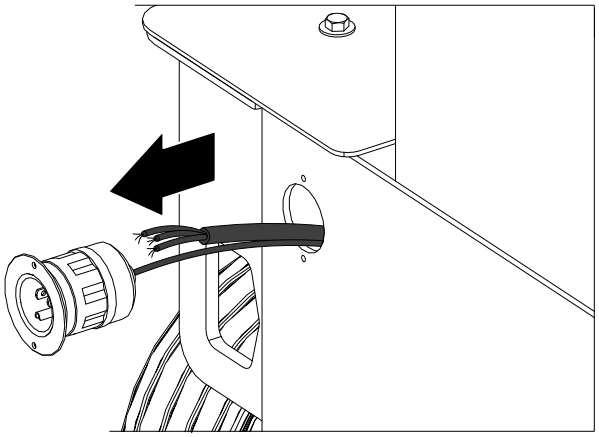

18. Use new pop rivets to mount the AC inlet to the chassis.

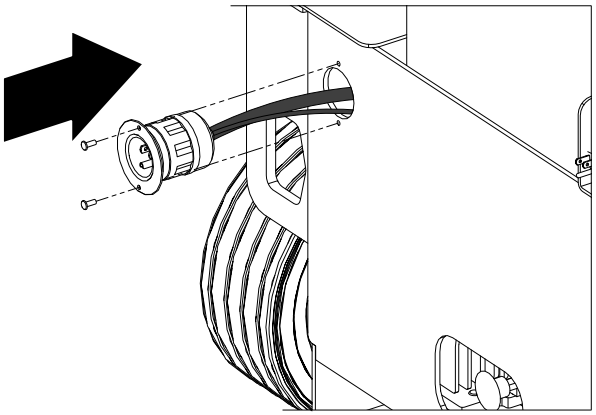

19. Use the nut removed earlier to secure the green ground wire from the AC inlet to the chassis.
20. Use tie wraps to secure the AC power cable to the existing cable bundles.

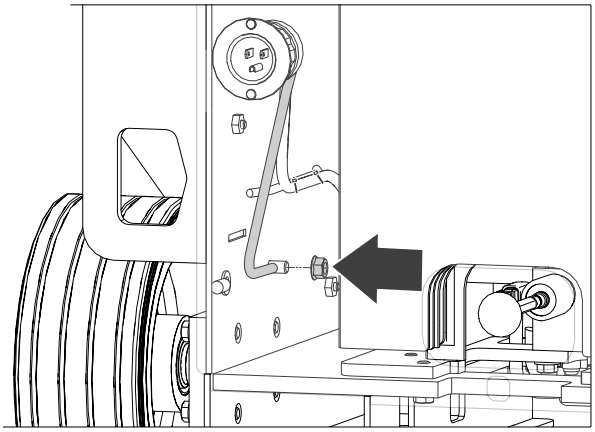

Install the lift cylinder and platform

1. Install the lift cylinder. Refer to section *5.3-3 Install the Lift Cylinder*.
2. Install the platform. Refer to section *5.2-3 Install the Platform*.

5.4 Power Unit

5.4-1 System Pressure Adjustment

1. Remove the control box from the platform control box mount and bring it down to the ground.
2. Pull the deck all the way out into the service position.
3. Unlatch and open the service access door.

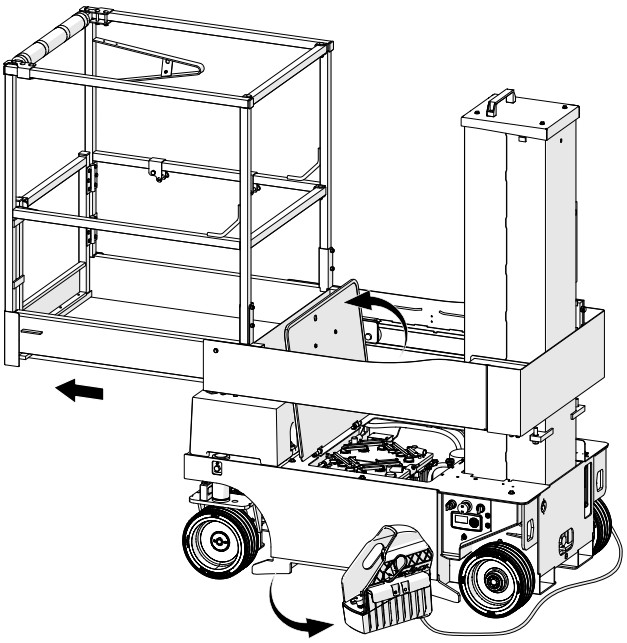

4. Locate the test port on the power unit manifold. Remove the cap.
5. Connect a 350 bar (5000 psi) pressure gauge to the test port.

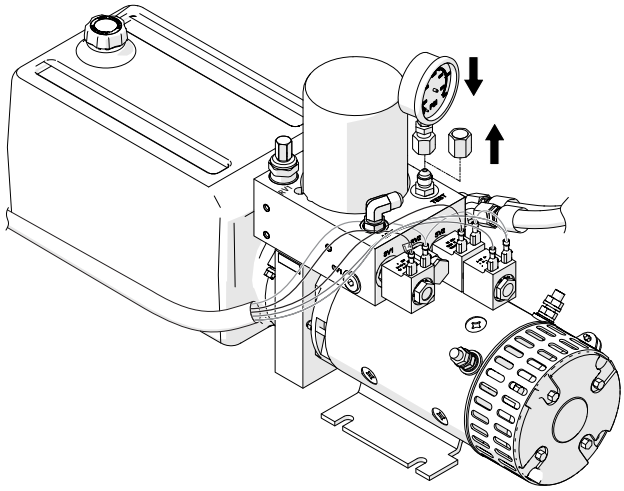

6. Loosen the locknut on system relief valve RV1.

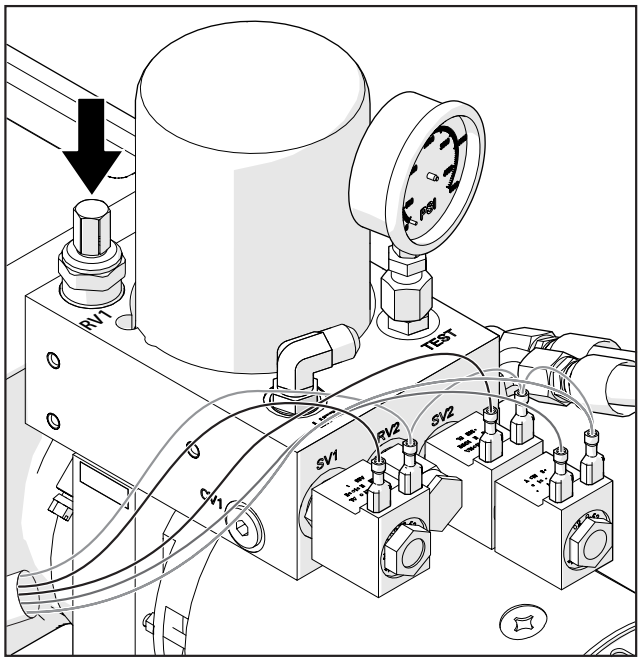

7. Remove the nut from the 3H-14 coil, then remove the coil from the SV1 valve.

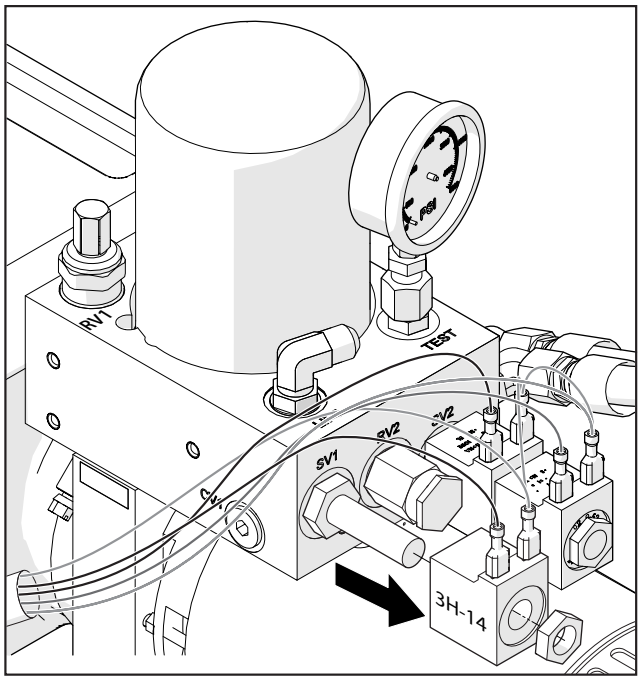

8. Move the Lift/Drive switch on the platform control box to the lift position.
9. Lift and hold the diagnostic switch in the up position.
10. Squeeze the enable switch on the joystick then move the joystick all the way forward and hold it there.

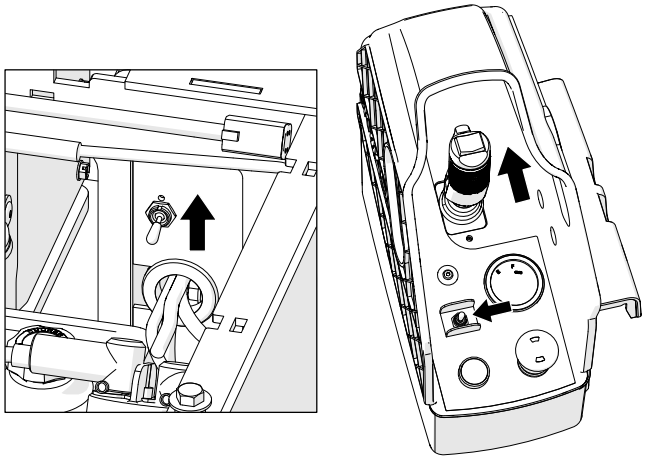

11. Look at the reading on the pressure gauge. If the pressure shows as 138 bar (2000 psi), continue with the next step. If it is not in range, turn the stem on the relief valve clockwise to increase the pressure or counterclockwise to decrease the pressure.

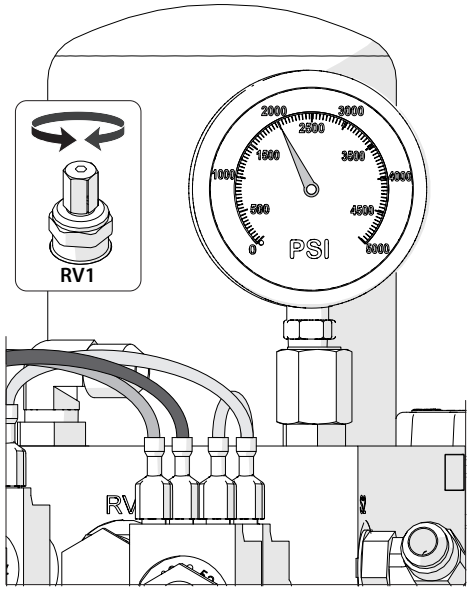

12. Release the joystick and the diagnostic switch.
13. Tighten the locknut on the relief valve.
14. Place coil 3H-14 on valve SV1. Install the nut.
15. Remove the pressure gauge from the test port. Cap the port.

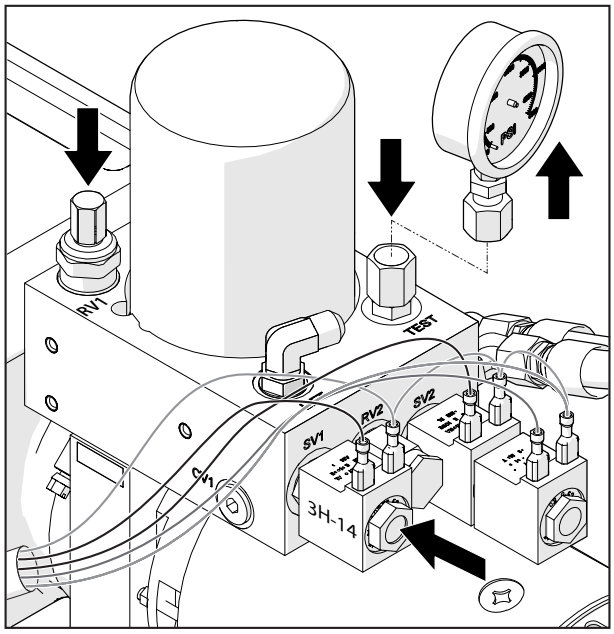

16. Close the service access door and latch it.
17. Push the deck all the way in.
18. Return the platform control box to the control box mount.

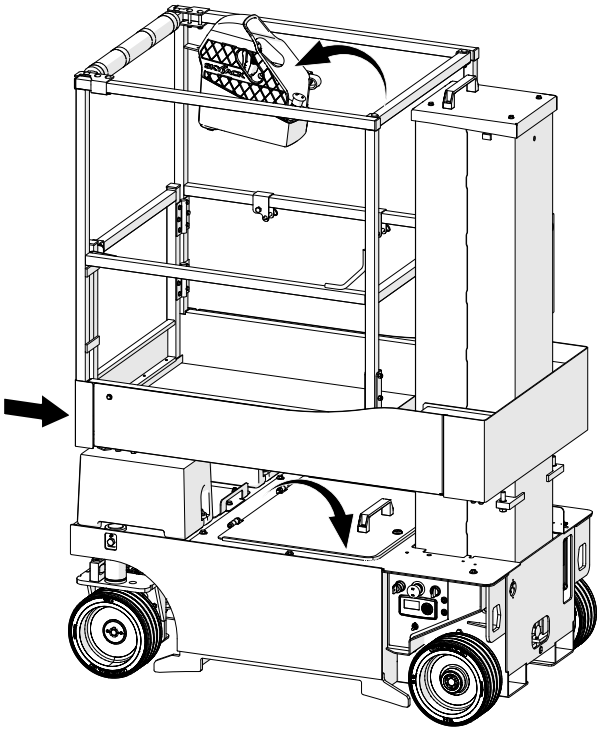

5.4-2 Test the DC motor

1. Raise the mast and install the service pin.
2. Turn the main power disconnect switch to the off position.
3. Unlatch and open the service access door.
4. Locate the power unit DC motor.
5. Sand the surface of the nut at the end of the motor case to provide a good connection for a multimeter.
6. Set a multimeter to ohms Ω.
7. Place the positive lead on the motor's **negative** input. Place the negative lead on the nut that was sanded.

   Result:

   - Good=open line (OL) or any ohms value with "M" or "K", showing a weak connection.
   - Bad=any ohms value below 1k, or direct continuity.

   Solution: clean, rebuild or replace the DC motor.

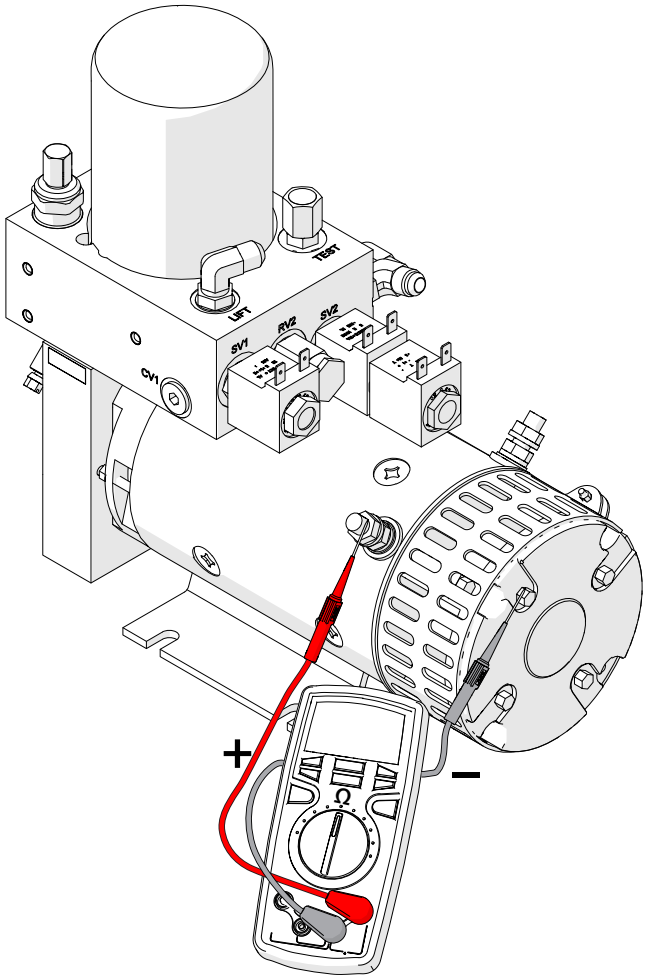

8. Repeat step 5 with the positive lead on the motor's **positive** input. Place the negative lead on the nut that was sanded.

   Result:

   - Good=open line (OL) or any ohms value with "M" or "K", showing a weak connection.
   - Bad=any ohms value below 1k, or direct continuity.

   Solution: clean, rebuild or replace the DC motor.

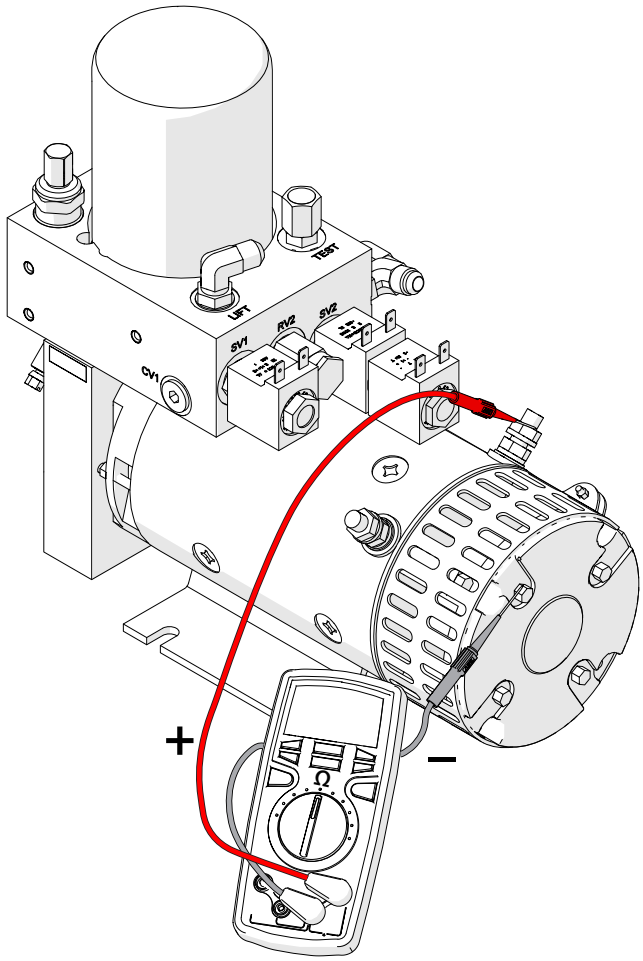

9. Place the positive lead on the motor's positive input. Place the negative lead on the motor's negative input.

Result:

- Good=good connection or any ohms value below 10 ohms.
- Bad=open line (OL) or any ohms value with "M" or "K", showing a weak connection.

Solution: clean, rebuild or replace the DC motor.

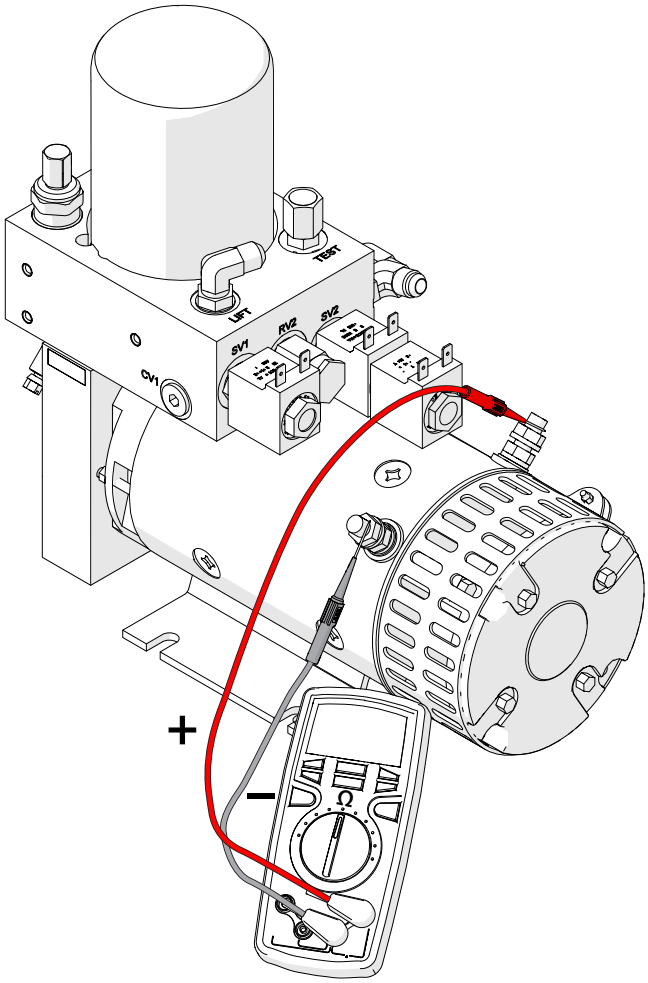

5.5 Tilt Switch

5.5-1 Level the MEWP

1. Charge the battery to a minimum of 50% before starting this procedure.
2. Park the MEWP on firm, level ground.
3. Put two calibrated spirit levels on a flat surface on the chassis.

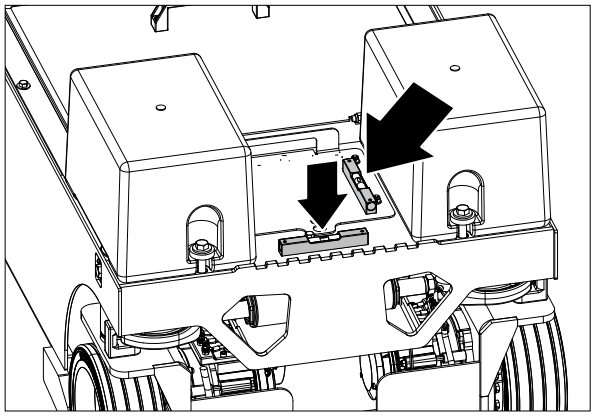

4. Make sure the MEWP is level in the longitudinal (front to back) and lateral (side to side) directions.
5. If the MEWP is not level in the longitudinal and lateral directions, raise the MEWP with a jack and place shims below the wheels as needed to level the machine.

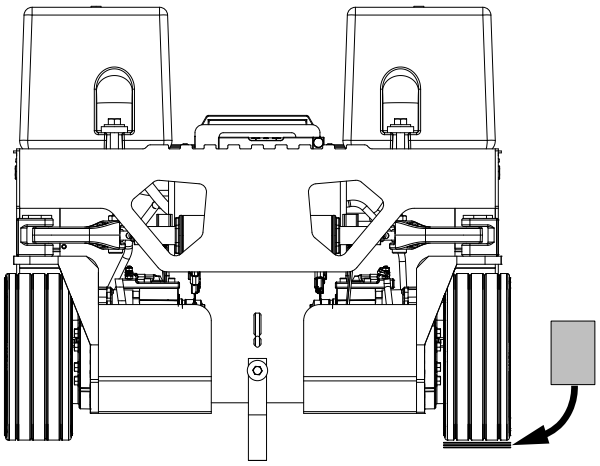

6. Pull the deck all the way out into the service position.
7. Unlatch and open the service access door.

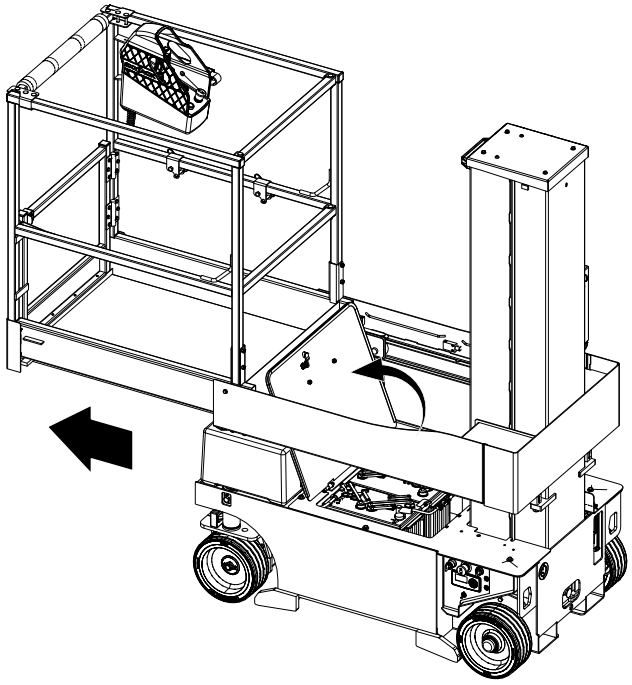

8. Push in the emergency stop button on the base control console.
9. Turn the off/platform/base key switch to the off position and remove the key.
10. Turn the main power disconnect switch to the off position.

5.5-2 Replace the tilt switch

1. Disconnect the tilt switch from the tilt switch harness.

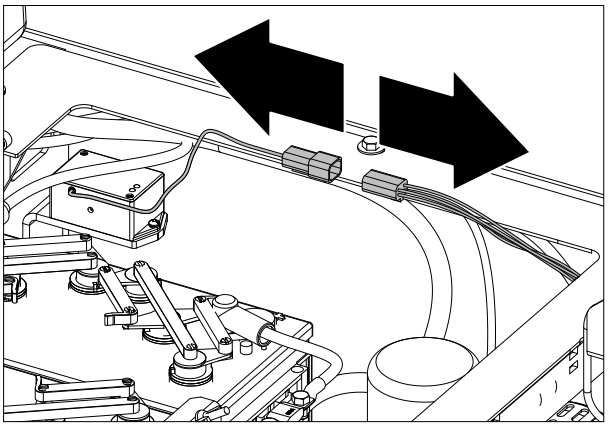

2. Remove and discard the existing tilt switch. Set the hardware aside.

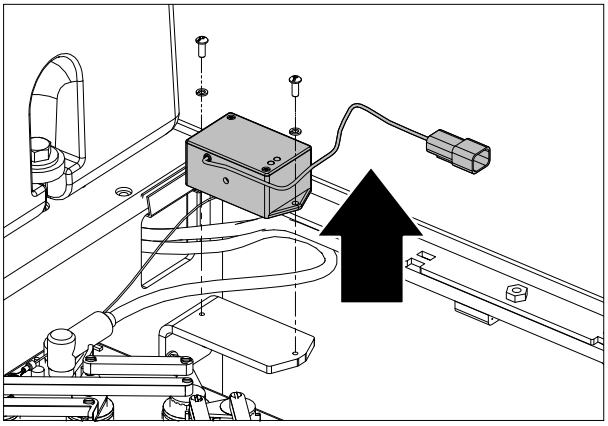

3. Mount the new tilt switch onto the bracket. Make sure the zero button at the side of the tilt switch is facing into the center of the chassis.
4. Use the hardware removed earlier to secure the tilt switch to the bracket.

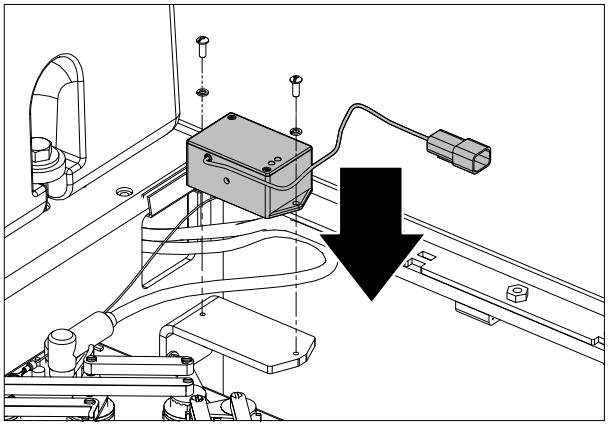

5. Connect the tilt switch to the tilt switch harness.

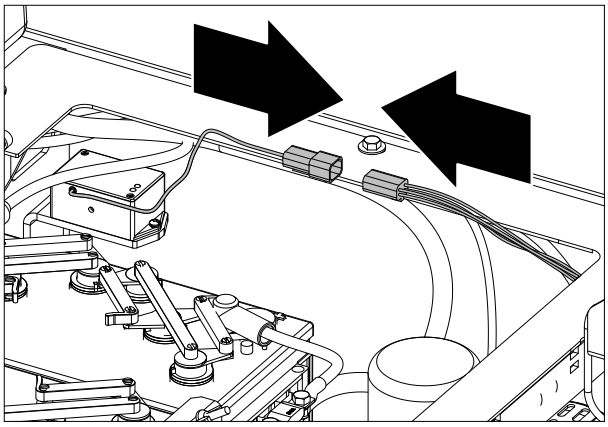

6. Go to *5.5-4 Set Up a New Tilt Switch.*

5.5-4 Set Up a New Tilt Switch

NOTE

To reprogram an existing tilt switch, go to 5.5-5 Reprogram an Existing Tilt Switch.

NOTE

The tilt circuit is only powered when the controls are powered up.

1. Turn the main disconnect switch to the ON position.
2. Turn the base/off/platform key switch to the base position.
3. Pull out both emergency stop buttons.
4. Verify the switch is powered (red or green LED will be solid).

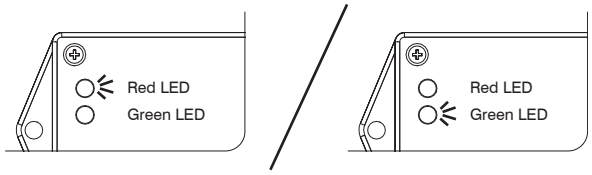

5. Program the tilt switch:
   a. Press and release the set to zero button 3 times. Observe LED flash codes as shown below.
   b. Only the red LED will blink for 4 seconds.

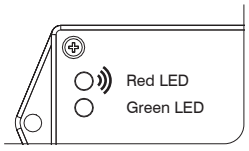

   c. Both LEDs will flash for 1 second.
   Results: The switch is learning the new zero position.

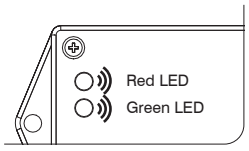

   d. Both LEDs will turn on solid for 1 second.
   Results: The new zero position has been learned.

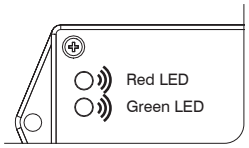

   e. The green LED will flash and then the red LED will turn on solid for 2 seconds.
   Results: The switch is verifying the new zero position.

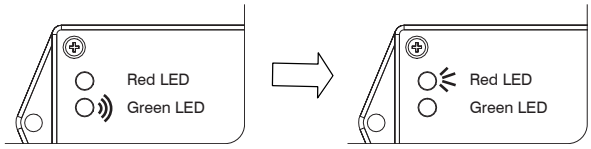

   f. The green LED will turn on solid.
   Results: The switch is ready for normal operation.

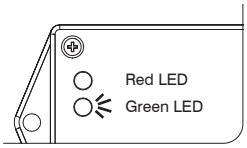

6. Turn the main power disconnect switch to the off position.
7. Push in the emergency stop buttons.

5.5-5 Reprogram an Existing Tilt Switch

Light Indicators

The set to zero button is located on this face next to the harness

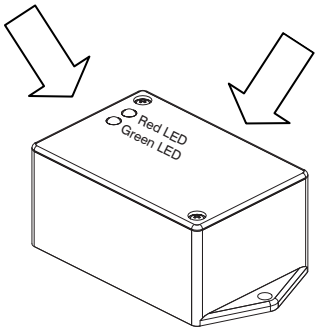

NOTE

The tilt circuit is only powered when the controls are powered up.

1. Turn the main disconnect switch to the ON position.
2. Turn the base/off/platform key switch to the base position.
3. Pull out both emergency stop buttons.
4. Verify switch is powered (red or green LED will be solid).

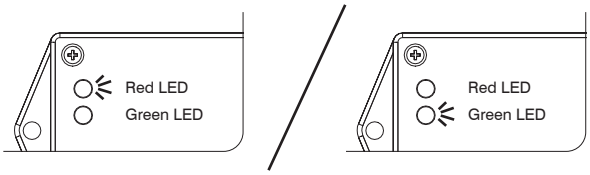

5. Reprogram the Tilt Switch

   a. Press and hold the set to zero button for 5 seconds.
   Results: Both LEDs will be OFF.

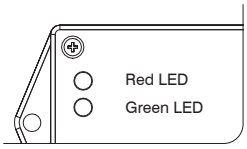

   b. Both LEDs will flash.

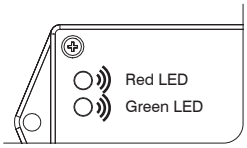

IMPORTANT

Step "c" must be completed within a 5 second period, or the switch will automatically exit program mode and return to normal operation using the previously stored data.

   c. Press and release the set to zero button 3 times.

   d. If the 5 second period has expired prior to completion, repeat steps "a", "b" and "c".

   e. Observe program delay / stabilization time (only the red LED will blink for 4 seconds).

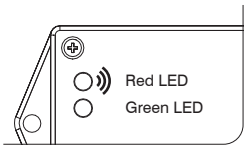

   f. Both LEDs will flash for 1 second.
   Results: The switch is learning the new zero position.

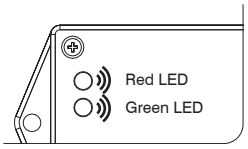

   g. Both LEDs will turn on solid for 1 second.
   Results: The new zero position has been learned.

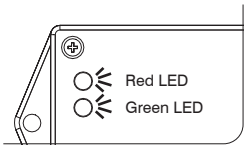

   h. The green LED will flash and then the red LED will turn on solid for 2 seconds.
   Results: The switch is verifying the new zero position.

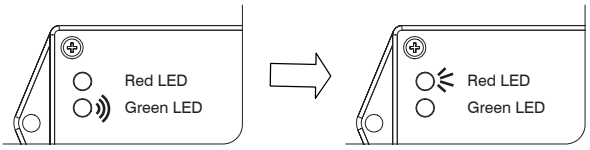

   i. The green LED will turn on solid.
   Results: The switch is ready for normal operation.

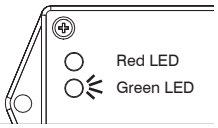

6. Turn the main power disconnect switch to the off position.
7. Push in the emergency stop buttons.
8. Refer to *5.5-3 Tilt Switch Operation*.

5.5-3 Tilt Switch Operation

The following describes the LEDs and what they indicate.

Light Indicators

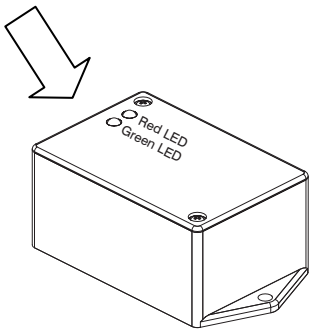

Green LED	**Illuminated whenever both tilt axes are within the specified degrees of the zero/ home learned position. Flashes when transitioning in or out of tilt angle limits, but built in time delay has not fully occurred.**
Red LED	**Illuminated whenever tilt on one or more axes is more than the specified degrees out from the zero/ home position.**
Green & Red LED	**On together, no blinking when fault detected.**

5.6 ZAPI Motor Controller

5.6-1 ZAPI Controller Pin Chart

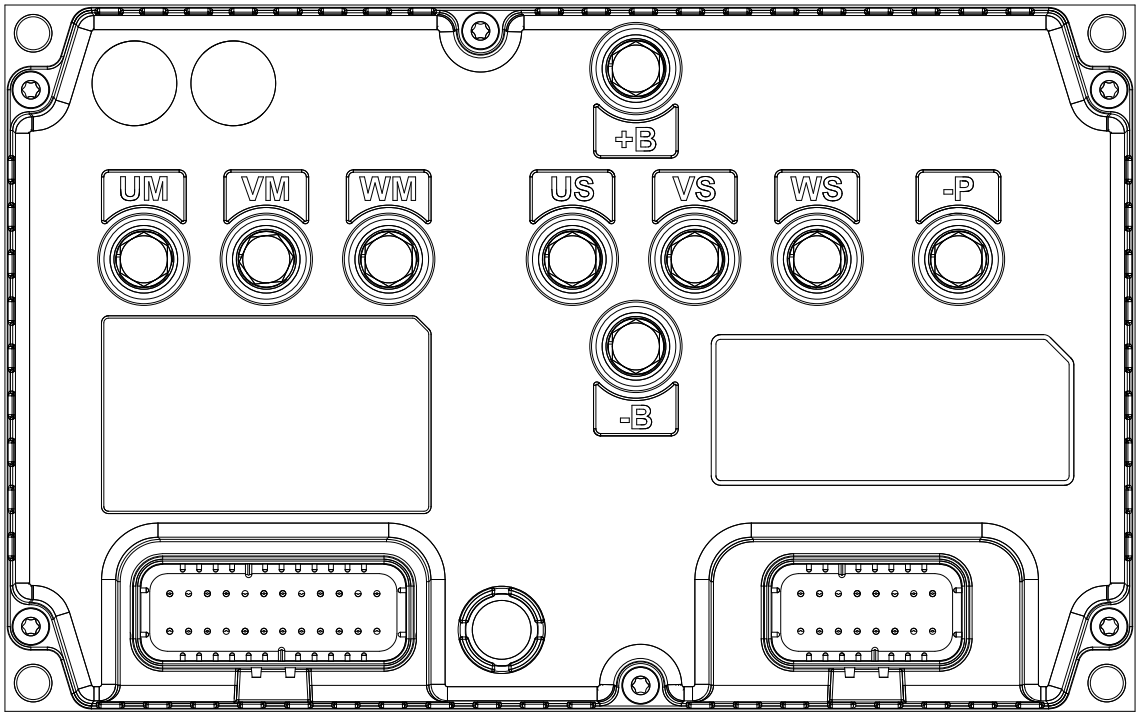

Connector	Pin #	Wire # and Colour	Wire Function
B+		03B Black	Lug for 24V supply voltage (from C1 Motor Contactor via pump motor +)
B-		00 Black	Lug for 0V reference from Battery Negative
P-		(-P Black)	Lug for Output of Pulsed Negative (-) to initialize Pump Motor
US		US Black	Lug for Phase U of Left Traction Motor
VS		VS Black	Lug for Phase V of Left Traction Motor
WS		WS Black	Lug for Phase W of Left Traction Motor
UM		UM Black	Lug for Phase U of Right Traction Motor
VM		VM Black	Lug for Phase V of Right Traction Motor
WM		WM Black	Lug for Phase W of Right Traction Motor

Connector	Pin #	Wire # and Colour	Wire Function
CM1 ZAPI Controller Plug A			
A	1	24 Blue/Black	0V reference Output for Steer Left solenoid Valve 4H-24
A	2	29 Blue/Yellow	0V reference Output (pulsed) for Beeper BP-29
A	3	08C Purple/White	24V Input B+ from S10 Idle/PLTF/Base Key switch for Platform Signal
A	4	08L Purple/White	12V Output B+ Supply for LS1 Mast Position Limit switch, BP-29 Beeper, and Left Motor Speed Sensor
A	5	Not used	
A	6	Not used	
A	7	08 Purple/White	24V Input B+ from Platform E-Stop for Platform signal
A	8	37 Green/White	24V Input for Charger Cutout Interlock switch (ON when not charging)
A	9	CHAR Blue/White	Input from Channel A signal from Right Motor Speed Sensor
A	10	08R Purple/White	12V Output B+ Supply for Right Motor Speed Sensor
A	11	Not used	
A	12	Not used	
A	13	03C Green/Purple	24V Input B+ Supply from C1 Motor Contactor closed thru CB2 Circuit Breaker (supply power for Solenoid coils)
A	14	Not used	
A	15	00L White	0V reference for Left Motor Speed Sensor, and Temperature Sensor
A	16	Not used	
A	17	CHAL Blue/White	Input from Channel A signal from Left Motor Speed Sensor
A	18	CANL Green	Communication CANBus Low
A	19	CHBL Blue	Input from Channel B signal from Left Motor Speed Sensor
A	20	CHBR Blue	Input from Channel B signal from Right Motor Speed Sensor
A	21	00R White	0V reference for Right Motor Speed Sensor, and Temperature Sensor
A	22	Not used	
A	23	19A Orange/Black	Ground output from Telematics (option)
A	24	23 Black/White	0V reference Output for Steer Right solenoid Valve 4H-23
A	25	14 Black	0V reference Output for Lift solenoid Valve 3H-14
A	26	13B Orange	0V reference for Lower solenoid Valve 2H-13
A	27	19 Orange/Black	0V reference for C1 Motor Contactor
A	28	30R Blue/Red	0V reference for Right Motor BK1 Brake
A	29	13 Orange	24V Output for Lower solenoid Valve 2H-13
A	30	30L Blue/Red	0V reference for Left Motor BK1 Brake
A	31	CANH Yellow	Communication CANBus High
A	32	TMPR Black/White	Input signal from Right Motor Temperature Sensor
A	33	TMPL Black/White	Input signal from Left Motor Temperature Sensor
A	34	Not used	
A	35	Not used	

Connector	Pin #	Wire # and Colour	Wire Function
CM1 ZAPI Controller Plug B			
B	1	Not used	
B	2	14A Black	24V Input from S2 Lift/Lower switch for RAISE signal
B	3	21 Blue/Red	12V Input from LS1 Mast Position Limit Switch for Elevated/Stowed signal (ON for Elevated)
B	4	Wire 28, Green/Red	12V input from tilt switch Pin 2. 12V when level
B	5	Not used	
B	6	13A Orange	24V Input from S2 Lift/Lower switch for LOWER signal
B	7	10 Blue/White	24V Input B+ from S10 Idle/PLTF/Base Key switch for Base Signal
B	8	19B Green/Black	24V Input from S5 Diagnostic Switch for Service Enable signal
B	9	Not used	
B	10	Not used	
B	11	30 Blue/Red	24V Input from S6 Brake Release Switch for Manually Releasing Brake signal (ON for Release)
B	12	07 Red	24V Input from S10 Idle/PLTF/Base Key switch for Platform signal
B	13	Not used	
B	14	Not used	
B	15	Not used	
B	16	Not used	
B	17	Not used	
B	18	60 Black/Green	0V reference Output (pulsed) for PL-2 Power On LED of S28 Emergency Stop switch
B	19	03C Green/Purple	24V Input B+ Supply from C1 Motor Contactor closed thru CB2 Circuit Breaker (supply power for Solenoid coils)
B	20	22 Orange/Blue	0V reference Output (pulsed) for FL-1 Flashing Light(s)
B	21	49 Green	0V reference for H1 Horn
B	22	30A Blue/Red	0V reference for 30ACR Brake Relay
B	23	Not used	

5.6-2 Flash the controller software

Connect the handheld device to the base control console harness

1. Download the updated software flies to a USB flash drive.
2. Raise the platform so there is enough room to open the service hatch on the base.
3. Turn the main disconnect switch to the off position.
4. Push the emergency stop buttons on the base control console.
5. Open the service hatch on the base.
6. Connect the 6-pin end of jumper **234289** to the handheld device.

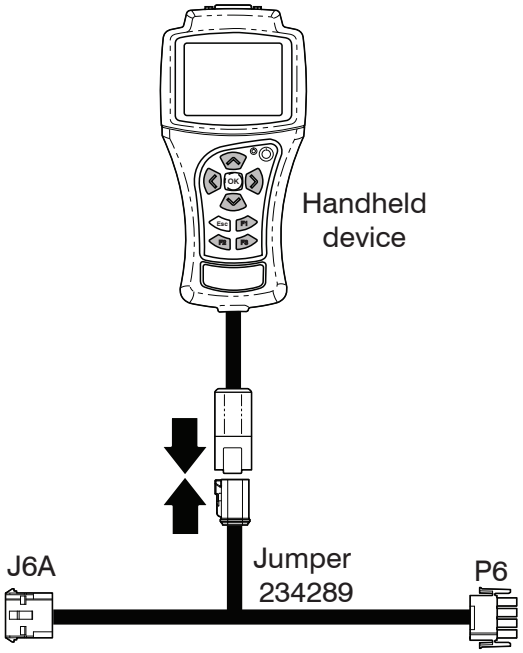

7. Locate the 6-pin connector J6 near the back of the display on the base control console.
8. If Elevate telematics is installed on your MEWP, disconnect the telematics harness connector P2 from connector J6.

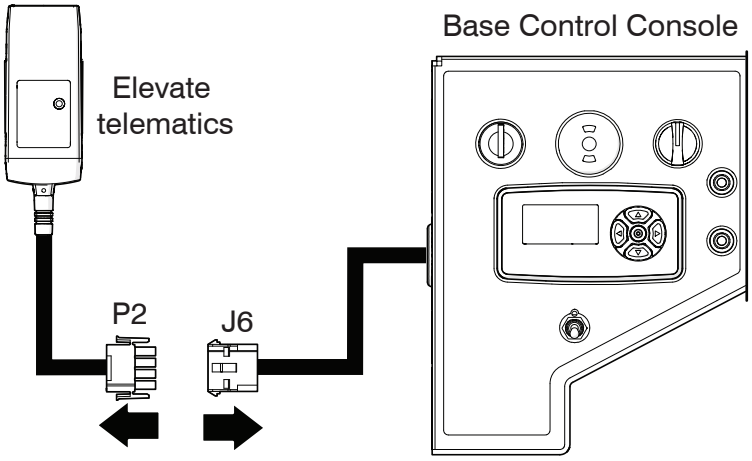

9. Connect the P6 end of the handheld device jumper to the J6 connector.
10. If Elevate telematics is installed on your MEWP, connect the J6A end of the jumper to the telematics harness connector P2.

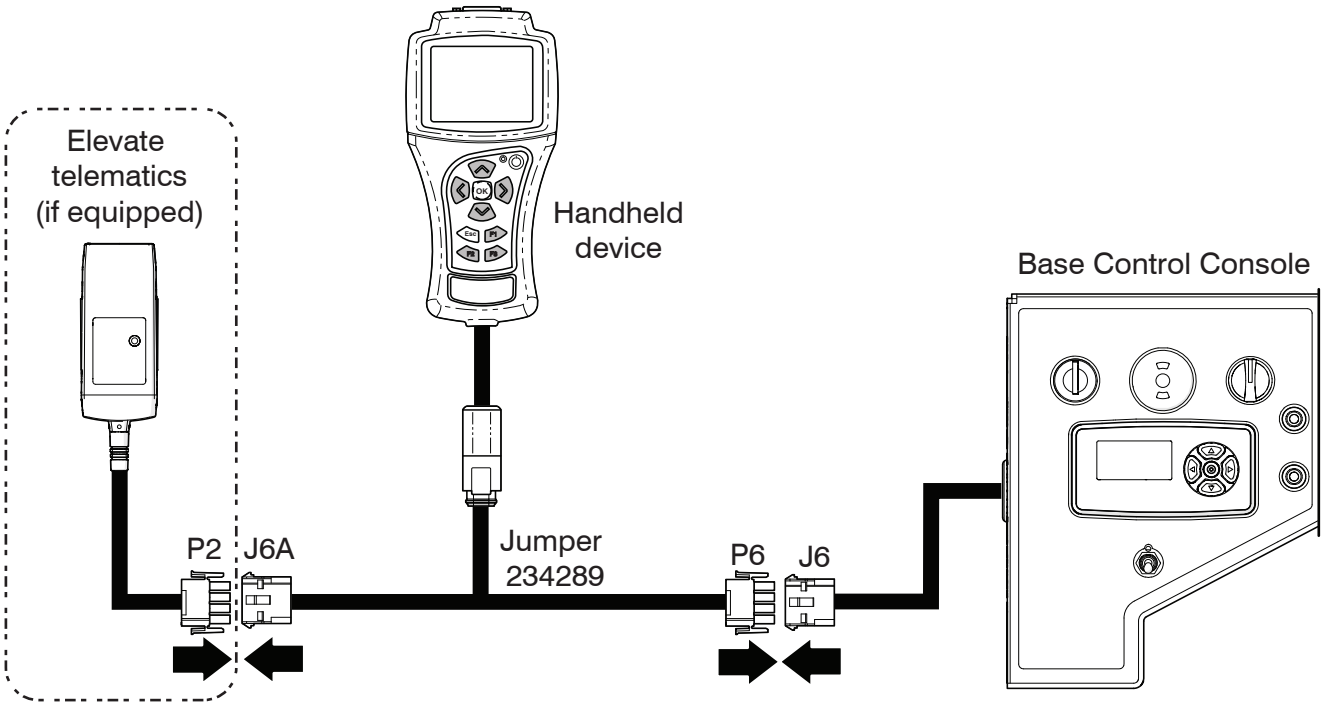

11. Turn the main power disconnect switch to the on position.
12. Pull the emergency stop button on the base control console.
13. Turn the key switch to the platform position.

Go to the next page.

Update the software

1. Insert the USB flash drive into the bottom of the handheld device.

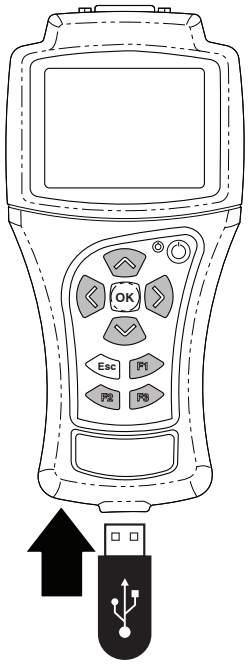

2. Enter "1275" when prompted to enter the password on the INSERT PASSWORD screen. Press the UP or DOWN button to change the value of the number. Press the RIGHT or LEFT button to go to the next field. Press OK to enter the password.

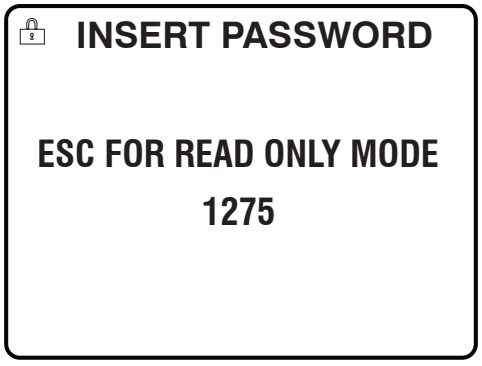

3. Select CONSOLE UTILITIES on the main menu and press OK.



4. Under the UTILITIES MENU, select INVERTER FIRMWARE UPDATE and press OK.

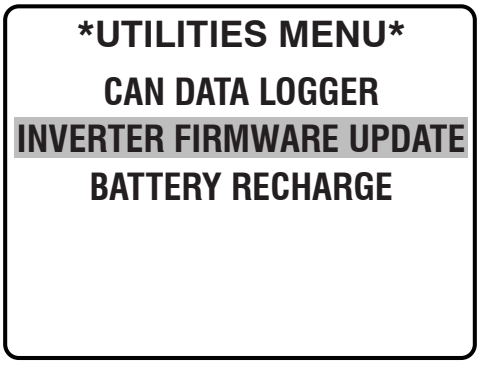

5. If a USB storage is already plugged in, wait for the next screen to appear.

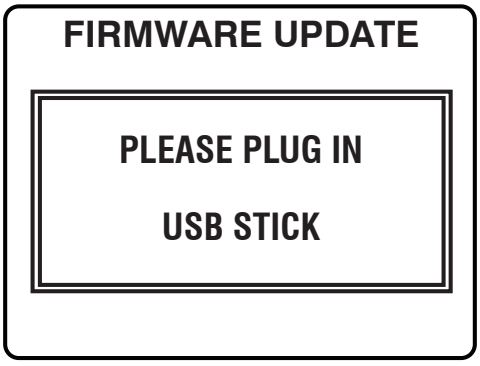

6. There will be two files in the USB with the z86 extension.
7. Select the Main file and press OK.
   - dem_afq_XXXXXXX.z86 - Main file

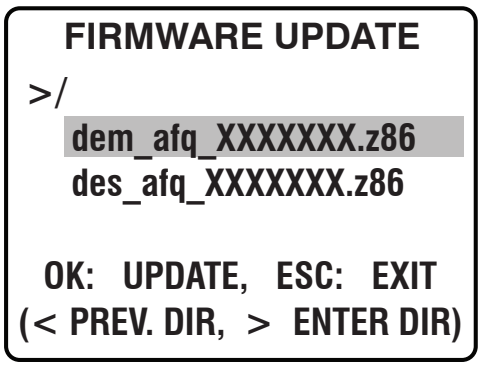

8. Make sure the CAN Baud rate is 250 Kps and BASE NODE is either 14 or 18 and press OK.

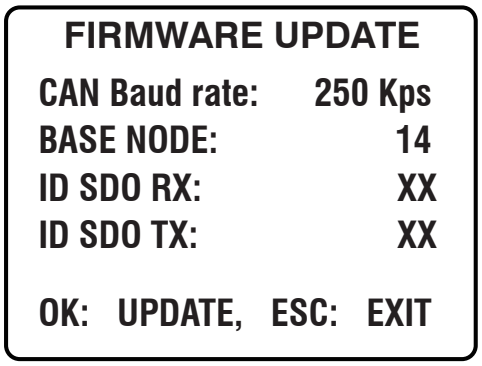

9. Wait until the upgrade is finished, then press ESC.
10. If the ESC key doesn't work, push and pull the emergency stop button on the base control console.

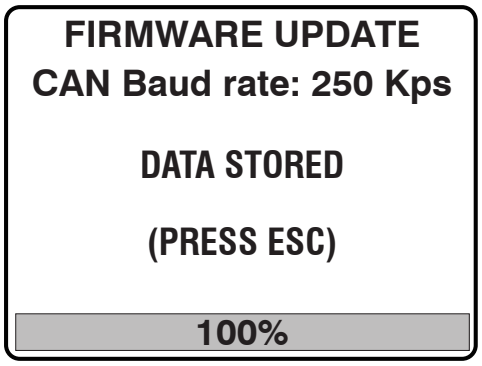

11. The handheld device goes back to the UTILITIES MENU.
12. Do steps 7 to 10 again but select the secondary z86 file.
    - des_afq_XXXXXXX.z86 - Secondary file

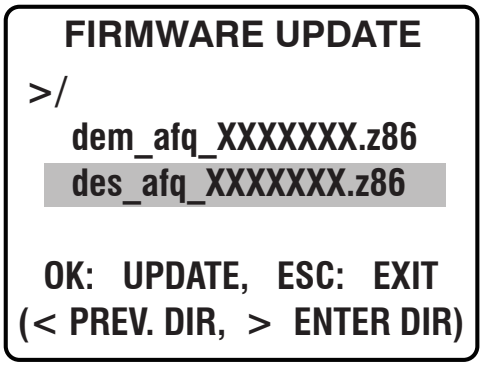

13. When the update is done, push and pull the base e-stop button to cycle the power to the MEWP and save the changes.
14. Push the emergency stop on the base control console.
15. Turn the main disconnect switch to the off position.
16. Disconnect the handheld device jumper from the main harness and from the Elevate telematics, if equipped.
17. If equipped, connect the telematics connector P2 to connector J6 from the base control console.

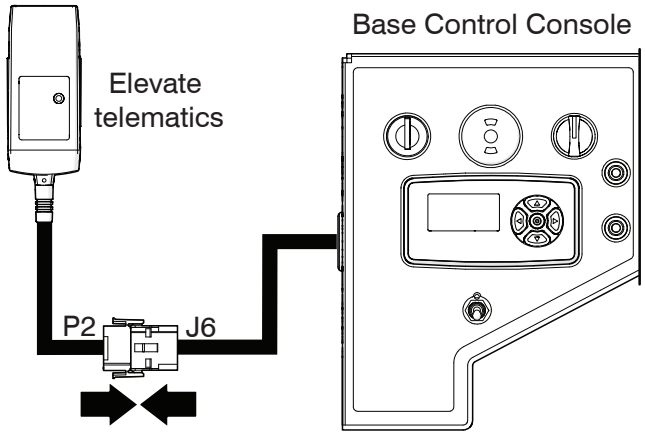

5.7 Skycoded display identification

5.7-1 About the display

⚠ WARNING

Only trained and authorized personnel are permitted to service a MEWP.

⚠ WARNING

Read all instructions closely before attempting each phase of the calibration procedure.

The Skycoded display is located on the rear right side of the MEWP with the base controls. The default display view shows the battery charge, hour meter, and traction speed.

Use the Skycoded display to calibrate, diagnose issues, and adjust or set options and parameters.

5.7-2 Identification

Your MEWP has one of two possible Skycoded display modules. The modules are referred to as **Skycoded Display A** and **Skycoded Display B** (or **Skycoded A** and **Skycoded B**) throughout Section 5 of this manual.

Identify which display module is installed on your MEWP, and refer to the specific section of this manual for the applicable flowcharts and procedures.

Skycoded Display A has 5 small red indicator lights along the bottom of the module. **Skycoded Display B** does not have any indicator lights along the bottom.

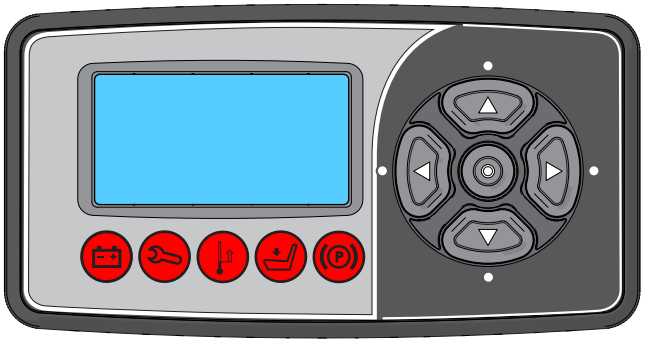

Skycoded Display A



Skycoded Display B

Go to *5.8 Skycoded display A* for **Skycoded Display A** flowcharts and procedures.

Go to *5.9 Skycoded display B* for **Skycoded Display B** flowcharts and procedures.

Look for these symbols on the pages to help determine if you are looking at information for display A or B.

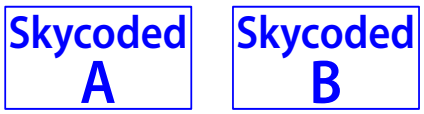

5.8 Skycoded display A

5.8-1 Skycoded display A controls

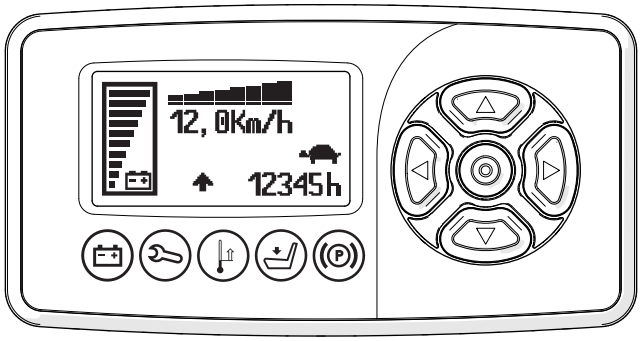

Symbol	Key Function
	**ENTER Button** Choose the current selection or save the changes.
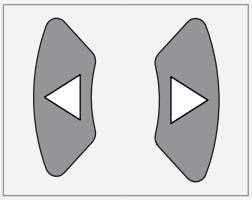	**LEFT Button** Go back to the previous menu or move the cursor to the left. **RIGHT Button** Move the cursor to the right.
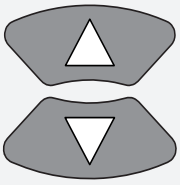	**UP/DOWN Buttons** Scroll through the display menu or change the value.
	Not used.
	Active fault (ON when machine detects a fault).
	Not used.
	Enable (OFF when enable is active).
	Brake active (ON when brake is engaged)

5.8-2 Main menu overview

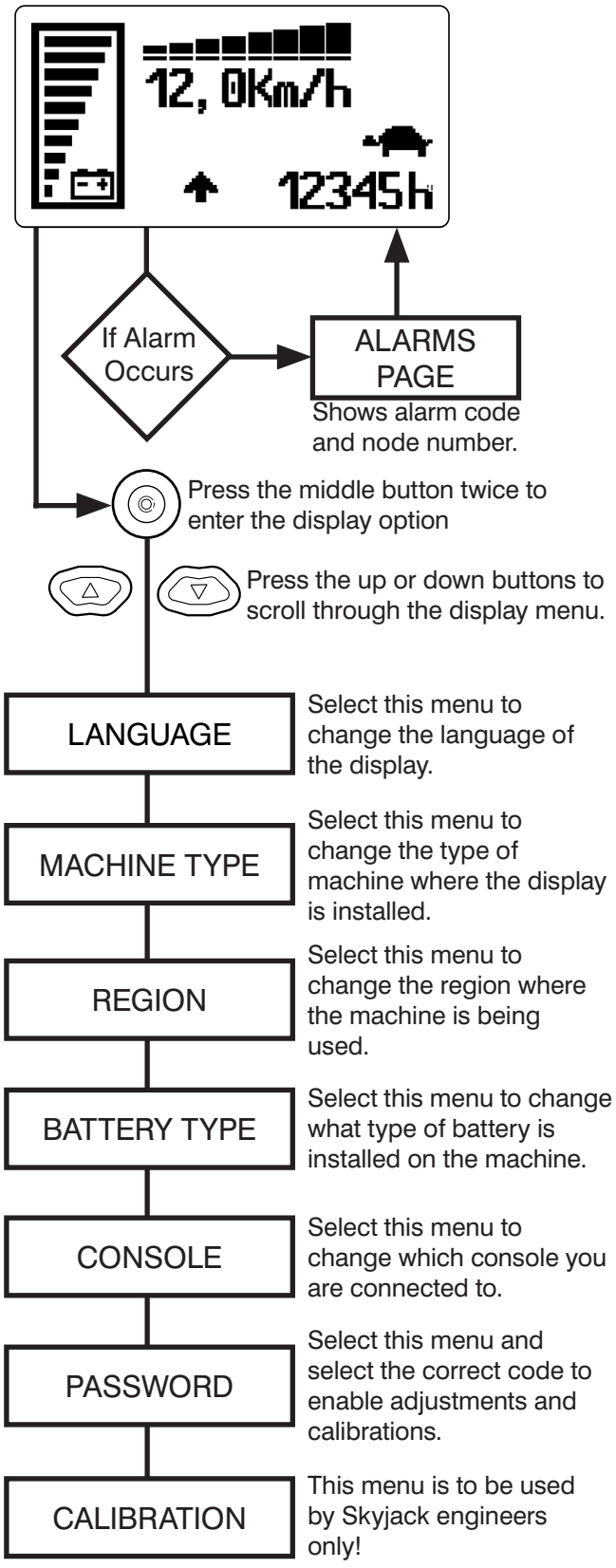

5.8-3 Language menu

Skycoded A

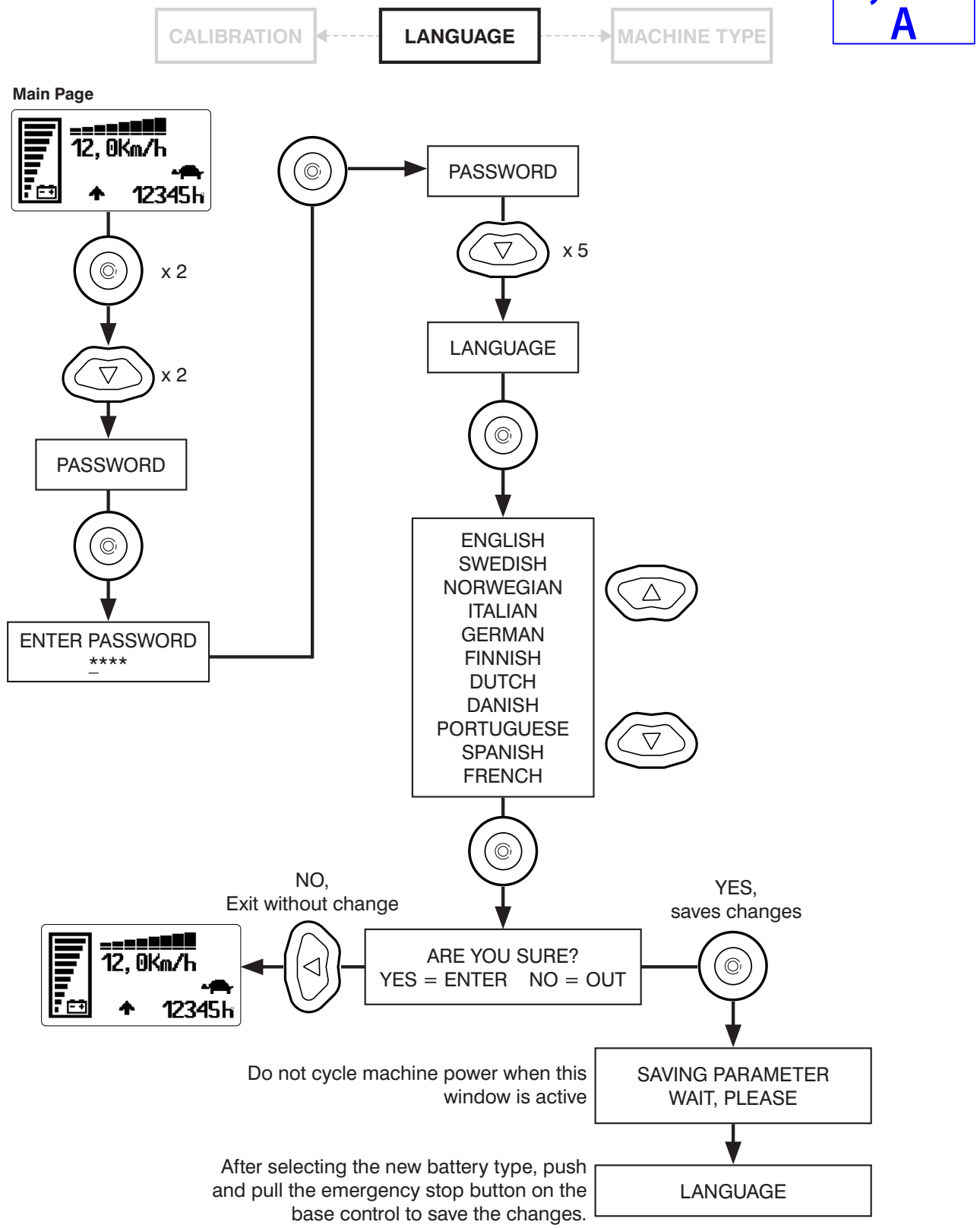

5.8-4 Machine type menu

Skycoded A

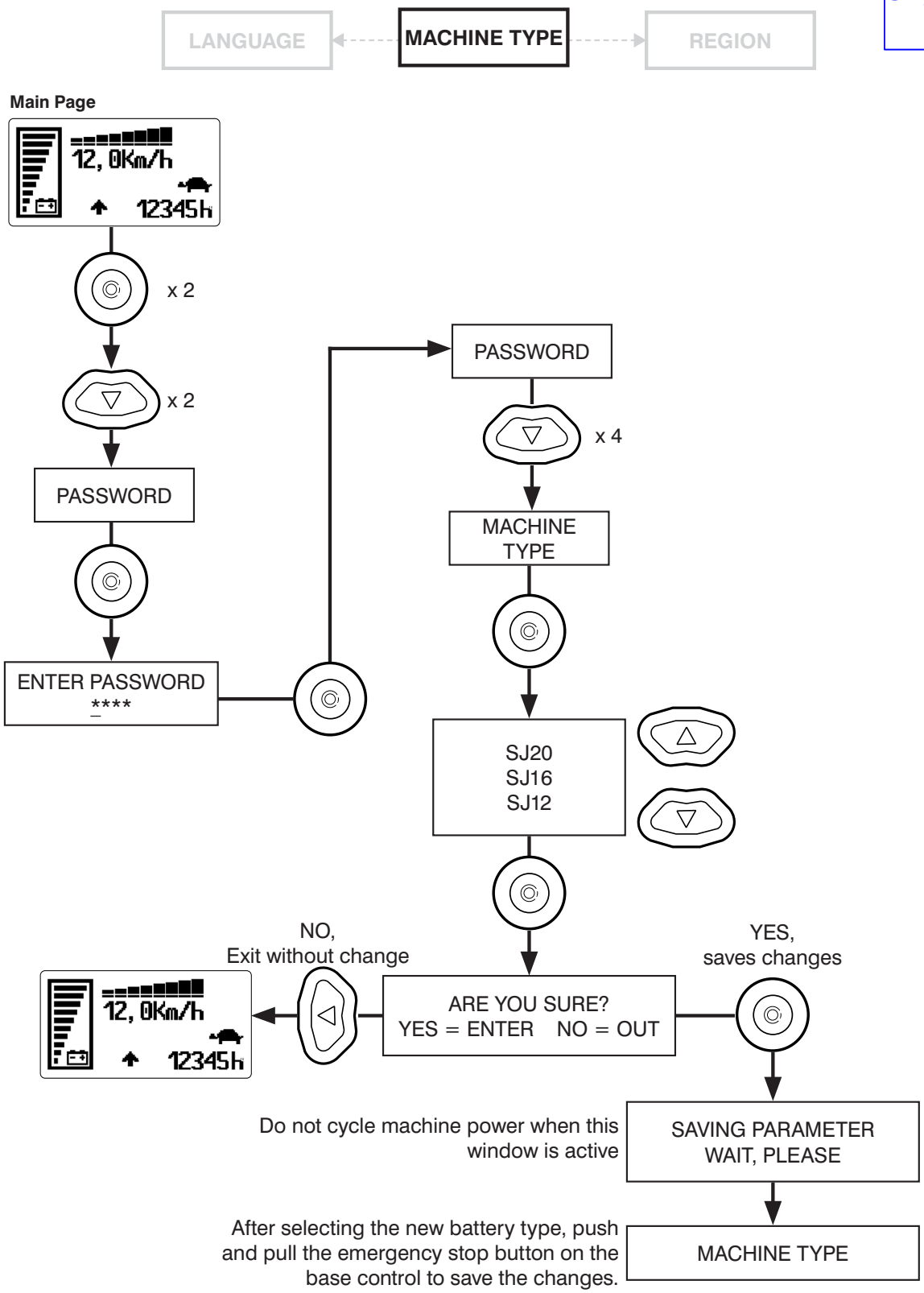

5.8-5 Region menu

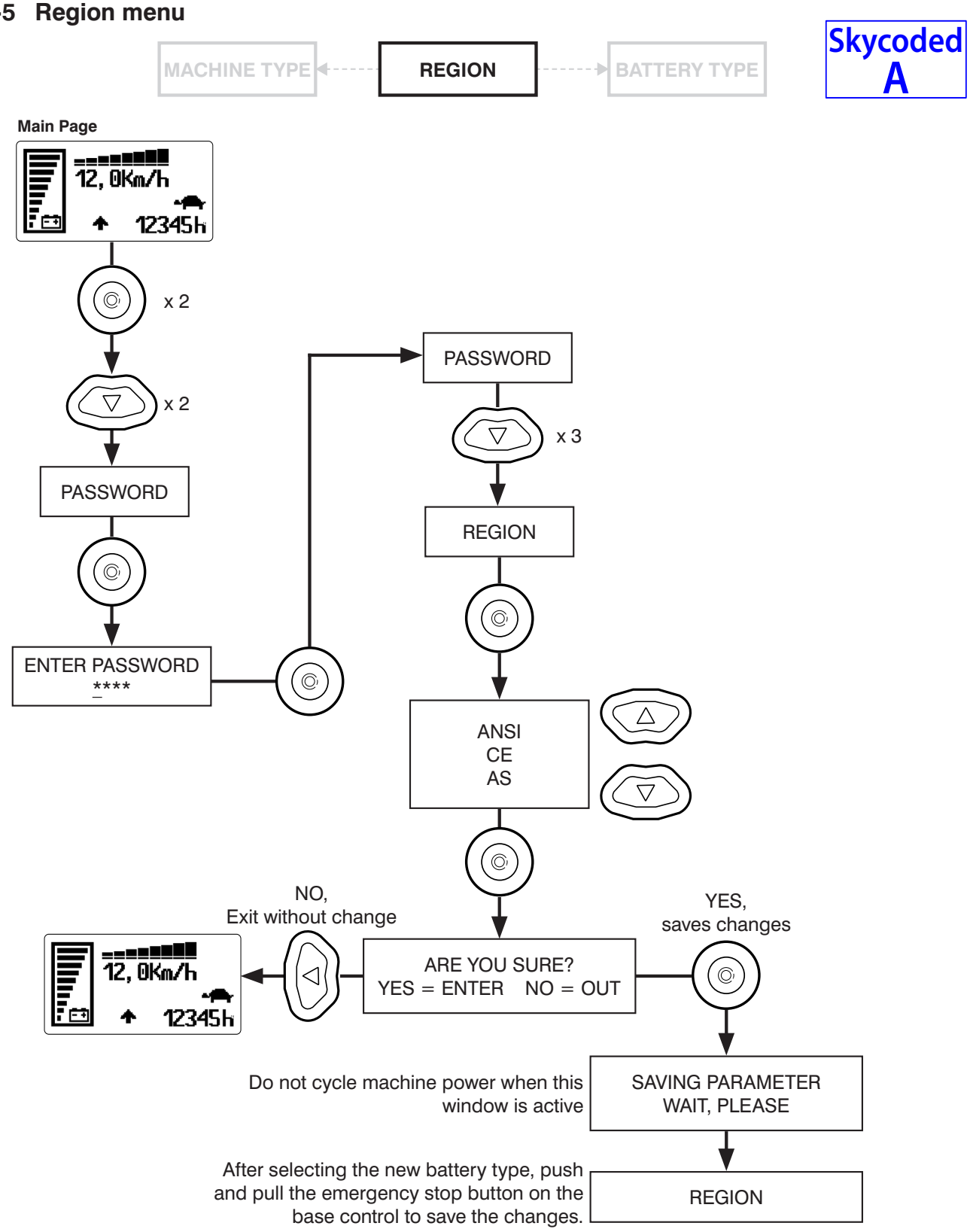

5.8-6 Battery type menu

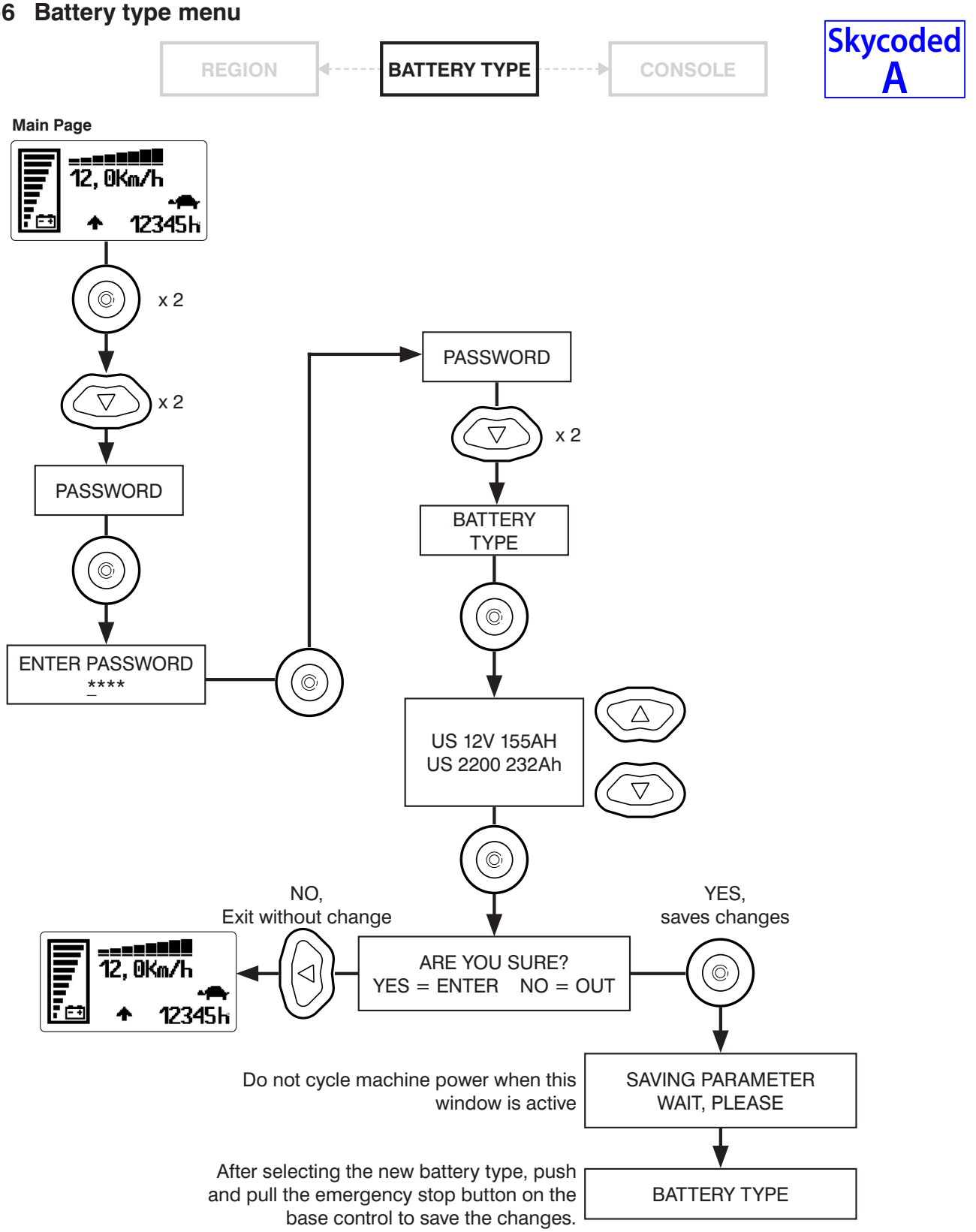

5.8-7 Console menu

Skycoded A

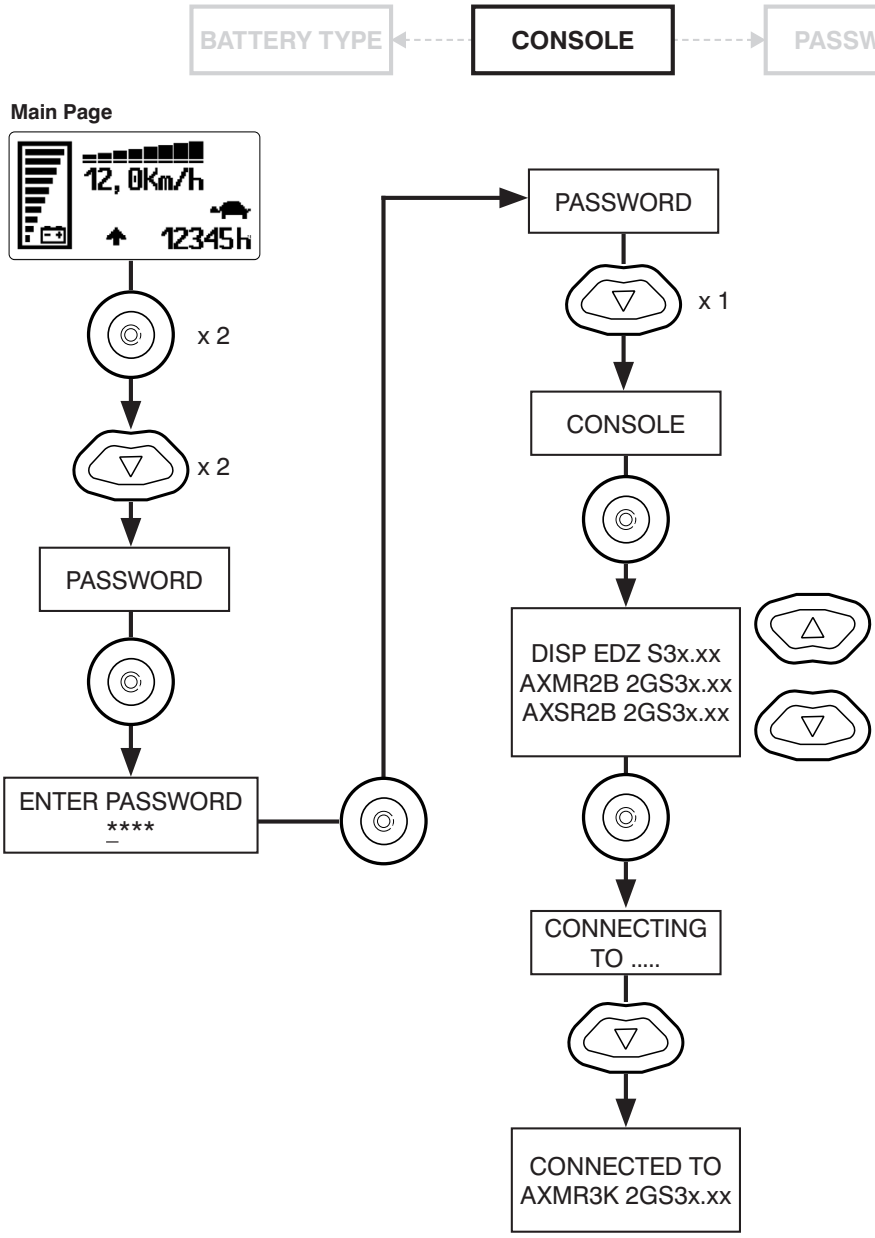

See 5.8-8 Access flowchart menu

5.8-8 Access flowchart menu

Skycoded A

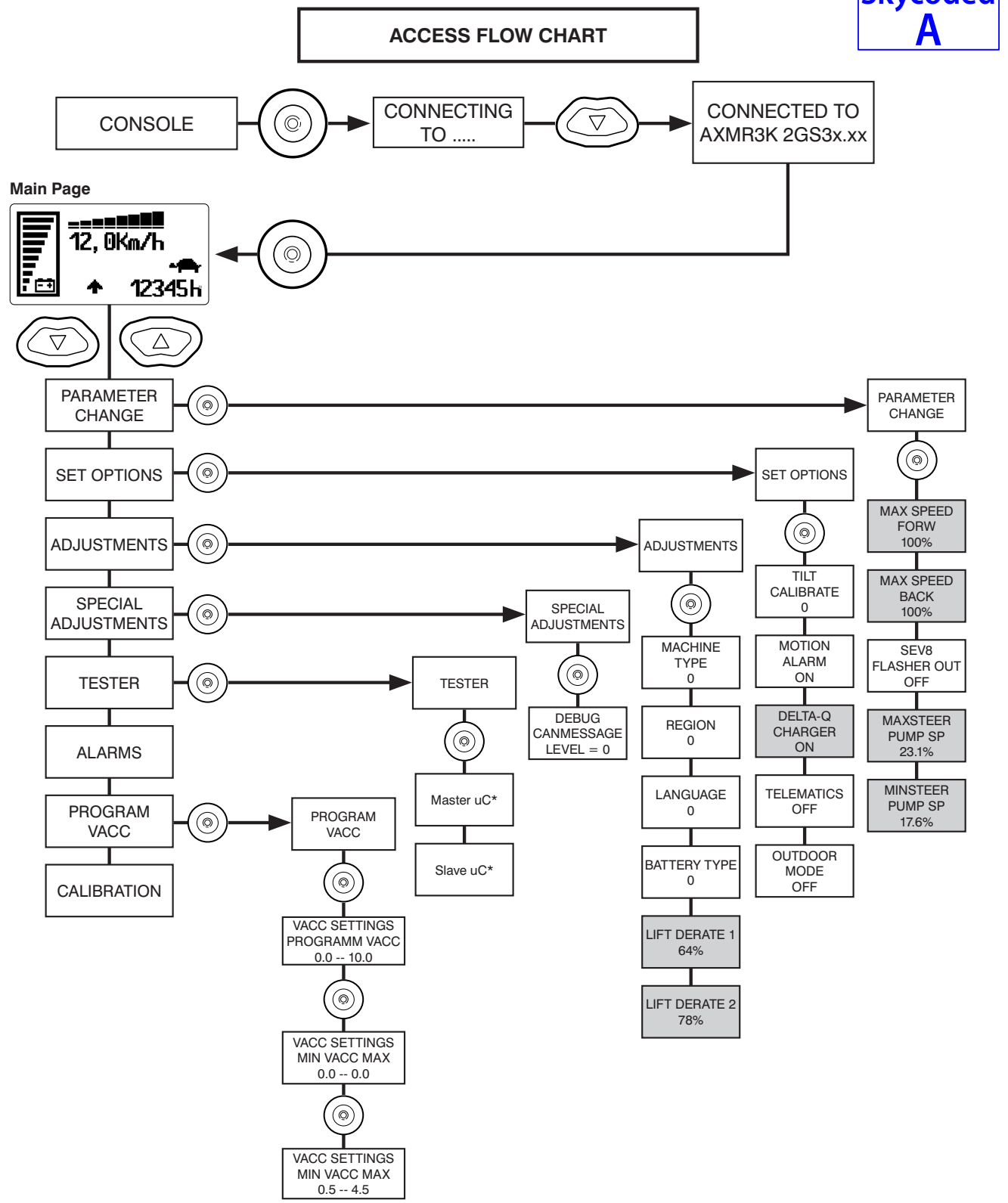

*See *5.8-15 Skycoded A tester menu - master uC* and *5.8-16 Skycoded A tester menu - slave uC*.*

5.8-9 Password menu

Skycoded A

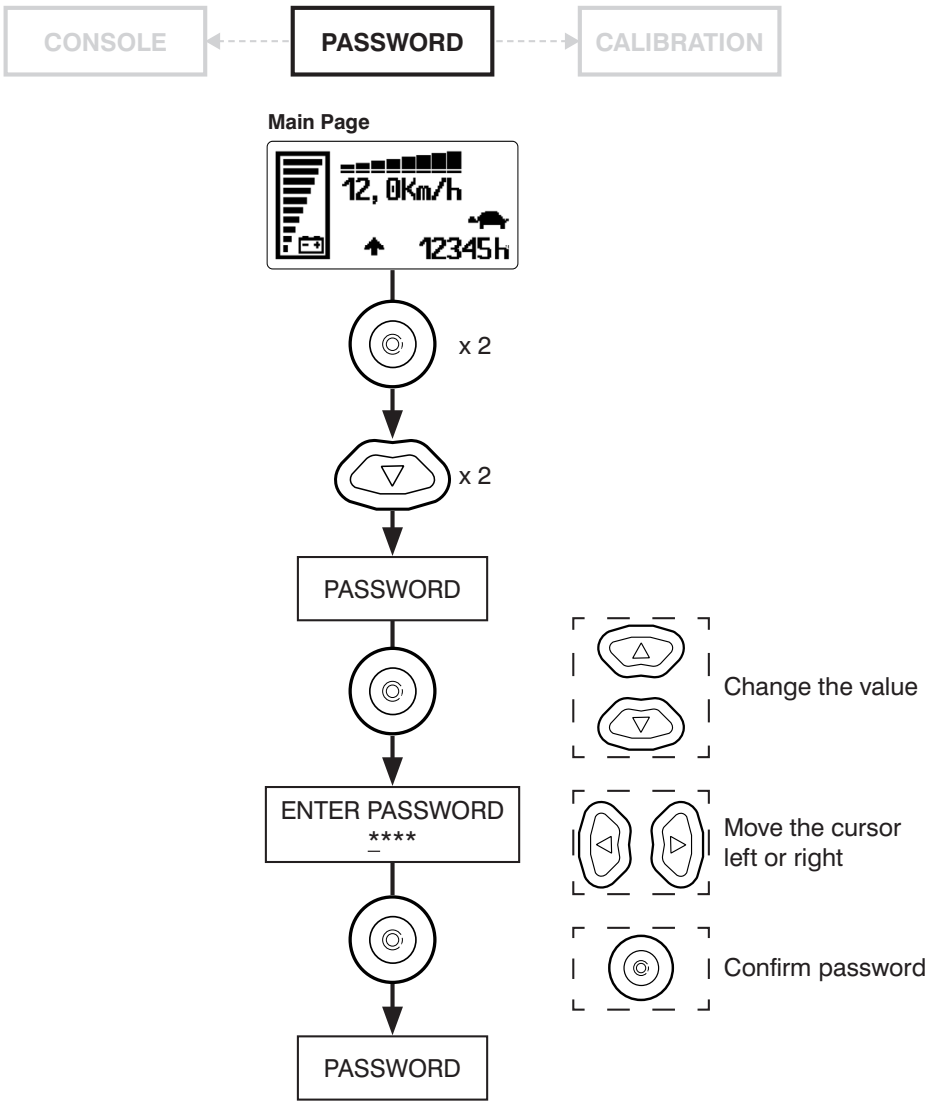

IMPORTANT

To remove the password access, push and pull the emergency stop button on the base control or enter an incorrect value into the password menu

5.8-10 Calibration menu

Skycoded A

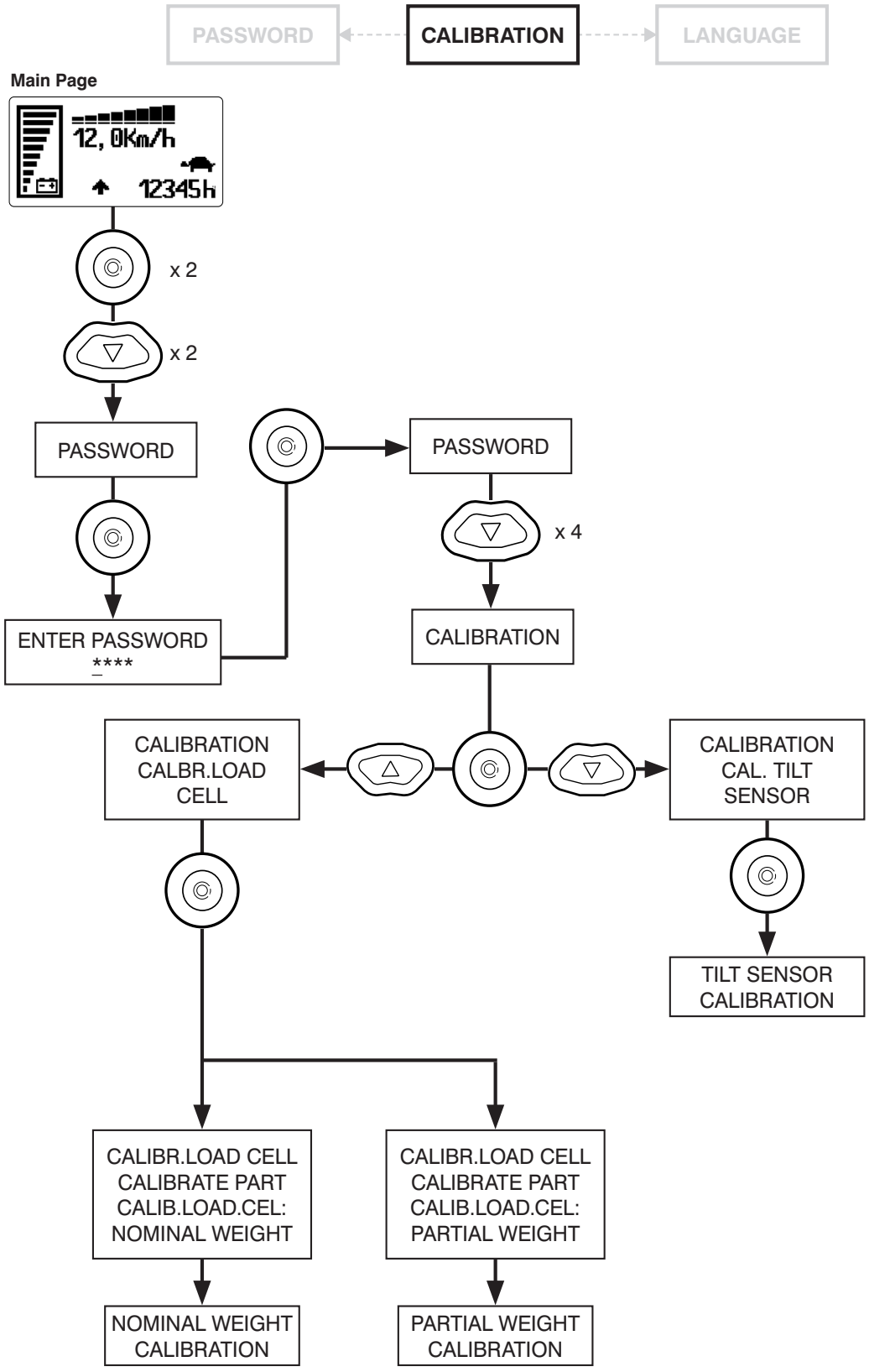

5.8-11 Tilt sensor calibration menu

Skycoded A

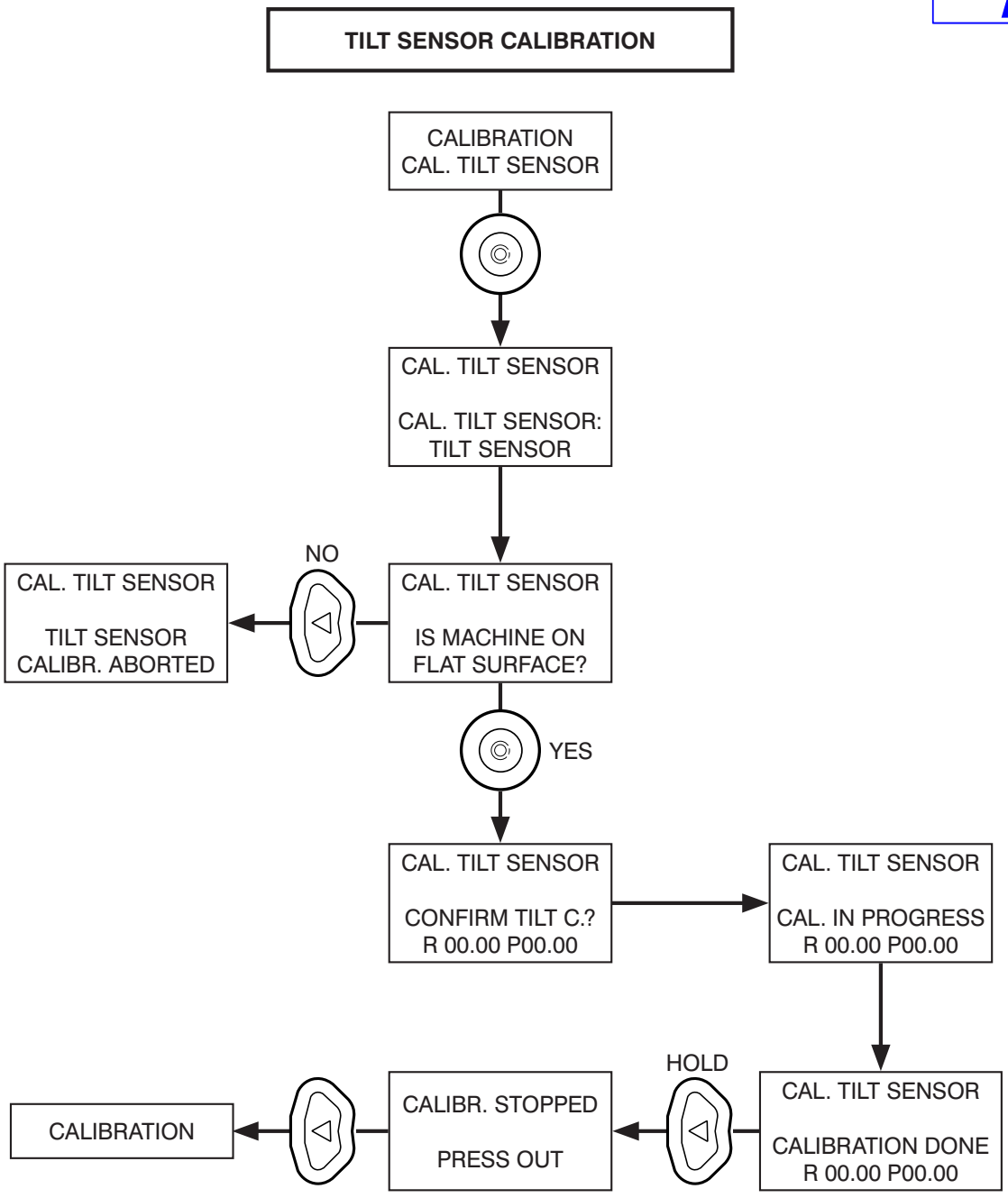

5.8-12 Load cell nominal weight calibration menu

Skycoded A

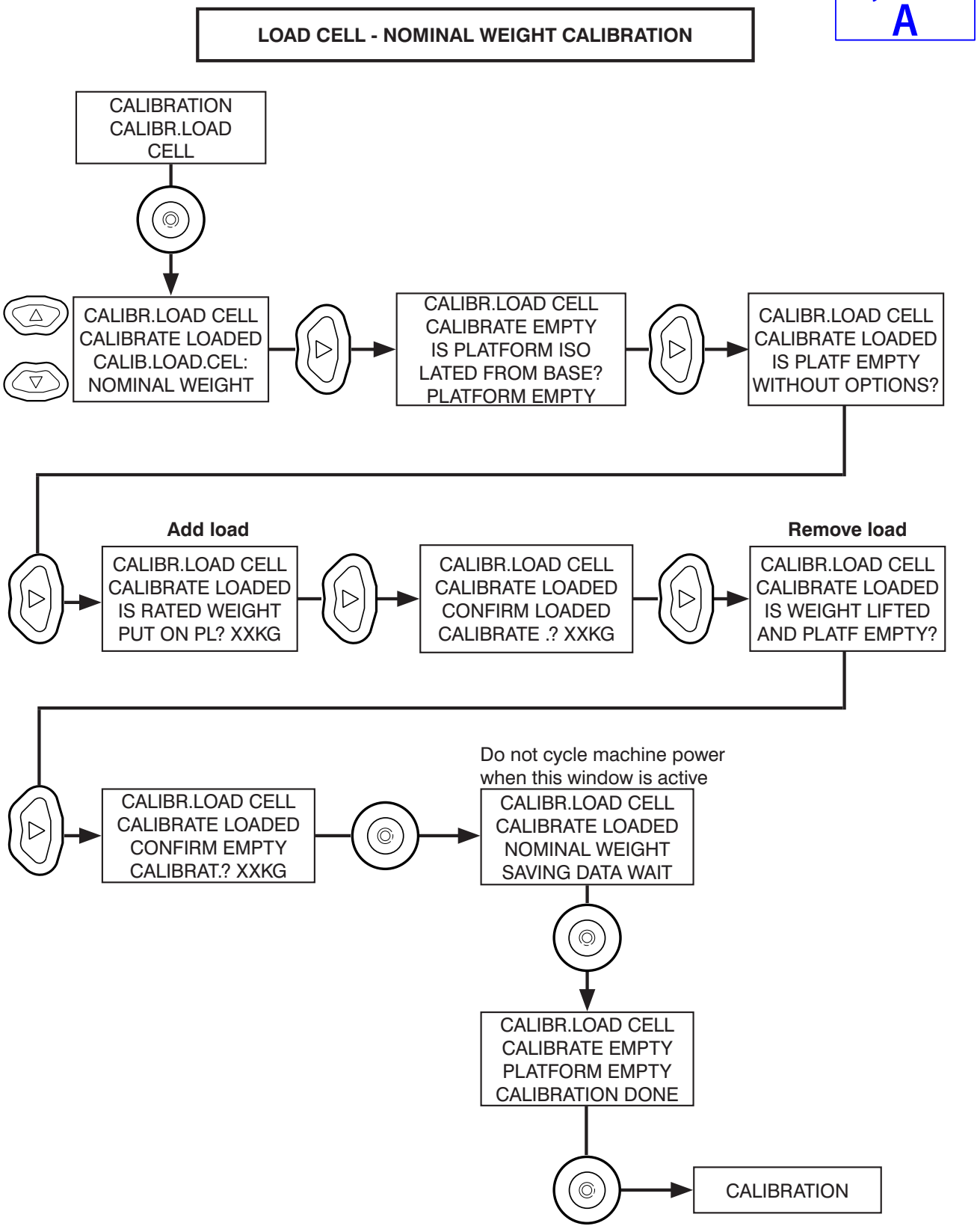

5.8-13 Load cell partial weight calibration menu

Skycoded A

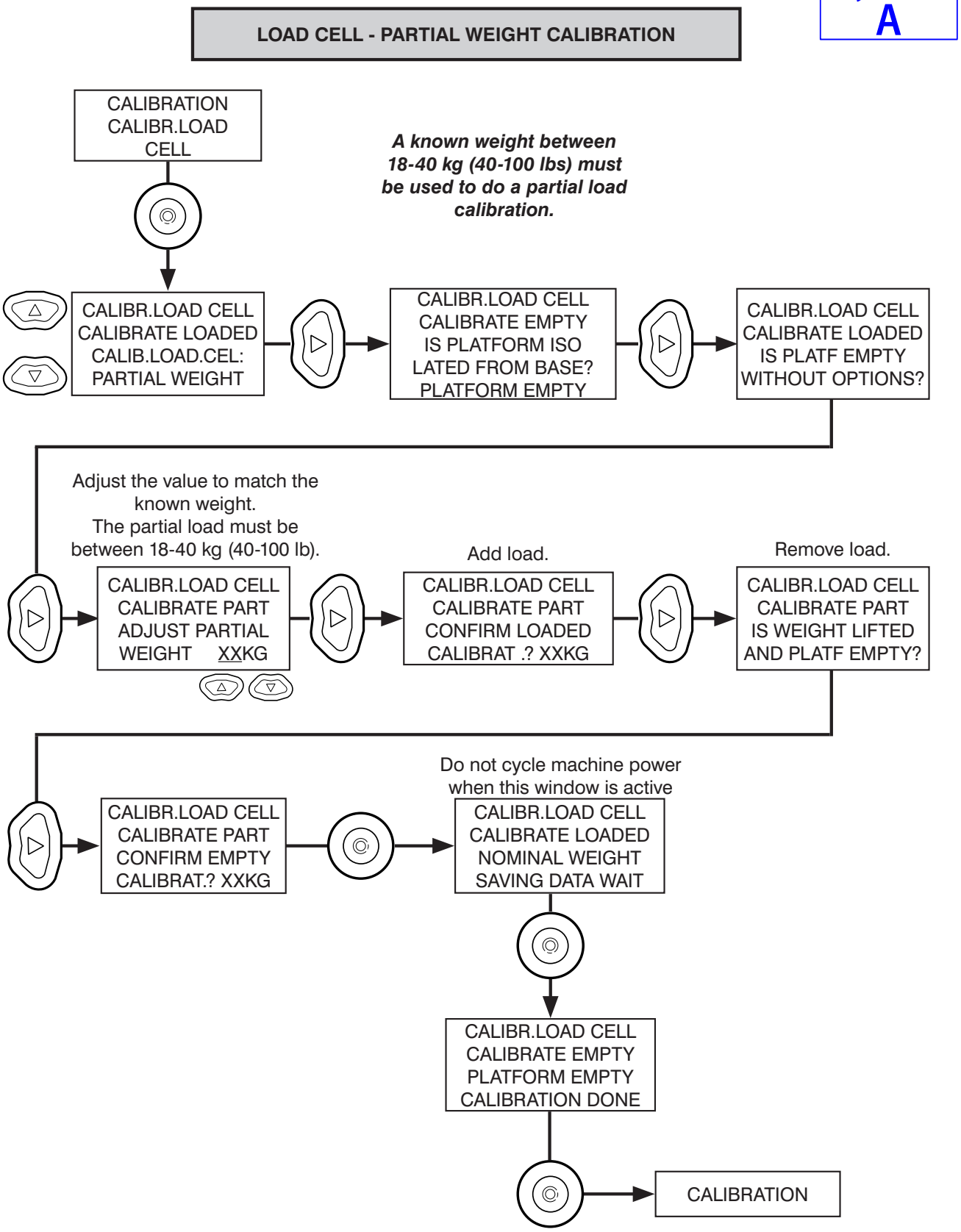

5.8-14 Skycoded A error codes

Skycoded A

Diagnostics

The display module shows the machine condition and operating information during operation.

Alarms Visualisation

When an alarm condition occurs, the display module gives the information that shows the alarm code and the module in which the alarm occurred.

For example:

M181-M2_ERR
S181-M2_ERR

- M181-M2_ERR - This means that the alarm has been generated by the Master Uc
- S181-M2_ERR - This means that the alarm has been generated by the Slave Uc

Code	Code String	SubCode	Cause	Troubleshooting
8	8-CTRL ERR		Controller internal error. Cycle the power. If still present, replace the controller.	Replace the controller.
17	17-CTRL ERR		Controller internal error. Cycle the power. If still present, replace the controller.	Replace the controller.
18	18-CTRL ERR		Controller internal error. Cycle the power. If still present, replace the controller.	Replace the controller.
19	19-CTRL ERR		P1 pin 3 detect low voltage, check wire connection and power cable voltage.	Check power cable connections P- and B+ are not swapped. Could be internal to controller or internal damage to wire A3 (continuity might be OK, but cannot hold high amp).Replace harness.
28	28-M2 VLOW		Pump motor voltage lower than expected.	Check power cable connection and leakage between motor and motor frame.
29	29-M2_VHI		Pump motor voltage higher than expected.	Check power cable connection and leakage between motor and motor frame.
30	30-DRV_VLOW		Traction motor voltage lower than expected.	Check power cable connection and leakage between motor and motor frame.
31	31-DRV_VHI		Traction motor voltage higher than expected.	Check power cable connection and leakage between motor and motor frame.
37	37-C1 CLOSE		Power to contactor is properly connected, but contactor stuck closed.	Check condition of the contactor.
38	38-C1 OPEN		Power to contactor is properly connected, but contactor is stuck open.	Check power cable connection and leakage between motor and motor frame.
52	52-M2 AMP LOW		Pump motor running current is lower than commanded.	Check pump power cable connection.

5.8-14 Skycoded A error codes

Code	Code String	SubCode	Cause	Troubleshooting
53	53-M2 AMP HI		Pump motor running current is higher than commanded.	Check pump power cable connection.
60	60-CTRL ERR		Controller internal error. Cycle the power. If still present, replace the controller.	Cycle the power.If the fault is still there, replace the controller.
62	62-CTRL TEMP		Controller internal temprature is too high. Exceeding 85 °C.	Check the tester menu DRIVE-CONTROLLER TEMP.If temp is incorrect, replace controller. Allow the controller to cool if hot. If the fault occurs when the controller is cold, replace the controller.
65	65-M2 TEMP		Traction motor temp is too high.	Check tester menu DRIVE-MOTOR TEMP.If temp is incorrect, replace the motor.
66	66-LOW BATT		Battery state of charge is lower than 10%. Check battery voltage.	Check the condition of the batteries and charge.
74	74-CTRL ERR		Controller internal error. Cycle the power. If still present, replace the controller.	Cycle the power.If the fault is still there, replace the controller.
75	75-CTRL ERR		Controller internal error. Cycle the power. If still present, replace the controller.	Cycle the power.If the fault is still there, replace the controller.
78	78-JSTK VERR		Check the joystick.	Replace the joystick.
79	79-ENABLE ERR		Joystick is active before enable engaged, or brake failed to disengage.	Release the enable switch.Repeat the command with the correct sequence. Check the joystick enable switch is not faulty. Try to release the brakes manually to see if the brake is able to release. Check the condition of the brake circuit.
80	80-JSTK ERR		This error occurs when both FW and BW are active at same time.	Check joystick.
123	123-LOWER SHRT -		Short to B- detected at A29.	Check wiring on pin A29. Short to B- detected.
124	124-HEIGHT_ ERRXX	HEIGHT ERR S01	Not at right height.	Check string pot and string pot wiring.
		HEIGHT ERR S02	No can signals from string pot or string pot does not change reading.	
		HEIGHT ERR S04	Out of range .	
125	125-HEIGHT_ ERRXX	HEIGHT NO MSG 24	CAN Open.	Check string pot and string pot wiring.
		HEIGHT NO MSG 25	CAN Error.	
		HEIGHT NO MSG 24	CAN Error.	

5.8-14 Skycoded A error codes

Code	Code String	SubCode	Cause	Troubleshooting
126	126-HEIGHT_ ERRXX	OUTDOOR MODE 01	Machine is at Maximum Outdoor Height. Lifting is inhibited.	Lower the platform.
		OUTDOOR MODE 02	Machine at Overheight. Lifting and Driving is inhibited. Outdoor switch is active overheight.	Lower the platform below the over height threshold.
127	127-LOAD_ ERRXX	LOAD ERR 28	Loadcell malfunction .	Check the wirings and the load cell.
		LOAD ERR 29		
		LOAD ERR 2A		
		LOAD ERR 2C	Loadcell malfunction or open connection .	Check loadcell junction box or check the wirings and the load cell.
		LOAD ERR 2D		
128	128-LOAD_ERR		Loadcell open from junction box.	Check the loadcells.
129	129-JSTK ERR		Joystick failed, no CAN heartbeat.	Replace the joystick.
130	130-BRK1_ERR		Emergency brake released.	Emergency brake release is active, exit Tow mode to clear. Enable any function to clear.
131	131-AO ON		Antioverraise is triggered, no lifting allowed.	Lower the platform (KC only option).
132	132-AO ERR		Antioverraise signal from normally open/ close are the same, check wiring.	Check limit switch wiring on the anti overrise option (KC only option).
133	133-TELEMATIC		Telematic interlock, no password, or lost CAN communication from telematic device.	Enter correct PIN password (if equipped). Check wiring and condition of the telematics.
134	134-LOW BATT		Battery voltage is too low to drive for more than 3 sec, Lead acid battery - 15.8V, AGM - 19V.	Check the condition of the batteries and charge.
135	135-OVER TILT		Machine over climbing range (too steep).	Check the calibration of the internal tilt sensor while the module is flat and level. Replace the controller.
136	136-LOAD ERR 0X		The values from the loadcells are wrong (negative reading).	Check loadcell wiring and junction box.
137	137-CHARGER CAN		Charger does not send startup CAN message. Need to plug in charger at least 15 sec to initilize charger.	Verify the charger is connected and powered on for a minimum of 15 seconds. Verify the charger CAN communication. Check the wiring.
138	138-SERVICE		Platform deck is extended in the service position.	Check correct operation of service position limit switch.
139	139-PL EXT		Platform deck is in extended position. Limit switch is open (deck is in extended position). Drive disabled.	Check the condition of the deck extension limit switch and wiring.

5.8-14 Skycoded A error codes

Code	Code String	SubCode	Cause	Troubleshooting
140	140-LOW BATT		Battery voltage is too low to lift for more than 3 sec, Lead acid battery - 18.8V, AGM - 21V (Lift disabled)	Check the condition of the batteries and charge.
141	141-TILT ERR		Faulty controller.	Replace the controller.
142	142-CHARGING		Charger is connected.	Disconnect charger. Check wiring.
143	143-DRV L.-POT		KC option.	
144	144-CTRL ERR		Faulty controller.	Replace the controller.
145	145-TILT ERR		Faulty controller.	Replace the controller.
146	146-OVERLOAD HYD		Platform is overloaded.	Check the platform load and loadc ell calibration.
147	147-SERV MODE		Controller is not calibrated.	Perform load cell calibration.
151	151-KSW ERR		Platform and base modes are ON/OFF at same time.	Check the wiring of the base/platform swtich.
152	152-ENABLE ERR		Enable button is pushed with no command for drive/lift within 10 seconds.	Release the enable button.
153	153-M2 ERR		May be caused by driving on uneven surface.	Cycle the power. Check the driving surface is even and smooth. Check motor wiring for speed sensor wires. Cycle the power again and drive it on a flat surface. Swap the motor.
154	154-M2 ERR		Alarm on Master is Right Side Motor and on Slave is Left Side Motor.	Cycle the power. Check the driving surface is even and smooth. Check motor wiring for speed sensor wires. Cycle the power again and drive it on a flat surface. Swap the motor.
155	155-M2 ERR		Alarm on Master is Right Side Motor and on Slave is Left Side Motor.	Cycle the power. Check the driving surface is even and smooth. Check motor wiring for speed sensor wires. Cycle the power again and drive it on a flat surface. Swap the motor.
156	156-S10 ERR	S10 ERR 01	01 switching to base mode with base lift input active.	Repeat the command sequence. Check the wiring.
		S10 ERR 02	02 switching to base mode with base lower input active.	
		S10 ERR 04	04 switching to base mode with Emergency Lowering Active input active.	
		S10 ERR 08	08 switching to base mode with Brake Release input active.	
		S10 ERR 81	81 switching to platform mode with joystick out of neutral.	
		S10 ERR 82	82 switching to platform mode with steer left input active.	
		S10 ERR 84	84 switching to platform mode with steer right input active.	

5.8-14 Skycoded A error codes

Code	Code String	SubCode	Cause	Troubleshooting
156	156-S10 ERR	S10 ERR 88	88 switching to platform mode with Platform Power Deck Extend input active.	Repeat the command sequence. Check the wiring.
		S10 ERR 90	90 switching to platform mode with Platform Power Deck Retract input active.	
156	156-S10 ERR	S10 ERR A0	A0 switching to platform mode with Emergency Lowering Active input active.	Repeat the command sequence. Check the wiring.
		S10 ERR C0	C0 switching to platform mode with Brake Release input active.	
157	157-M2 ERR		A mismatch occurred in the sampling of a subset of inputs between the two microcontrollers. The hexadecimal value “XX” facilitates Zapi technicians debugging the problem.	Ask the assistance of a Zapi technician.
158	158-DRIVE+LIFT		Drive/lift mode command received at the same time. If SGLE is installed, this error appears when trying to lift or drive without holding in the SGLE button on the side of the control box.	Verify the joystick module is not internally damaged. Check wiring from the drive enable and lift enable switches in the joystick module. If SGLE is installed, press the SGLE button to clear the error.
160	160-TILTED		Machine is tilted.	Check the surface. Check tilt sensor installation/calibration.
161	161-CAN KO		The display does not detect CANbus activity from the controller. It might appear briefly when the upper E-Stop is pushed in.	Check the CAN wiring from the controller to the display.
163	163-M2 ERR		Alarm related to the motor control algorithm.	Ask the assistance of a Zapi technician.
169	169-M2 ERR		This alarm occurs only when the controller is configured as PMSM and the feedback sensor selected is the encoder. The A and B pulse sequence is not correct. The hexadecimal value “XX” facilitates Zapi technicians debugging the problem.	Check the wirings. If the motor direction is correct, swap A and B signals. If the motor direction is not correct, swap two of the motor cables. If the problem is not solved, contact a Zapi technician.
170	170-CTRL ERR		Battery voltage too low/high.	Check battery voltage.
175	175-M2 ERR		Could be an issue with the speed sensor positioning/mounting.	Check both the electric and the mechanical functionality of the sensor. Check the wires crimping. Check the mechanical installation of the sensor; the issue may be it slips inside its housing. If the problem is still present after replacing the sensor, the failure is most likely in the controller, replace it.
177	177-BRK1 ERR		Brake coil on motor is shorted. Brake relay is shorted. Main Harness is shorted at A28 or A30 to 08C.	Check the brake coil for short. Check for brake relay for short. Check the harness for short. Replace/repair the shorted component.

5.8-14 Skycoded A error codes

Code	Code String	SubCode	Cause	Troubleshooting
178	178-M2 TEMP		Motor Temperature is too high over 170 °C/338 °F.	Check MOTOR TEMPERATURE in TESTER. If hot, allow it to cool down. If tempereature reading is incorrect then replace the motor.
180	180-M2 ERR		The motor current is over designed current.	Cycle the power. Manually release the brake. The motor should spin freely. If not, check the brake. If it is released, replace the motor. If the brake is not released, replace the brake.
181	181-M2 ERR		Speed sensor signals are reversed/ faulty.	Check speed sensor functions. Replace if needed.
182	182-M2 ERR		This alarm is related to the traction motor(s) encoder.	Possible swapped phases of encoder sensor(s).
186	186-M2 ERR		Current leakage in DC Motor.	Check for DC motor leakage. Refer to *5.4-2 Test the DC motor.* Replace the DC motor, if needed.
187	187-CTRL ERR		Lift and Lower active at same time.	Check the joystick CAN connections. Check lower control box lift/lower swtich.
188	188-CTRL ERR		Faulty controller.	Replace the controller.
189	189-SEQUENCE		Function active without enable switch.	Repeat the command sequence with enable switch. Replace joystick if issue persists.
190	190-CTRL ERR		Voltage fluctuation during start up at P-Pump motor or controller.	Check all connections at pump motor. Check pump motor leakage. Refer to *5.4-2 Test the DC motor.* Replace the controller if no problems are found.
191	191-A1 ERR		KC option.	
192	192-A1 ERR		KC option.	
193	193-CTRL ERR		Faulty controller.	Replace the controller.
194	194-CTRL ERR		Faulty controller.	Replace the controller.
195	195-BRK1 ERR		Controller detecting a short on A29 on start up. With the code in master, the short is at lowering coil. With code in slave, the short is on brake relay.	Check coil for short and check harness to lowering coil for short. Check brake relay for short.
196	196-M1 ERR		Short between wheel motor phase connections (U,V,W) or internal wheel motor.	Check for short on wheelmotor phases connections (U, V, W) at motor side/ controller side. If short, replace wheel motor.
197	197-CTRL ERR		Mismatch between main and secondary software.	Check the software versions between main and secondary software. Flash it to latest version. If error still persists replace the controller.

5.8-14 Skycoded A error codes

Code	Code String	SubCode	Cause	Troubleshooting
198	198-CTRL ERR		Mismatch between main and secondary paramters.	Confirm paramters and save properly. Adjust paramters as required.
199	199-CTRL ERR		Master microcontroller is transferring parameters to the supervisor.	Wait until the end of the procedure. If the alarm remains longer, cycle the power.
200	200-CTRL ERR		Battery is out of range (too high).	Check the battery voltage.If it is out of range replace the battery.
201	201-M1 ERR		There is an error in the choice of the torque profile parameters.	Checkthe values of those parameters under HARDWARE SETTINGS and SLV HARDWARE SETTINGS lists.
202	202-CTRL ERR		Battery is out of range (over 35V).	Check the battery voltage. If it is out of range replace the battery. If no problem can be found, replace the controller.
206	206-CTRL ERR	CTRL ERR 81	Battery positive is short to motor phase U.	Check power cable connections for short. Check motor leakage test. If the motor connections are OK and no internal shorts found, then the problem is within the controller. Replace it.
		CTRL ERR 82	Battery positive is short to motor phase V.	
		CTRL ERR 83	Battery positive is short to motor phase W.	
207	207-CTRL ERR	CTRL ERR 01	Battery negative is short to motor phase U.	Check power cable connections for short. Check motor leakage test. If the motor connections are OK and no internal shorts found, then the problem is within the controller. Replace it.
		CTRL ERR 02	Battery negative is short to motor phase V.	
		CTRL ERR 03	Battery negative is short to motor phase W.	
208	208-CTRL ERR		Parameter setting is out of range.	Clear EEPROM. Flash the software. Replace the controller. if error still persists.
209	209-CTRL ERR		The controller has restored the default settings. If a CLEAR EEPROM has been made before the last key re-cycle, this warning informs you that EEPROM was correctly cleared.	If the alarm appears at key-on without any CLEAR EEPROM performed, replace the controller.
210	210-CTRL ERR		Something wrong with machine memory.	Try to switch the key off and then on again.If the alarm is still present replace the controller.
211	211-M2 ERR		Traction motor is stuck or incorrect speed sensor signal.	Try to manually release the brake to see if motor rotates. Check speed sensor condition. Check motor wiring. Through the TESTER function, check if the sign of FREQUENCY and ENCODER are the same and if they are different from zero during a traction request.
212	212-M2 ERR		Faulty controller.	check battery voltage. If no problem found, replace the controller.
213	213-C1 ERR		voltage is low at A27 or at wire 19 at contactor.	Check contactor voltage when turned ON. Check wire 19 on contactor.

5.8-14 Skycoded A error codes

Code	Code String	SubCode	Cause	Troubleshooting
214	214-EVP COIL OPN	Master	Open circuit between controller to lowering solenoid.	Check lower solenoid, not connected or open circuit. Replace with different lower coil if not working.Check the harness continuity between A26 and A29 to lowering solenoid connector. If continuity is good, replace the controller.
214	214-EVP COIL OPN	Slave	Open circuit between controller to brake relay.	Check continuity for open circuit between pin B22 of controller and pin 12 of X4 connection in harness. Check connectivity at relay within the lower control box.
215	215-EVP DRV SHRT	Master	Short between controller to lowering solenoid. Short in lowering coil.	Check lower solenoid, not connected or short. Replace with different lower coil, if not working.Check the harness continuity between A26 and A29 to lowering solenoid connector.I f continuity is good, replace the controller.
		Slave	Short between controller to brake relay. Short in brake relay.	Check continuity for short between pin B22 of controller and pin 12 of X4 connection in harness. Check short at relay within the lower control box.
216	216-BRK1 ERR	Master	Open circuit between controller A28 to 2 Pin Connector (Wire 30R) on right motor brake.	Check contunuity between controller A28 and 2 pin brake connector (Wire 30R). If no continuity, replace the harness. If continuity is good, try to manually release brake. If brake does not release, replace brake.
216	216-BRK1 ERR	Slave	Open circuit between controller A30 to 2 Pin Connector (wire 30L) on left motor brake.	Check contunuity between controller A30 and 2 pin brake connector (wire 30L). If no continuity, replace the harness. If continuity is good, try to manually release brake. If brake does not release, replace brake
217	217-CB2 PWR		Low Voltage/ No Voltage at Pin A13 at controller.	Check CB2 circuit breaker. Replace/ Reset breaker if bad. If good, check from CB2 circuit breaker to X3-5 connector and from X3-5 to Pin A13 (wire 03C) at controller.
218	218-M1 TEMP	Master	Temperature sensor is not connected on right motor.	Check for open circuit at motor 6 pin connector on right motor. Check continuity A32 and A21 at controller.If connection is good, replace the motor.
		Slave	Temperature sensor is not connected on left motor.	Check for open circuit at motor 6 pin connector on left motor. Check continuity A33 and A15 at controller. If connection is good, replace the motor.

5.8-14 Skycoded A error codes

Code	Code String	SubCode	Cause	Troubleshooting
219	219-2H-13 ERR		Low Voltage/ No Voltage at Pin A13 at controller.	Check CB2 circuit breaker. Replace/ reset breaker if bad. If good, check from CB2 circuit breaker to X3-5 connector and from X3-5 to Pin A13 (wire 03C) at controller.
220	220-08C LOW		Voltage from the key-on is very low.	Check battery connections and voltage. If battery voltage is ok, then replace the controller.
223	223-C1 ERR		Contactor is shorted.	Check contactor function. Check the harness to the contactor. If contactor not working, replace the contactor.
224	224-CHK SLAVE		Error on Slave side.	Check error on Slave side.
226	226-JSTK ERR		CAN message is out of range.	Replace the joystick.
227	227-CTRL ERR		Faulty controller.	Replace the controller.
229	229-CTRL ERR		Faulty controller.	Replace the controller.
230	230-C1 ERR		Contactor circuit is open.	Check contactor connection and function. Check the harness to the contactor. If contactor not working, replace the contactor.
231	231-CTRL ERR		Internal controller error.	Replace the controller.
232	232-CTRL ERR		Internal controller error.	Replace the controller.
233	233-CTRL ERR		Internal controller error.	Replace the controller.
234	234-CTRL ERR	M 8	Right steering solenoid short A24.	Check connection on right steering solenoid for short. Check condition of harness.
		M 10	Left steering solenoid short A1.	Check connection on left steering solenoid for short. Check condition of harness.
		M 4	Lift solenoid short A25.	Check connection on lift solenoid for short. Check condition of harness.
		S10	Base E-Stop light	Check connection on base e-stop LED. Check condition of harness.
		M 20	Beeper harnesss hort A2.	Check connection on beeper harness for short in lower control box. Check condition of harness.
		S 40	Horn connection short B21.	Check connection on horn for short in lower control box. Check condition of harness.
		S 20	Flashing light connection short B20.	Check connection on flashing light for short. Check condition of harness.
235	235-CTRL ERR		Faulty controller.	Replace the controller.

5.8-14 Skycoded A error codes

Code	Code String	SubCode	Cause	Troubleshooting
236	236-CTRL ERR		Faulty controller.	Replace the controller.
238	238-CTRL ERR		Faulty controller.	Replace the controller.
239	239-CTRL ERR		Hardware and software mismatch.	Check hardware and software version. If good, replace the controller.
240	240-CTRL ERR		The controller cannot operate an output due to a damaged component or controller.	Check the following circuits for open, short, or damaged components: lift, lower, steer, base e-stop light, flashing light, horn and brake relay.
241	241-COIL ERR		Short circuit with 234CTRL ERR. Refer 234 CTRL ERR Subcodes.	Check for short circuit (234 CTRL error) If good, replace the controller.
242	242-COIL ERR		Open circuit with 234 CTRL ERR. Refer 234 CTRL ERR Subcodes.	Check for open circuit (234 CTRL error) If good, replace the controller.
244	244-CHK SLAVE		Warning to check slave node for Errors.	Check Slave Node for Errors.
245	245-CTRL ERR		Incorrect Motor installed.	Confirm motor part number.
246	246-CTRL ERR		Faulty controller.	Replace the controller.
248	248-CAN ERR	CAN ERR 03	Faulty joystick.	Replace the joystick.
		CAN ERR 04	Faulty joystick.	Replace the joystick.
		CAN ERR 20	Faulty joystick.	Replace the joystick.
		CAN ERR 21	Faulty joystick.	Replace the joystick.
		CAN ERR 22	Open CAN connection between joystick and base control box.	Check CAN connections from joystick to base control box.
		CAN ERR 23	Faulty joystick.	Replace the joystick.
		CAN ERR 24	Faulty joystick.	Replace the joystick.
249	249-CTRL ERR		Faulty controller.	Replace the controller.
250	250-M2 TEMP		Faulty controller (internal controller temperature sensor error).	Replace the controller.
251	251-CTRL ERR		Faulty controller (internal voltmeter is out of ranger).	Replace the controller.
253	253-CTRL ERR		Short on phases U/V/W while driving.	Check connections at U/V/W. If good, replace the controller. If not resolved, replace motor.
254	254-CTRL ERR		Short on brake A28 or A30.	Check harness for short to ground. If good, replace the controller.

5.8-15 Skycoded A tester menu - master uC

Skycoded A

The Tester function gives real-time feedback about the state of the controller, the motors and command devices. To access this function, use the Access Flow Chart.

Name	Unit Of Measure	Description
KEY VOLTAGE	Volt (0.1V)	Key voltage pin A3 value measured in real time.
BATTERYVOLTAGE	Volt (0.1V)	Voltage from 03B contactor to B+ controller.
DC BUS CURRENT	Ampere (1 A)	Estimation of the battery current based on the working point.
BATTERY CHARGE	Percentage (1%)	Estimation of the battery charge based on the battery voltage.
BAT.CHARGE D-Q	Percentage (1%)	Estimation of the battery charge based on the data coming from the Delta-Q Charger. It is updated only at the startup. 0 if the charger is not present.
MOTOR VOLTAGE	Percentage (1%)	Estimated motor voltage %.
INDEX OVERMOD	Percentage (1%)	Correction applied to the motor voltage set-point in order to compensate for the actual battery voltage.
FREQUENCY	Hertz (0.1 Hz)	Targeted driving speed command in Hz.
MEASURED SPEED	Hertz (0.1 Hz)	Motor speed measured through the encoder and expressed in the same unit of frequency (Hz). Right motor.
MEASURED SPD SLV	Hertz (0.1 Hz)	Motor speed measured through the encoder and expressed in the same unit of frequency (Hz). Left motor.
SLIP	Hertz (0.1 Hz)	Motor slip, i.e. the difference between the current frequency and the motor speed (in Hz).
CURRENT RMS	Ampere (1 A)	DC current occurrence on the right motor.
CURRENT RMS SLV	Ampere (1 A)	DC current occurrence on the left motor.
IMAX LIM TRA	Ampere (1 A)	Instantaneous values of the maximum current the inverter can apply to the motor to satisfy respectively a traction or braking request. The value is evaluated basing on the realtime conditions (inverter temperature, motor temperature, etc.).
IMAX LIM BRK	Ampere (1 A)	Instantaneous values of the maximum current the inverter can apply to the motor to satisfy respectively a traction or braking request. The value is evaluated basing on the realtime conditions (inverter temperature, motor temperature, etc.).
ID FILTERED RMS	Ampere (1 A)	Projections of the current vector respectively on the d- or q-axis, expressed in root-mean-square Ampere.
IQ FILTERED RMS	Ampere (1 A)	Projections of the current vector respectively on the d- or q-axis, expressed in root-mean-square Ampere.
IQIMAX LIM TRA	Ampere (1 A)	Master motor: instantaneous value of the maximum current the inverter can apply to the motor to satisfy a traction request. The value is evaluated basing on the real-time conditions (inverter temperature, motor temperature, etc.).

5.8-15 Skycoded A tester menu - master uC

Name	Unit Of Measure	Description
IQIMAX LIM BRK	Ampere (1 A)	Master motor: instantaneous value of the maximum current the inverter can apply to the motor to satisfy a braking request. The value is evaluated basing on the real-time conditions (inverter temperature, motor temperature, etc.).
MOT POWER WATT	Watt (1 W)	Estimation of the power supplied to the motor.
STATOR FLUXMWB	10-3 Weber (0.1 mWb)	Master motor: estimation of the motor magnetic flux.
MOTION TORQUE NM	Nm (0.1 Nm)	Master motor: estimation of the motor torque.
STEER ANGLE	Degrees (1°)	Current steering wheel angle. When the steering is straight ahead STEER ANGLE is zero.
TEMPERATURE1	Celsius (1 °C)	Internal temperature of controller. This temperature is used for the HIGH TEMPERATURE alarm.
TEMPERATURE2	Celsius (1 °C)	Temperature measured on the slave-side power board. This temperature is used for the HIGH TEMPERATURE alarm.
M65-M2 TEMP	Celsius (1 °C)	Master motor temperature: windings temperature. This temperature is used for the MOTOR OVERTEMP alarm.
A7 EMRCY PLT	OFF/ON	Status of the input A7.
B2LIFTB	OFF/ON	Status of the base mode lift input.
B6LOWER B	OFF/ON	Status of the base mode lower input.
B7B MODE	OFF/ON	Status of the base mode active input.
B12 P MODE	OFF/ON	Status of the platform mode active input.
B8 DIAGNOST	OFF/ON	Status of the diagnostic active input.
B3ELEVATED	OFF/ON	Status of the mast position limit switch.
B11 BRK REL	OFF/ON	Status of the emergency brake release switch.
B4 TILTED	OFF/ON	Status of the external tilt switch. Off=level, ON=out of level.
A8CHARGER	OFF/ON	Status of the battery charger. When ON function is disabled.
A23 TELEMAT	OFF/ON	Status of the telematics input
A27MAIN CONT	Percentage (1%)	0V reference from the main contactor output A27.
A28 ELBRAKE MST	Percentage (1%)	0V reference from the master-side brake output A28.
A30 ELBRAKE SLV	Percentage (1%)	0V reference from the slave-side brake output A30.
A26SETEVP	Percentage (1%)	Positive reference to the lowering coil output A26.
A25 EV1	OFF/ON	Positive reference to the lift coil output A25.
A24 EV2	OFF/ON	0V reference from steer right solenoid output A24.
A1EV3	OFF/ON	0V reference from steer left solenoid output A1.
A2EV4	OFF/ON	0V reference fromall motion alarm output A2.
JOYD 1:DRIVE M	OFF/ON	Status of the digital input at the platform joystick for drive mode.

5.8-15 Skycoded A tester menu - master uC

Name	Unit Of Measure	Description
JOYD 2:LIFT M	OFF/ON	Status of the digital input at the platform joystick for lift mode.
JOYD 3:HORN	OFF/ON	Status of the digital input at the platform joystick for horn.
JOYD 4:DECK LIM	OFF/ON	Status of the digital input at the platform joystick for deck extend limit switch.
JOYD 5:SERVICE	OFF/ON	Status of the digital input at the platform joystick for service limit switch.
JOYD 6:FOOT KC	OFF/ON	Status of the digital input at the platform joystick for the limit switch (KC option only).
JOYD 7:PLATFORM	OFF/ON	Status of the digital Input for platform mode.
JOYD 8:KC SWNO	OFF/ON	Status of the digital input at the platform joystick for the KC N/O (KC option only).
JOYD 9:KC SWNC	OFF/ON	Status of the digital input at the platform joystick for the KC N/C (KC option only).
JOYD10:INDOOR	OFF/ON	Status of the digital input at the platform joystick for the indoor mode active.
JOYD13:ENABLE	OFF/ON	Status of the digital input at the platform joystick for the joystick enable switch.
JOYD14:STEER L	OFF/ON	Status of the digital input at the platform joystick for the joystick steer left switch.
JOYD15:STEER R	OFF/ON	Status of the digital input at the platform joystick for the joystick steer right switch.
JOYSTICK: FAULT	OFF/ON	Joystick in fault state.
JOYA 1: Y AXIS	ANALOGUE	Signal from Y axis of joystick (from 0V to 5V).
JOYO 1: LED 1	OFF/ON	Status of the LED output for power ON .
JOYO 2: LED 2	OFF/ON	Status of the LED output for drive mode.
JOYO 3: LED 3	OFF/ON	Status of the LED Output for lift mode.
LOAD C. WEIGHT 1	WEIGHT (Kg)	Weight measured at the load cell 1 (kg).
LOAD C. WEIGHT 2	WEIGHT (Kg)	Weight measured at the load cell 2 (kg).
LOAD C. WEIGHT 3	WEIGHT (Kg)	Weight measured at the load cell 3 (kg).
LOAD C. ERROR	OFF/ON	Load cell error.
LOAD C. MOTION	OFF/ON	Load cell is estimating the weight/unsteady load.
LOAD C. W.10KG	OFF/ON	Load cell is seeing at least 10kg.
LOAD C. OVER W.	OFF/ON	Load cell is seeing overload.
LOAD C.UNDER W.	OFF/ON	Load cell is seeing negative load.
LOAD C.R WEIGHT1	WEIGHT (Kg)	Weight measured at the redundant load cell 1 (kg).
LOAD C.R WEIGHT2	WEIGHT (Kg)	Weight measured at the redundant load cell 2 (kg).

5.8-15 Skycoded A tester menu - master uC

Name	Unit Of Measure	Description
LOAD C.R WEIGHT3	WEIGHT (Kg)	Weight measured at the redundant load cell 3 (kg).
LOAD C.R ERROR	OFF/ON	Redundant load cell error.
LOAD C.R MOTION	OFF/ON	Redundant loadcell is estimating the weight/unsteady load.
LOAD C.R W.10KG	OFF/ON	Redundant load cell signal is seeing atleast 10kg.
LOAD C.R OVER W.	OFF/ON	Redundant loadcell signal is seeing overload.
LOAD C.R UNDER W	OFF/ON	Redundant loadcell signal is seeing negative load.
CTRAP HW	Number (1)	Master motor: number of occurrences of hardware-detected overcurrent events.
TRUCK SPEEDkm/h	km/h (0.1 km/h)	Speed of the truck (it requires custom software embedding gear ratio and wheels radius). Expressed in KPH.
TRUCK SPEEDmp/h	mp/h (0.1 km/h)	Speed of the truck (it requires custom software embedding gear ratio and wheels radius). Expressed in MPH.
ODOMETERKM	km (1 km)	Odometer: overall distance traveled by the truck.
LS ELEVATED	Number (1)	Platform in elevated state.
LS LOAD CELL K	kg (1 kg)	Load estimation from the load cell in kilogram.
LS LOAD CELL L	Pound (1 lb)	Load estimation from the load cell in pound.
TRUCK MODEL	Number (1)	Displays the model that the controller is set to: 4:SJ12 5:SJ16 6:SJ20.
TILT PITCH	Degrees (0.01°)	Reading of the internal tilt sensor in degrees from front to back.
TILT ROLL	Degrees (0.01°)	Reading of the internal tilt sensor in degrees from side to side.
TILT STATUS		
TILT TEMPERATURE		
OPERATION MODE	Number (1)	Operative mode. 0 = Emergency 1 = On 2 = Platform mode 3 = Base mode.
ALARM BEEPER	Number (1)	Alarm condition for beeper.
ALARM FLASHER	Number (1)	Alarm condition for flashing light.
SPEED M. ACTIVE	Number (1)	Speed mode active.
SERVICE POSITION	Number (1)	Service position limit switch is active.
DIAGNOSTIC	Number (1)	Service mode active with diagnostic switch input B8 active.
DECK EXTENSION L	Number (1)	Deck extension limit switch is active.
ANTI OVER RISNO	Number (1)	Status of the normally open anti over rise input (KC Option only).
ANTI OVER RISNC	Number (1)	Status of the normally closed anti over rise input (KC Option only).
ANTI OVER RISING	Number (1)	Status of the anti over rise function (KC Option only).
TELEMATICS DIS	Number (1)	Status of the telematics disable function.

5.8-15 Skycoded A tester menu - master uC

Name	Unit Of Measure	Description
RAMP CUTBACK	Number (1)	Status of the speed cutback function.
MAX SPEED TRACT	Hertz (0.1 Hz)	Maximum ground speed given the present tilt of the machine.
OUTDOOR MODE	OFF/ON	Status of the outdoor mode function: OFF = indoor; ON = outdoor.
OVER HEIGHT	Number (1)	Status of the outdoor option: 0 = within the limit of outdoor height; 1 = over the limit of outdoor height; 2 = at maximum outdoor height.
PULSE DOWN STATE	Number (1)	Status of the pulse down function.

5.8-16 Skycoded A tester menu - slave uC

Skycoded A

Name	Unit Of Measure	Description
KEY VOLTAGE	Volt (0.1V)	Key voltage pin A3 value measured in real time.
BATTERY VOLTAGE	Volt (0.1V)	Voltage from 03B contactor to B+ controller.
DC BUS CURRENT	Ampere (1 A)	Estimation of the battery current based on the working point.
BATTERY CHARGE	Percentage (1%)	Estimation of the battery charge based on the battery voltage.
BAT.CHARGE D-Q	Percentage (1%)	Estimation of the battery charge based on the data coming from the Delta-Q Charger. It is updated only at the startup. 0 if the charger is not present.
MOTOR VOLTAGE	Percentage (1%)	Estimated motor voltage %.
INDEX OVERMOD	Percentage (1%)	Correction applied to the motor voltage set-point in order to compensate for the actual battery voltage.
FREQUENCY	Hertz (0.1 Hz)	Targeted driving speed command in Hz.
MEASURED SPEED	Hertz (0.1 Hz)	Motor speed measured through the encoder and expressed in the same unit of frequency (Hz). Right motor.
MEASURED SPD SLV	Hertz (0.1 Hz)	Motor speed measured through the encoder and expressed in the same unit of frequency (Hz). Left motor.
SLIP	Hertz (0.1 Hz)	Motor slip, i.e. the difference between the current frequency and the motor speed (in Hz).
CURRENT RMS	Ampere (1 A)	DC current occurrence on the right motor.
CURRENT RMS SLV	Ampere (1 A)	DC current occurrence on the left motor.
IMAX LIM TRA	Ampere (1 A)	Instantaneous values of the maximum current the inverter can apply to the motor to satisfy respectively a traction or braking request. The value is evaluated basing on the realtime conditions (inverter temperature, motor temperature, etc.).
IMAX LIM BRK	Ampere (1 A)	Instantaneous values of the maximum current the inverter can apply to the motor to satisfy respectively a traction or braking request. The value is evaluated basing on the realtime conditions (inverter temperature, motor temperature, etc.).
ID FILTERED RMS	Ampere (1 A)	Projections of the current vector respectively on the d- or q-axis, expressed in root-mean-square Ampere.
IQ FILTERED RMS	Ampere (1 A)	Projections of the current vector respectively on the d- or q-axis, expressed in root-mean-square Ampere.
IQIMAX LIM TRA	Ampere (1 A)	Master motor: instantaneous value of the maximum current the inverter can apply to the motor to satisfy a traction request. The value is evaluated basing on the real-time conditions (inverter temperature, motor temperature, etc.).
IQIMAX LIM BRK	Ampere (1 A)	Master motor: instantaneous value of the maximum current the inverter can apply to the motor to satisfy a braking request. The value is evaluated basing on the real-time conditions (inverter temperature, motor temperature, etc.).

5.8-17 Skycoded A tester menu - slave uC

Name	Unit Of Measure	Description
MOT POWER WATT	Watt (1 W)	Estimation of the power supplied to the motor.
STATOR FLUX MWB	10-3 Weber (0.1 mWb)	Master motor: estimation of the motor magnetic flux.
MOTION TORQUE NM	Nm (0.1 Nm)	Master motor: estimation of the motor torque.
STEER ANGLE	Degrees (1°)	Current steering wheel angle. When the steering is straight ahead STEER ANGLE is zero.
TEMPERATURE1	Celsius (1 °C)	Internal temperature of controller This temperature is used for the HIGH TEMPERATURE alarm.
M65-M2 TEMP	Celsius (1 °C)	Slave Motor Temperature: windings temperature. This temperature is used for the MOTOR OVERTEMP alarm.
DC PUMP CURRENT	Ampere (1 A)	DC current of the pump motor.
DC PUMP VMN	Percentage (1%)	Percentage of voltage applied to the pump motor.
B2LIFT B	OFF/ON	Status of the base mode lift input.
B6 LOWER B	OFF/ON	Status of the base mode lower input.
B7 B MODE	OFF/ON	Status of the base mode active input.
B12 P MODE	OFF/ON	Status of the platform mode active input.
B8 DIAGNOST	OFF/ON	Status of the diagnostic active input.
B3 ELEVATED	OFF/ON	Status of the mast position limit switch.
B11 BRK REL	OFF/ON	Status of the emergency brake release switch.
B4 TILTED	OFF/ON	Status of the external tilt switch. Off=level, ON=out of level.
A8CHARGER	OFF/ON	Status of the battery charger. When ON function is disabled.
A23 TELEMAT	OFF/ON	Status of the Telematics Input
B22 SET EVP2	Percentage (1%)	Percentage of power applied to the brake relay (B22).
B16 EV5	OFF/ON	Spare.
B17 EV6	OFF/ON	Spare.
B18 EV7	OFF/ON	Status of the B18 (Power LED) Base E-Stop.
B20 EV8	OFF/ON	Status of the B20 Flashing Lights.
B21 EV9	OFF/ON	Status of the B21 Horn.
JOYD 1:DRIVE M	OFF/ON	Status of the digital input at the platform joystick for drive mode.
JOYD 2:LIFT M	OFF/ON	Status of the digital input at the platform joystick for lift mode.
JOYD 3:HORN	OFF/ON	Status of the digital input at the platform joystick for horn.
JOYD 4:DECK LIM	OFF/ON	Status of the digital input at the platform joystick for deck extend limit switch.
JOYD 5:SERVICE	OFF/ON	Status of the digital input at the platform joystick for service limit switch.

5.8-18 Skycoded A tester menu - slave uC

Name	Unit Of Measure	Description
JOYD 6:FOOT KC	OFF/ON	Status of the digital input at the platform joystick for the limit switch (KC option only).
JOYD 7:PLATFORM	OFF/ON	Status of the digital Input for platform mode.
JOYD 8:KC SWNO	OFF/ON	Status of the digital input at the platform joystick for the KC N/O (KC option only).
JOYD 9:KC SWNC	OFF/ON	Status of the digital input at the platform joystick for the KC N/C (KC option only).
JOYD10:INDOOR	OFF/ON	Status of the digital input at the platform joystick for the indoor mode active.
JOYD13:ENABLE	OFF/ON	Status of the digital input at the platform joystick for the joystick enable switch.
JOYD14:STEER L	OFF/ON	Status of the digital input at the platform joystick for the joystick steer left switch.
JOYD15:STEER R	OFF/ON	Status of the digital input at the platform joystick for the joystick steer right switch.
JOYSTICK: FAULT	OFF/ON	Joystick in fault state.
JOYA 1: Y AXIS	ANALOGUE	Signal from Y axis of joystick (from 0V to 5V).
JOYO 1: LED 1	OFF/ON	Status of the LED output for power ON .
JOYO 2: LED 2	OFF/ON	Status of the LED output for drive mode.
JOYO 3: LED 3	OFF/ON	Status of the LED Output for lift mode.
LOAD C. WEIGHT 1	WEIGHT (Kg)	Weight measured at the load cell 1 (kg).
LOAD C. WEIGHT 2	WEIGHT (Kg)	Weight measured at the load cell 2 (kg).
LOAD C. WEIGHT 3	WEIGHT (Kg)	Weight measured at the load cell 3 (kg).
LOAD C. ERROR	OFF/ON	Load cell error.
LOAD C. MOTION	OFF/ON	Load cell is estimating the weight/unsteady load.
LOAD C. W.10Kg	OFF/ON	Load cell is seeing at least 10kg.
LOAD C. OVER W.	OFF/ON	Load cell is seeing overload.
LOAD C.UNDER W.	OFF/ON	Load cell is seeing negative load.
LOAD C.R WEIGHT1	WEIGHT (Kg)	Weight measured at the redundant load cell 1 (kg).
LOAD C.R WEIGHT2	WEIGHT (Kg)	Weight measured at the redundant load cell 2 (kg).
LOAD C.R WEIGHT3	WEIGHT (Kg)	Weight measured at the redundant load cell 3 (kg).
LOAD C.R ERROR	OFF/ON	Redundant load cell error.
LOAD C.R MOTION	OFF/ON	Redundant load cell is estimating the weight/unsteady load.
LOAD C.R W.10Kg	OFF/ON	Redundant load cell signal is seeing at least 10kg.
LOAD C.R OVER W.	OFF/ON	See load cell protocol.

5.8-19 Skycoded A tester menu - slave uC

Name	Unit Of Measure	Description
LOAD C.R UNDER W	OFF/ON	See load cell protocol.
CTRAP HW	Number (1)	Slave motor: number of occurrences of hardware-detected overcurrent events.
CPU TIME F US		Reserved for Zapi internal use.
CPU TIME US		Reserved for Zapi internal use.
TILT PITCH	Degrees (0.01°)	Reading of the internal tilt sensor in degrees from front to back.
TILT ROLL	Degrees (0.01°)	Reading of the internal tilt sensor in degrees from side to side.
TILT STATUS	OFF/ON	Tilt sensor status.
TILT TEMPERATURE	Celsius (0.1 °C)	Temperature of the internal Tilt Sensor.
OUTDOOR MODE	OFF/ON	Status of the outdoor mode function: OFF = indoor; ON = outdoor.
OVER HEIGHT	Number (1)	Status of the outdoor option: 0 = within the limit of outdoor height; 1 = over the limit of outdoor height; 2 = at maximum outdoor height.
PULSE DOWN STATE	Number (1)	Status of the pulse down function.

5.8-20 Set the access level

To set the **ACCESS LEVEL** (**LEVEL 1 CODE - 1275**) for set up and adjustment, do the steps that follow:

1. Make sure the display shows the main page.
2. Press the **MIDDLE** button twice.
3. Press the **UP** or **DOWN** buttons to find the **PASSWORD** menu, then press the **MIDDLE** button to select it.
4. The display shows the initial code ******** with the first ***** underlined.
5. Use the **UP** or **DOWN** buttons to set the first digit of the code.
6. Press the **RIGHT** button to move to the next digit (the second digit becomes underlined).
7. Set the second digit of the code.
8. Repeat steps 5-7 for all the code digits.Make sure you enter the correct code.If a number is wrong, press **LEFT** and **RIGHT** to select it again, and **UP** and **DOWN** to correct it.
9. Press the **MIDDLE** button to confirm the code. The **ACCESS LEVEL** changes when you enter the correct code.
10. If the code you entered is incorrect, the ACCESS LEVEL goes to **ACCESS LEVEL 3**.
11. Cycle power to the machine to restore **ACCESS LEVEL 3** for normal daily operation.

5.8-21 Set the language

1. Make sure the display shows the main page.
2. Change the **ACCESS LEVEL** to level 1 (see *5.8-20 Set the access level).*
3. Press the **UP** or **DOWN** buttons to find the **LANGUAGE** menu, then press the **MIDDLE** button to select it.
4. Press the **UP** or **DOWN** buttons to find the desired language. Press the **MIDDLE** button to select it.
5. The display asks if you are sure. Press the **LEFT** button to say **NO** and exit without the change. Press the **MIDDLE** button to say **YES** and save the change.
6. If you said **YES**, the display shows "**SAVING PARAMETER. WAIT PLEASE**." Do not cycle power to the machine while waiting.
7. Cycle power to the ZAPI display to restore **ACCESS LEVEL 3** for normal daily operation.

5.8-22 Set the machine type

1. Make sure the display shows the main page.
2. Change the **ACCESS LEVEL** to level 1 (see *5.8-20 Set the access level).*
3. Press the **UP** or **DOWN** buttons to find the **MACHINE TYPE** menu**,** then press the **MIDDLE** button to select it.
4. Press the **UP** or **DOWN** buttons to find the desired machine type.Press the **MIDDLE** button to select it.
5. The display asks if you are sure. Press the **LEFT** button to say **NO** and exit without the change. Press the **MIDDLE** button to say **YES** and save the change.
6. If you said **YES**, the display shows "**SAVING PARAMETER. WAIT PLEASE**." Do not cycle power to the machine while waiting.
7. Cycle power to the ZAPI display to restore **ACCESS LEVEL 3** for normal daily operation.

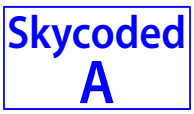

5.8-23 Set the region

1. Make sure the display shows the main page.
2. Change the **ACCESS LEVEL** to level 1 (see *5.8-20 Set the access level).*
3. Press the **UP** or **DOWN** buttons to find the **REGION** menu, then press the **MIDDLE** button to select it.
4. Press the **UP** or **DOWN** buttons to find the desired region.Press the **MIDDLE** button to select it.
5. The display asks if you are sure. Press the **LEFT** button to say **NO** and exit without the change. Press the **MIDDLE** button to say **YES** and save the change.
6. If you said **YES**, the display shows "**SAVING PARAMETER. WAIT PLEASE**." Do not cycle power to the machine while waiting.
7. Cycle power to the ZAPI display to restore **ACCESS LEVEL 3** for normal daily operation.

5.8-24 Set the battery type

1. Make sure the display shows the main page.
2. Change the **ACCESS LEVEL** to level 1 (see *5.8-20 Set the access level).*
3. Press the **UP** or **DOWN** buttons to find the **REGION** menu, then press the **MIDDLE** button to select it.
4. Press the **UP** or **DOWN** buttons to find the desired battery type.Press the **MIDDLE** button to select it.
5. The display asks if you are sure. Press the **LEFT** button to say **NO** and exit without the change. Press the **MIDDLE** button to say **YES** and save the change.
6. If you said **YES**, the display shows "**SAVING PARAMETER. WAIT PLEASE**." Do not cycle power to the machine while waiting.
7. Cycle power to the ZAPI display to restore **ACCESS LEVEL 3** for normal daily operation.

5.8-25 Select the console

1. Make sure the display shows the main page.
2. Change the **ACCESS LEVEL** to level 1 (see *5.8-20 Set the access level).*
3. Press the **UP** or **DOWN** buttons to find the **CONSOLE** menu, then press the **MIDDLE** button to select it.
4. The display shows "CONNECTING TO..."
5. Press the **UP** or **DOWN** buttons to find the module you wish to connect to, then press the **MIDDLE** button to select it.

- **DISP EDZ S3x.xx** - You can modify the display parameters depending on the access level.
- **AXMR2B 2GS3x.xx** - You can modify the inverter parameters depending on the access level.
- **AXSR2B 2GS3x.xx** - You can monitor the alarms. You cannot modify parameters in this menu.

Skycoded A

5.8-26 Tilt sensor calibration

1. Make sure the display shows the main page.
2. Change the **ACCESS LEVEL** to level 1 (see *5.8-20 Set the access level).*
3. Press the **UP** or **DOWN** buttons to find the **CALIBRATION** menu, then press the **MIDDLE** button to select it.
4. Press the **UP** or **DOWN** buttons to find the **CAL. TILT SENSOR.**Press the **MIDDLE** button to select it.
5. The console asks if the machine is on a flat surface. Press the **MIDDLE** button to say **YES**. Press the **LEFT** button to say **NO**.
6. The console shows **CONFIRM TILT C.? R-00.## P-00.##**. Press the **MIDDLE** button to **CONFIRM**.
7. Wait for the machine to go through the calibration process. The console shows **CALIBRATION DONE. R-00.0# P00.0#**.Press and hold the **LEFT** button to go back to the main menu.

IMPORTANT

Wait 1 minute before shutting off the machine after the calibration is done.

8. Cycle power to the ZAPI display to restore **ACCESS LEVEL 3** for normal daily operation.

5.8-27 Nominal weight calibration

NOTE

Use a suitably rated lifting device to put a calibrated load on the platform based on your MEWP's platform capacity. You can find this info on your MEWP's platform capacity label.

1. Make sure the machine type is set up correctly (see *5.8-22 Set the machine type*).
2. Make sure the display shows the main page.
3. Change the **ACCESS LEVEL** to level 1 (see *5.8-20 Set the access level).*
4. Press the **UP** or **DOWN** buttons to find the **CALIBRATION** menu, then press the **MIDDLE** button to select it.
5. To abort the calibration process at any time, press and hold the **LEFT** button and cycle power to the machine.
6. Press the **UP** or **DOWN** buttons to find **CALIBR. LOAD CELL.**Press the **MIDDLE** button to select it.
7. Press the **UP** or **DOWN** buttons to find **CALIBR. LOAD.CELL: NOMINAL WEIGHT**.Press the **MIDDLE** button to select it.
8. Make sure the platform is not touching the counterweights. If they are touching, slightly raise the platform, so they are **ISOLATED**.
9. The display will ask **IS PLATFORM ISOLATED FROM THE BASE?** Press the **RIGHT** button to confirm.
10. Remove and set aside any field option or Accessoryzer installed on the platform.
11. The display asks **IS PLATF EMPTY WITHOUT OPTIONS?** Press the **RIGHT** button to confirm.
12. The display asks **IS RATED WEIGHT PUT ON PL? ###KG**. The **###** value depends on your MEWP's platform capacity. LOAD CAPACITY ONTO THE PLATFORM. Press the **RIGHT** button to confirm.
13. The display shows **CONFIRM LOADED CALIBRATE.? ###KG**. The **###** value shows the sum of the rated load and the platform weight. The range should be between 200 kg to 300 kg. If the display shows an out of range value, there is either an issue with the load cell installation or the load cell is defective. Press the **RIGHT** button to confirm.

Skycoded
A

14. The display will ask **IS WEIGHT LIFTED AND PLATF EMPTY? Remove the load on the platform** and press the **MIDDLE** button to confirm.
15. The display will show **CONFIRM EMPTY CALIBRAT.?###KG**. The **###** value shown is the platform weight only. The range should be between 50 kg to 100 kg. If the display shows an out of range value, there is either an issue with the load cell installation or the load cell is defective. Press the **RIGHT** button to confirm.
16. The display shows **SAVING DATA WAIT**.
17. Do not cycle power to the ZAPI display while the data is being saved.
18. Once the data is saved, the display will show **CALIBRATION DONE**.

IMPORTANT

Wait 1 minute before shutting off the machine after the calibration is done.

19. Cycle power to the ZAPI display to restore **ACCESS LEVEL 3** for normal daily operation.
20. Install any field option or Accessoryzer that may have been removed earlier.

Skycoded A

5.8-28 Partial weight calibration

NOTE

To cancel the calibration process at any time, press and hold the LEFT button and cycle power to the MEWP.

1. Get an object that weighs between 18-45 kg (40-100 lbs) to use as a partial load for this procedure. Make sure you know the exact weight of this object in kilograms.
2. Remove and set aside any field option or Accessoryzer installed on the platform.
3. Power up the MEWP and position it so the platform is raised enough so it does not touch the counterweights.
4. Press the middle button on the Skycoded display twice.
5. Use the **UP** or **DOWN** buttons to go to **PASSWORD**.
6. Enter the password **1275**.
   - Use the **UP** and **DOWN** buttons to select the numbers, and the **RIGHT** button to go to the next digit.
   - Press the **MIDDLE** button to confirm the code.
7. Press the **UP** or **DOWN** buttons to find the **CALIBRATION** menu. Press the **MIDDLE** button to select it.
8. Press the **UP** or **DOWN** buttons to find **CALIBR. LOAD CELL.** Press the **MIDDLE**.
9. Press the **UP** or **DOWN** buttons to find **CALIBR. LOAD.CELL: PARTIAL WEIGHT**. Press the **MIDDLE** button.
10. The display asks **IS PLATFORM ISOLATED FROM THE BASE?** Press the **MIDDLE** button to confirm.
11. The display asks **IS PLATF EMPTY WITHOUT OPTIONS?** Verify the platform is empty, and if so, press the **MIDDLE** button.
12. The display shows **ADJUST PARTIAL WEIGHT ## KG**. Press the **UP** or **DOWN** buttons to enter the weight of the partial load (from step 1).
13. Press the **MIDDLE** button.
14. Use a suitably rated lifting device to load the partial load onto the platform.
15. When it is loaded, press the **MIDDLE** button.

16. The display shows **CONFIRM LOADED CALIBRATE.? ###KG**. The **###** value shows the sum of the partial load and the platform weight. Press the **MIDDLE** button.
17. Remove the partial load from the platform.
18. The display asks **IS WEIGHT LIFTED AND PLATF EMPTY?** Press the **MIDDLE** button.
19. The display shows **CONFIRM EMPTY CALIBRAT.?###KG**. The **###** value shown is the platform weight only. Press the **MIDDLE** button to confirm.
20. The display shows **SAVING DATA WAIT**.
21. Once the data saves, the display shows **CALIBRATION DONE**.

IMPORTANT

Wait 1 minute before you shut off the MEWP after the calibration is complete.

22. Cycle power to the MEWP to restore **ACCESS LEVEL 3** for normal daily operation.
23. Install any field option or Accessoryzer that may have been removed earlier.

5.8-29 Check the platform load

1. Use *5.8-8 Access flowchart menu* to get to the Tester Menu.
2. Select Master uC in the Tester Menu.
3. To see the platform load value in kilograms use the up arrow to scroll through the menu to LS LOAD CELL K.
4. To see the platform load value in pounds use the up arrow to scroll through the menu to LS LOAD CELL L.

5.8-30 Test the load cells

1. Use *5.8-8 Access flowchart menu* to get to the Tester Menu.
2. Select Master uC in the Tester Menu.
3. Use the up arrow to scroll through the menu to LOAD C. WEIGHT 1 (front load cell).Write down the value shown.
4. Scroll up to LOAD C. WEIGHT 2 (right load cell). Write down the value.
5. Scroll up to LOAD C. WEIGHT 3 (left load cell). Write down the value.
6. Take the value of LOAD C. WEIGHT 1 and subtract the value of LOAD C. WEIGHT 2 from it.Take that value and subtract the value of LOAD C. WEIGHT 3.
7. The final value should be the load on the platform measured in kilograms (+/- 5 kg). If the value is different than the load on the platform, check that there is no damage to the load cells or the the wiring.Check that the load cells and wiring are installed and connected correctly.
   - If there is an open circuit, the value of the affected load cell will read +/- 4000 kg.
   - Check the wiring of the affected load cell for damaged or disconnected wires. If no damaged or disconnected wires are found, replace the load cells.

Skycoded
A

5.9 Skycoded display B

5.9-1 Skycoded display B controls



Button	Function
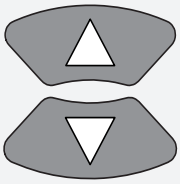	**UP and DOWN buttons** Select or scroll through through menus.
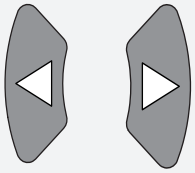	**LEFT and RIGHT buttons** Change settings and move through menus.
	**ENTER button** Select or save.

5.9-2 Main menu overview

MACHINE INFO	View the software versions and the current state of the machine.
TESTER MENU	View the main controller machine parameters.
TESTER SEC	View the secondary controller machine parameters.
PARAMETER	Adjust the machine parameters and set options.
MACHINE SETUP	Set the model, region, battery type, override mode, and access the calibration menu.
LOGGED ALARMS M	View the logbook of alarms for the main controller.
LOGGED ALARMS S	View the logbook of alarms for the secondary controller.
STORE DATA	Save changes.

5.9-3 Main menu and language selection menu

Skycoded B

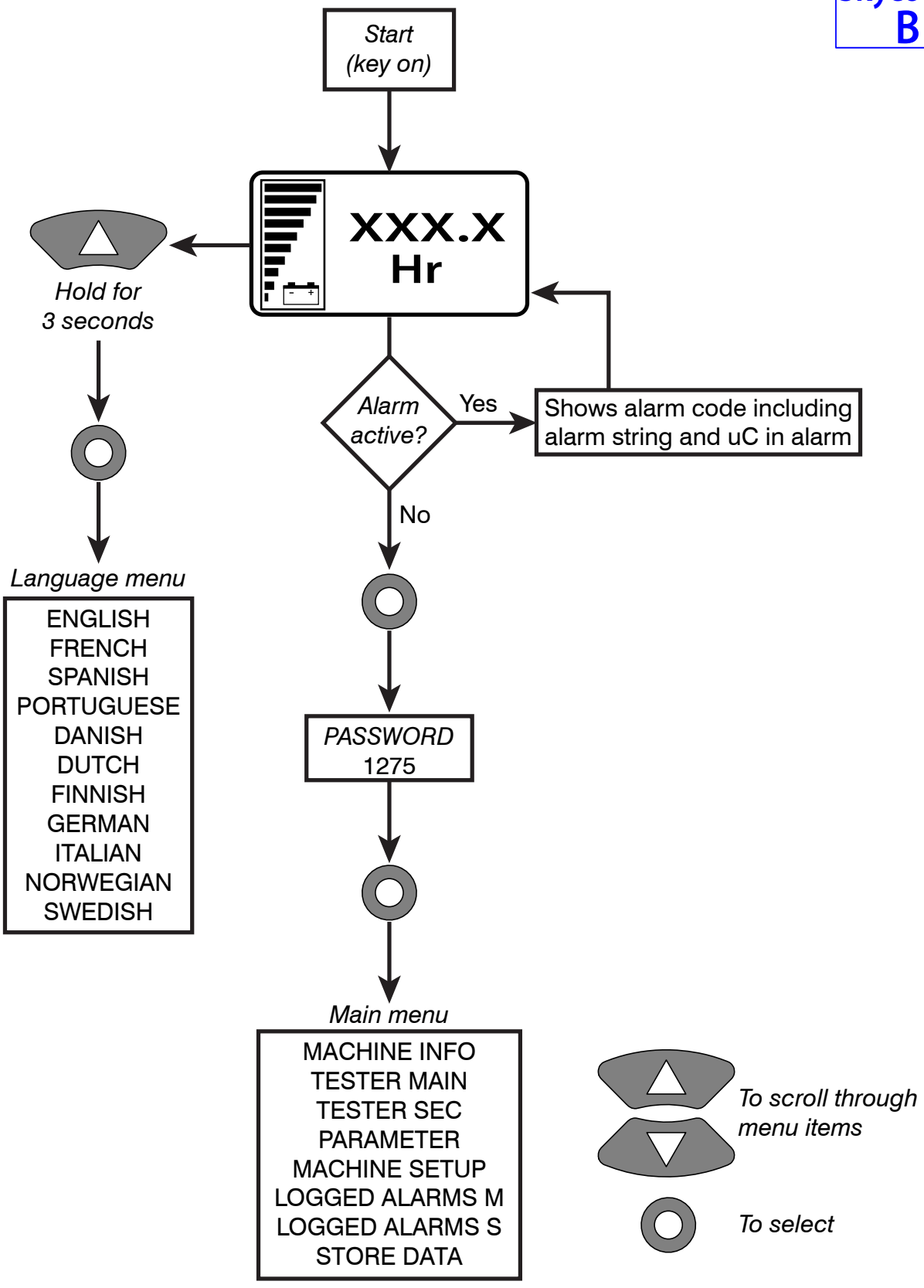

5.9-4 Machine info menu

Skycoded B

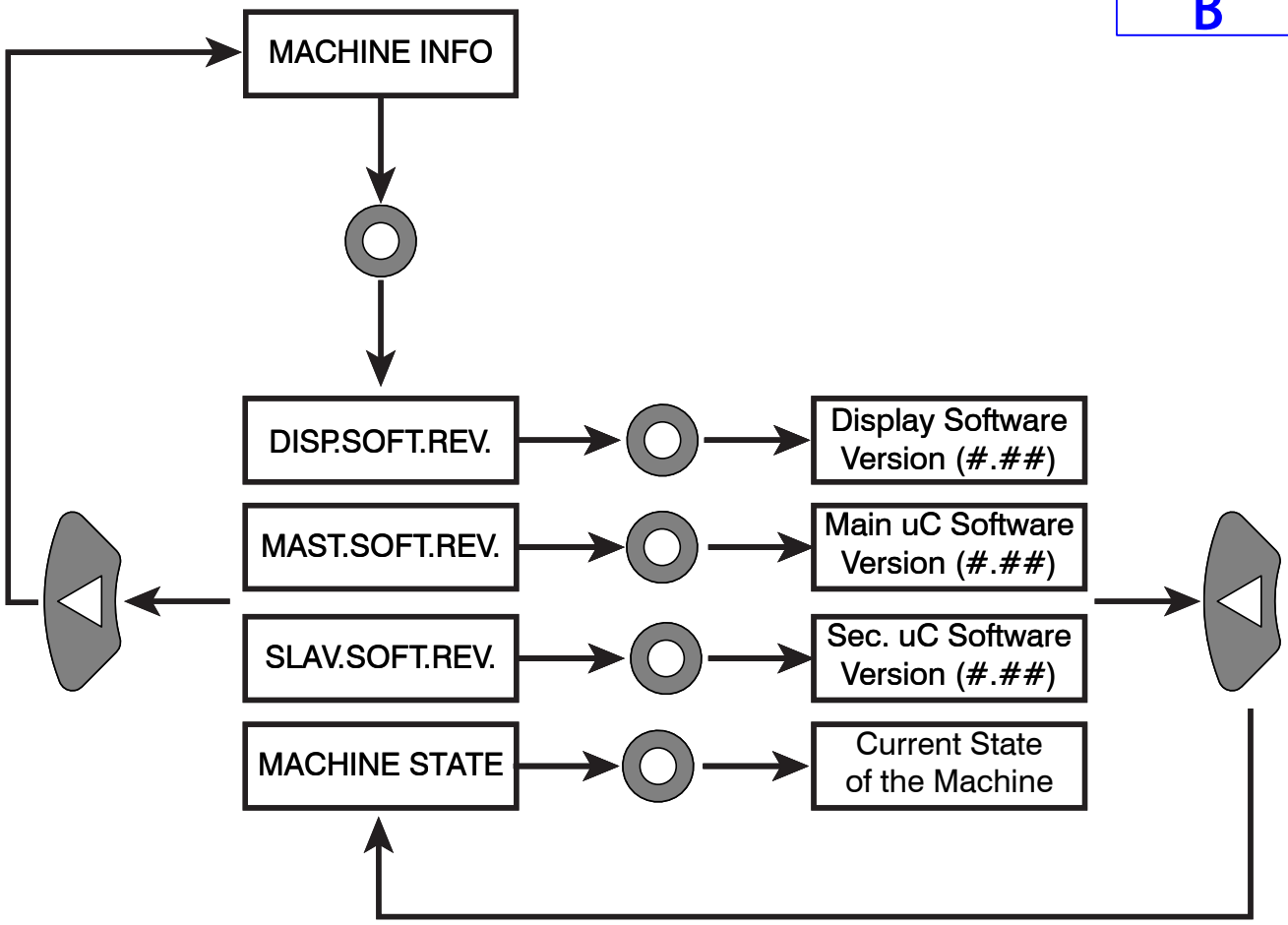

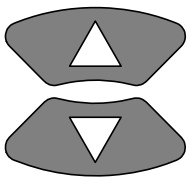

To scroll through menu items



To select

5.9-5 Tester main menu

Skycoded B

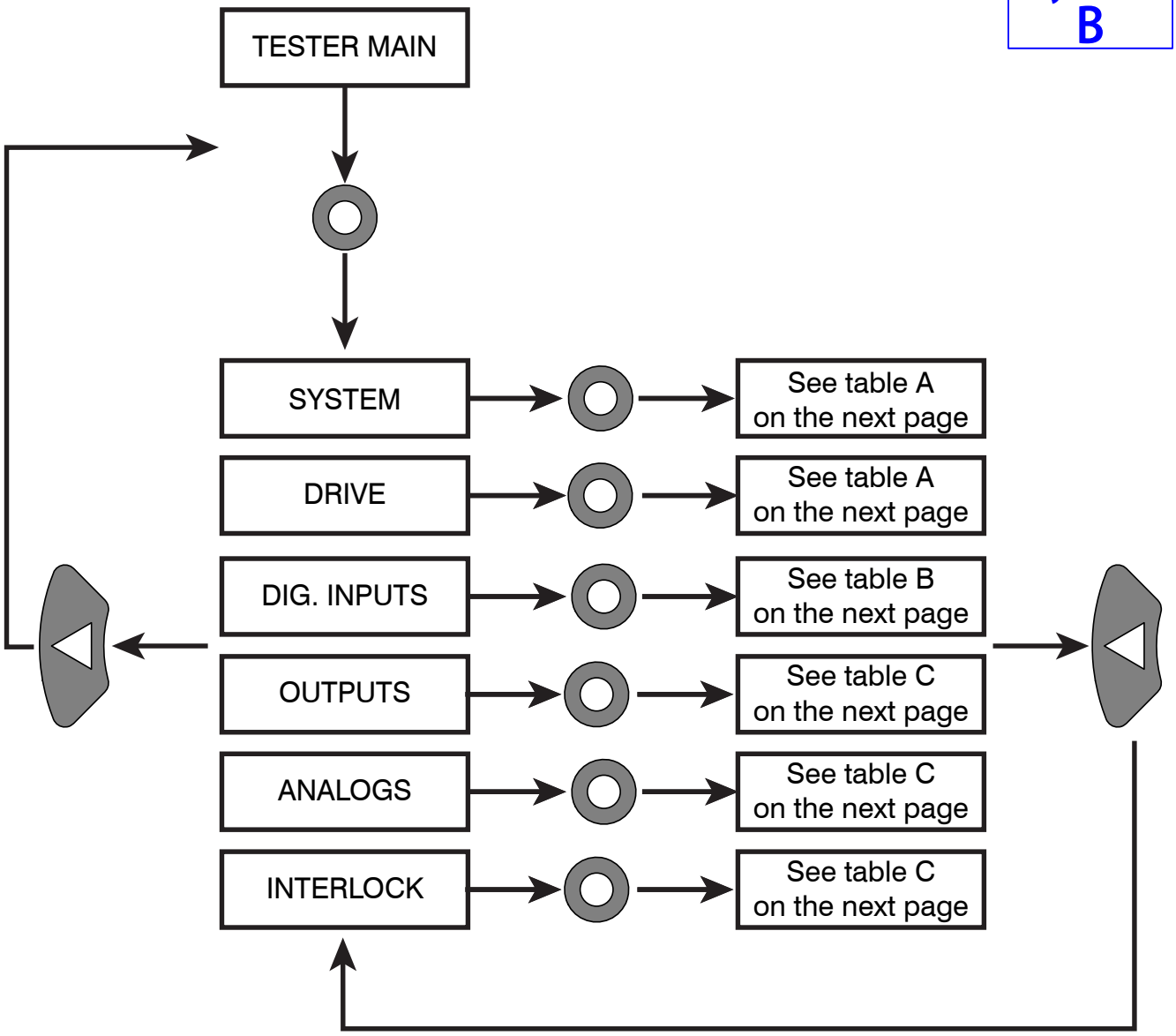

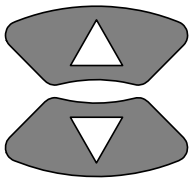

To scroll through menu items



To select

5.9-6 Tester main menu table A

SYSTEM	
KEY VOLTAGE (V)	Key voltage pin A3 measured in real time
BATTERY VOLTAGE (V)	Voltage from 03B contactor to B+ on controller
DC BUS CURRENT (amps)	Estimation of the battery current based on the working point.
BATTERY CHARGE (%)	Estimation of the battery charge based on the battery voltage
ELEVATED	Indicated if the machine is in the elevated state. 0=Stowed. 1=Elevated

DRIVE	
MOTOR VOLTAGE (%)	Estimated motor voltage.
TARGET SPD (Hz)	Targeted driving speed command in Hz.
MEAS. SPD MAIN (Hz)	Motor speed measured through the encoder (Hz) Right motor
MEAS. SPEED SEC (Hz)	Motor speed measured through the encoder (Hz) Left motor
DRV AMP MAIN	DC current occurrence on the right motor
DRV AMP SEC	DC current occurrence on the left motor
STEER ANGLE	Angle of steer wheels in degrees. 0 degrees with wheels straight. N/A for models SJ12 E, SJ16 E, SJ20 E, SJ3215 micro, SJ3219 micro, SJ3215 E, and SJ3219 E.
CONTROLLER TEMP (C)	Internal temperature of the controller.
MOTOR TEMP (C)	Internal temperature of the right motor.

2606AA-1

Skycoded B

5.9-7 Tester main menu table B

DIG. INPUTS	
DI16_B13	Not used
DI1_A6	Not used
DI2_A7	Input from Platform E-Stop S4 for Platform signal
DI7_B2	Input from S2 Lift/Lower switch for RAISE signal
DI11_B6	Input from S2 Lift/Lower switch for LOWER signal
DI12_B7	Input from S10 Idle/PLTF/Base Key switch for Base Signal
DI15_B12	Input from S10 Idle/PLTF/Base Key switch for Platform signal
DI13_B8	Input from S5 Diagnostic switch
DI17_B14	Not used
DI6_B1	Not used
DI8_B3	Input from LS1 limit switch (OFF when stowed)
DI14_B11	Input from S6 Brake Release Switch for Manually Releasing Brake signal (ON for Release)
DI9_B4	Input from Tilt switch AT1 (ON when level)
DI10_B5	Not used
DI0_A8	Input for Charger Cutout Interlock switch (ON when not charging)
DI4_A12	Input from LS1, LS2, Pothole protection limit switches.(ON Stowed)
DI5_A23	Ground input from Telematics option (ON when OK to operate)
DI3_A11	Not used
JOYD_1	Input from LIFT/OFF/DRIVE switch S3; Drive select
JOYD_2	Input from LIFT/OFF/DRIVE switch S3; Lift select
JOYD_3	Input from Horn switch S8
JOYD_7	Input from Platform E-Stop S4 for Platform signal
JOYD_8	Not used
JOYD_9	Not used
JOYD10	Not used
JOYD11	Not used
JOYD13	Input from enable switch
JOYD14	Input from left steer switch
JOYD15	Input from right steer switch

2606AA-2

Skycoded
B

5.9-8 Tester main menu table C

OUTPUTS	
A27	C1 motor contactor 0 or 100%
A28	Right motor BK1 brake 0 or 37%, up to 80% initial
A30	Left motor BK1 brake 0 or 37%, up to 80% initial
A26	Lower solenoid valve 2H-13 0 or 50% (NA, AS, KC) 3219 0 to 50% (CE) 3219, (all regions) 3215
A25	Output for lift solenoid valve 3H-14
A24	Output for steer right solenoid valve 4H-23
A1	Output for steer left solenoid valve 4H-24
A2	Output (pulsed) for beeper BP-29
JOYSTICK:FAULT	N/A
JOYO1	Platform e-stop/overload lamp PL-1
JOYO2	Drive lamp PL-3
JOYO3	Lift lamp PL-4
JOYO4	Low battery lamp PL-5
JOYO5	Not used
JOYO6	Not used
JOYO7	Not used
JOYO8	Not used
ALARM BEEPER	Not used (no valid values)
ALARM FLASHER	Not used (no valid values)

ANALOGS	
CHB_L-A19	“B” signal from left speed sensor (turns ON and OFF when wheels are turning)
CHA_R-A9	“A” signal from right speed sensor (turns ON and OFF when wheels are turning)
CHB_R-A20	“B” signal from right speed sensor (turns ON and OFF when wheels are turning)
A5	Not used
A16	Steering sensor input voltage 0.5-4.5 V (no valid values on models SJ3215 micro, SJ3219 micro, SJ3215 E, and SJ3219 E and VMEs)
A14	Not used (no valid values)
A22	Not used (no valid values)
A34	Not used (no valid values)
A35	Not used (no valid values)
B9	Not used
B10	Not used
JOYA 1	Joystick position (full stroke REV=6554, NEUTRAL=32768, full stroke FWD=58981).
JOYA 2	Not used
JOYA 3	Not used
JOYA 4	Not used
JOYA 5	Not used
JOYA 6	Not used
JOYA 7	Not used

Skycoded B

INTERLOCK	
EMCY_LOWER_CNT	Emergency lowering counter
TILT_PITCH	Reading of the internal tilt sensor in degrees from front to back
TILT_ROLL	Reading of the internal tilt sensor in degrees from side to side.
TILT_SW_STATUS	Status of the internal tilt sensor. 0=level. 1=tilted
ON GRADE	Status of the internal tilt sensor when driving on grade. 0=0-2.21 degrees. 1=2.22-15.7 degrees (FWD). 2.22-17.9 degrees (REV). 3=over 15.8 degrees (FWD). over 18 Degrees (REV)

2606AA-3

5.9-9 Tester sec menu

Skycoded B

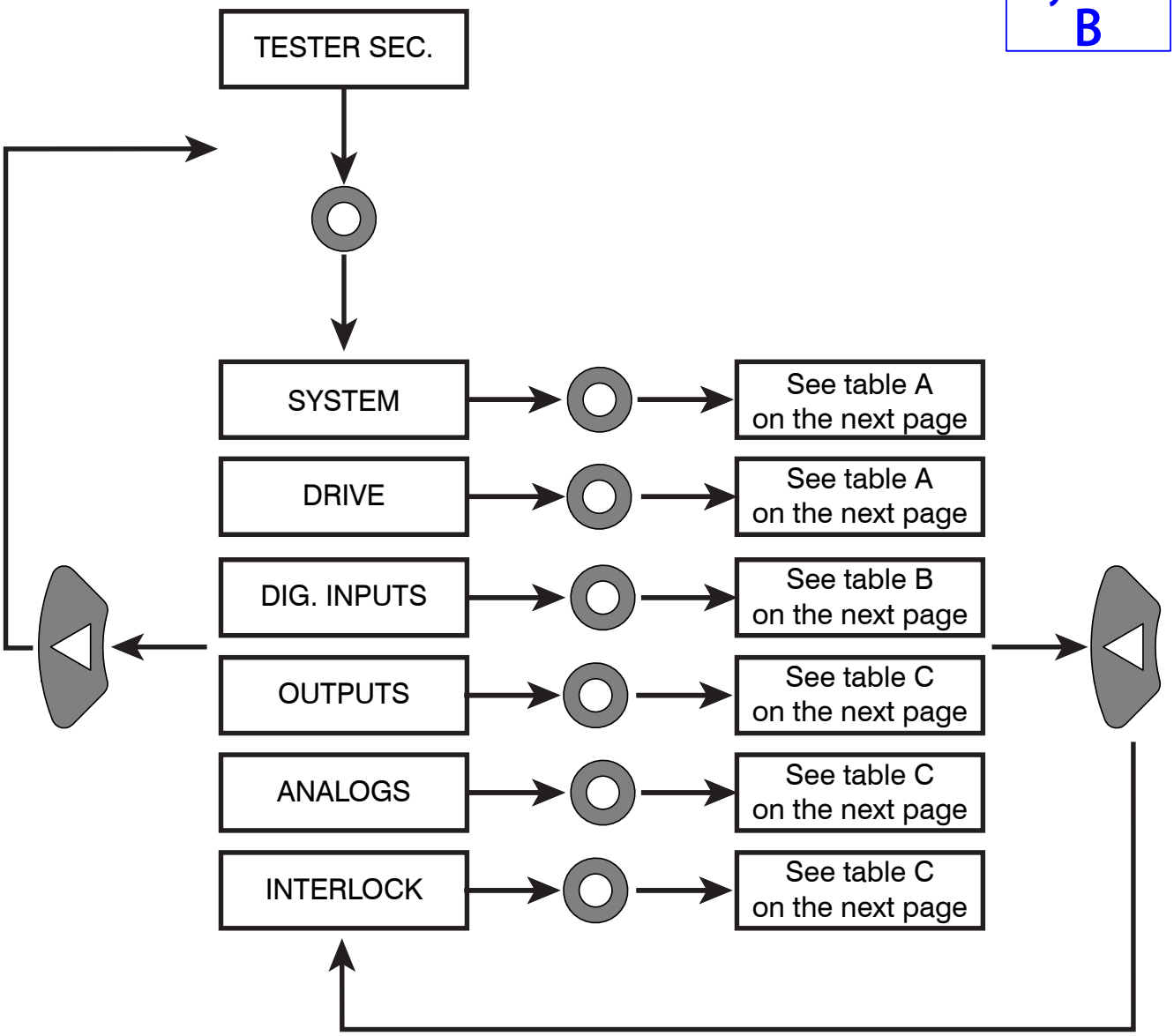

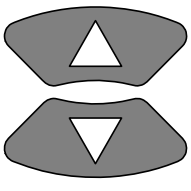

To scroll through menu items



To select

5.9-10 Tester sec menu table A

SYSTEM	
KEY VOLTAGE	Key voltage pin A3 measured in real time
BATTERY VOLTAGE	Voltage from 03B contactor to B+ on controller
DC BUS CURRENT	Estimation of the battery current based on the working point.
BATTERY CHARGE	Estimation of the battery charge based on the battery voltage

DRIVE	
MOTOR VOLTAGE	Estimated motor voltage.
TARGET SPEED (HZ)	Targeted driving speed command in Hz.
MEAS SPD MAIN	DC current occurrence on the right motor
DRV AMP MAIN	DC current occurrence on the left motor
STEER ANGLE	Angle of steer wheels in degrees. 0 degrees with wheels straight. N/A for SJ12 E, SJ16 E, SJ20 E.
CONTROLLER TEMP	Internal temperature of the controller.
MOTOR TEMP	Internal temperature of the left motor.
DC PUMP AMP	DC current of the pump motor (A)
DC PUMP VOLT	Percentage of voltage applied to the pump motor

2606AA-4

Skycoded
B

5.9-11 Tester sec menu table B

DIG. INPUTS	
DI16_B13	Not used
DI1_A6	Not used
DI2_A7	Input from Platform E-Stop S4 for Platform signal
DI7_B2	Input from S2 Lift/Lower switch for RAISE signal
DI11_B6	Input from S2 Lift/Lower switch for LOWER signal
DI12_B7	Input from S10 Idle/PLTF/Base Key switch for Base Signal
DI15_B12	Input from S10 Idle/PLTF/Base Key switch for Platform signal
DI13_B8	Input from S11 Powerdeck switch for PD Extend (SJ3220 option only)
DI17_B14	input from LS7, Anti overrising option (KC only)
DI6_B1	Not used
DI8_B3	Input from LS7, Anti overrising option (KC only)
DI14_B11	Input from S6 Brake Release Switch for Manually Releasing Brake signal (ON for Release)
DI9_B4	Input from Tilt switch TS1 (ON when level)
DI10_B5	Input from S11 Powerdeck switch for PD Retract (SJ3220 option only)
DI0_A8	Input for Charger Cutout Interlock switch (ON when not charging)
DI4_A12	Input from LS1, LS2, Pothole protection limit switches (ON Stowed)
DI5_A23	Ground input from Telematics option (ON when OK to operate)
DI3_A11	Not used
JOYD_1	Input from LIFT/OFF/DRIVE switch S3; Drive select
JOYD_2	Input from LIFT/OFF/DRIVE switch S3; Lift select
JOYD_3	Input from Horn switch S8
JOYD_7	Input from Platform E-Stop S4 for Platform signal
JOYD_8	Not used
JOYD_9	Not used
JOYD10	Not used
JOYD11	Not used
JOYD13	Input from enable switch
JOYD14	Input from left steer switch
JOYD15	Input from right steer switch

2606AA-5

Skycoded
B

5.9-12 Tester sec menu table C

OUTPUTS	
B22 EVP2	Output to CR30 brake relay
B16 EV5	Not used
B17 EV6	Not used
B18 EV7	Base e-stop/overload lamp PL-2
B20 EV8	Flashing light PL-22
JOYSTICK:FAULT	N/A
JOY01	Platform e-stop/overload lamp PL-1
JOY02	Drive lamp PL-3
JOY03	Lift lamp PL-4
JOY04	Not used
JOY05	Not used
JOY06	Not used
JOY07	Not used
JOY08	Not used

ANALOGS	
CHA_L-A17	Input from Channel A signal from left motor speed sensor (turns ON and OFF when wheels are turning)
CHB_L-A19	Input from Channel B signal from left motor speed sensor (turns ON and OFF when wheels are turning)
A5	Signal from pressure transducer
A16	Steering sensor input voltage 0.5-4.5 V (no valid values on models SJ3215 micro, SJ3219 micro, SJ3215 E, and SJ3219 E)
A14	Not used (no valid values)
A22	Not used (no valid values)
A34	Not used (no valid values)
A35	Not used (no valid values)
B9	Signal from position sensor (no valid values, see HEIGHT2 on Main Tester)
B10	Signal from position sensor (no valid values, see HEIGHT1 on Main Tester)
JOYA 1	Joystick position (full stroke REV=6554, NEUTRAL=32768, full stroke FWD=58981).
JOYA 2	Not used
JOYA 3	Not used
JOYA 4	Not used
JOYA 5	Not used
JOYA6	Not used
JOYA 7	Not used

INTERLOCK	
TILT_PITCH	Reading of the internal tilt sensor in degrees from front to back
TILT_ROLL	Reading of the internal tilt sensor in degrees from side to side.
TILT_SW_STATUS	Status of the internal tilt sensor. 0=level. 1=tilted

2606AA-6

Skycoded B

5.9-13 Parameter menu

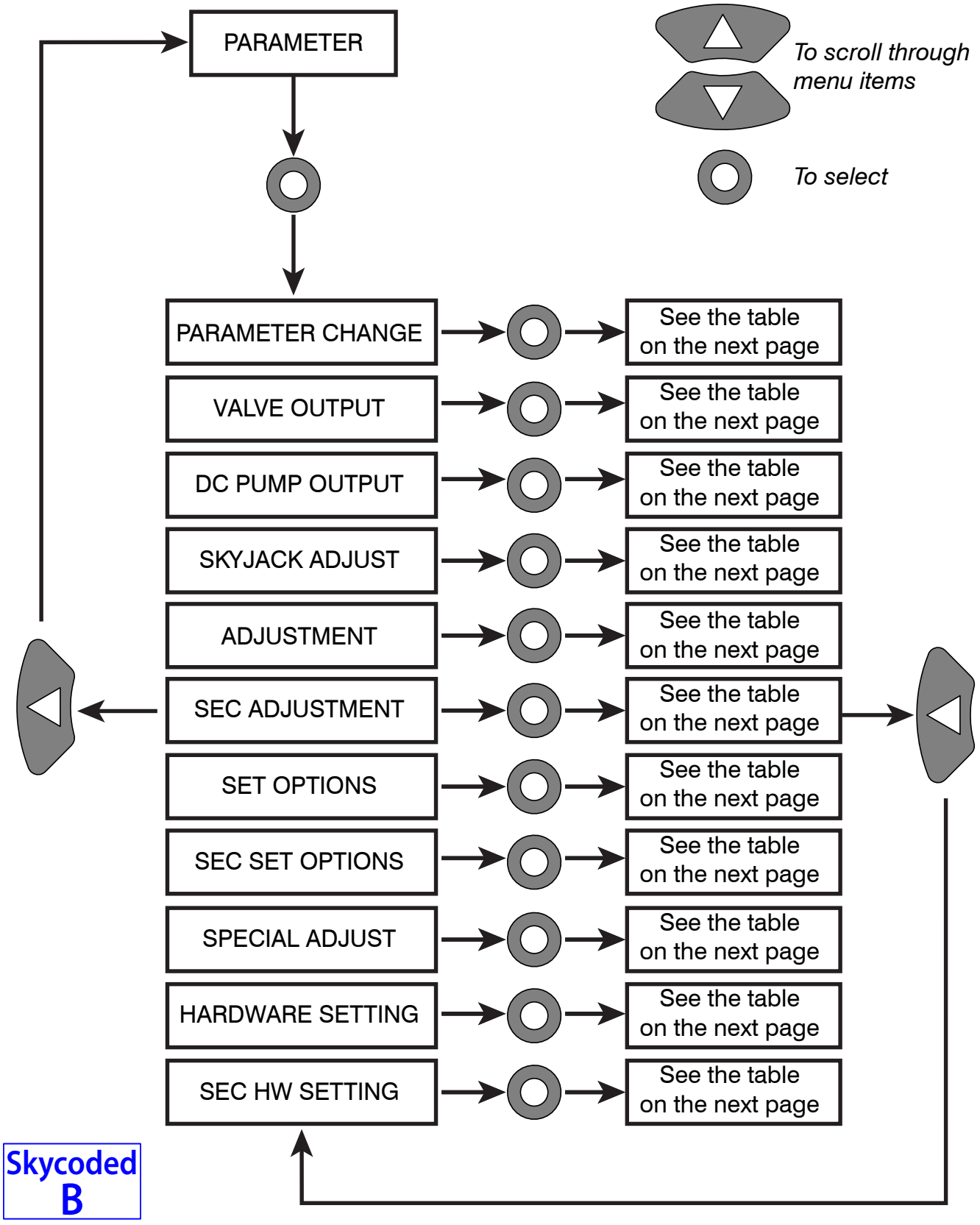

5.9-14 Parameter menu table

PARAMETER CHANGE	VALVE OUTPUT	DC PUMP OUTPUT	SKYJACK ADJUST	ADJUSTMENT
MAX SPEED FORW	SEV8 FLASHER OUT	MAXSTEER PUMP SP	MACHINE TYPE	NO VALID VALUES
MAX SPEED REV		MINSTEER PUMP SP	REGION	
			BATTERY TYPE	
			LIFT DERATE 1	
			LIFT DERATE 2	
			MOTION ALARM	
			DELTA-Q CHARGER	
			TELEMATICS	
			OUTDOOR MODE	

SEC. ADJUSTMENT	SET OPTIONS	SEC. SET OPTIONS	SPECIAL ADJUST	HARDWARE SETTING	SEC. HW SETTING
NO VALID VALUES	NO VALID VALUES	TILT CALIBRATE	DEBUG CANMESSAGE	NO VALID VALUES	NO VALID VALUES

2606AA-7

After you change a parameter you must follow the “Store Data” flowchart to save the change. Refer to *5.9-18 Store data menu.*

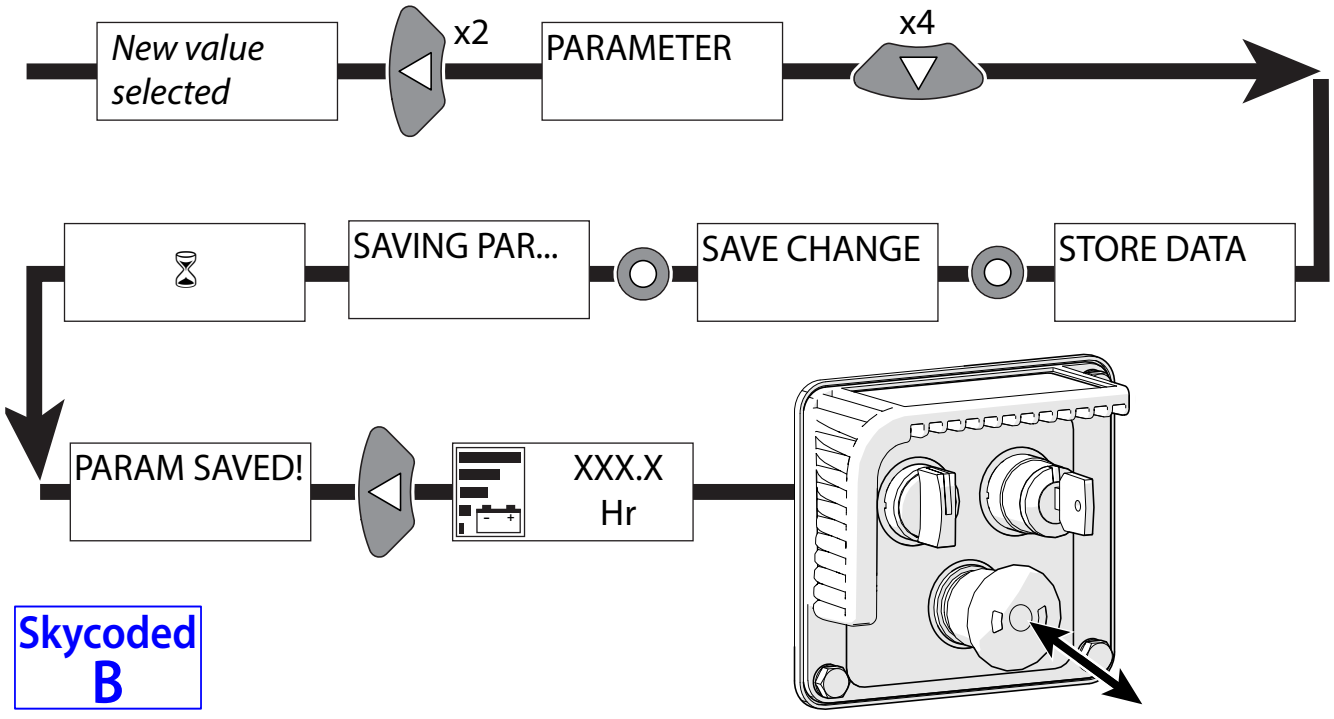

5.9-15 Machine setup menu

Skycoded B

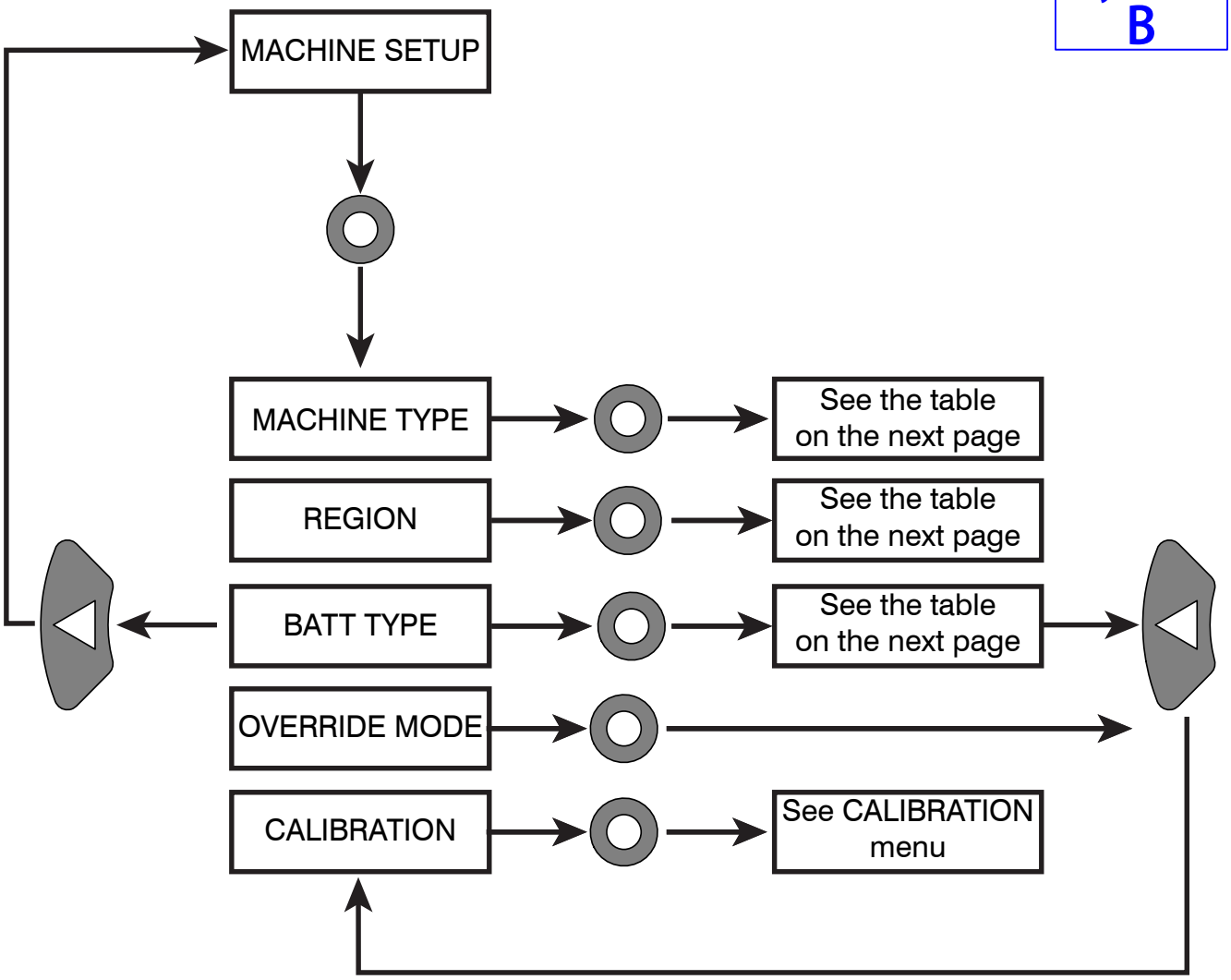

Note: When you set up a new controller, if a MEWP was built with options (e.g., flashing light, telematics, all-motion alarm, anti-overrising posts (KC), etc.), you will need to do additional setup. Refer to *5.9-13 Parameter menu* and *5.9-14 Parameter menu table.*

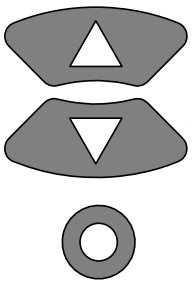

To scroll through menu items

To select

5.9-16 Machine setup menu table

MACHINE TYPE	REGION	BATTERY TYPE
SJ12	ANSI	US 12V 155 Ah
SJ16	CE	US 2200 XC2 232 Ah
SJ20	AS	

2606AA-8

Skycoded
B

5.9-17 Logged alarms M/S menu

Skycoded B

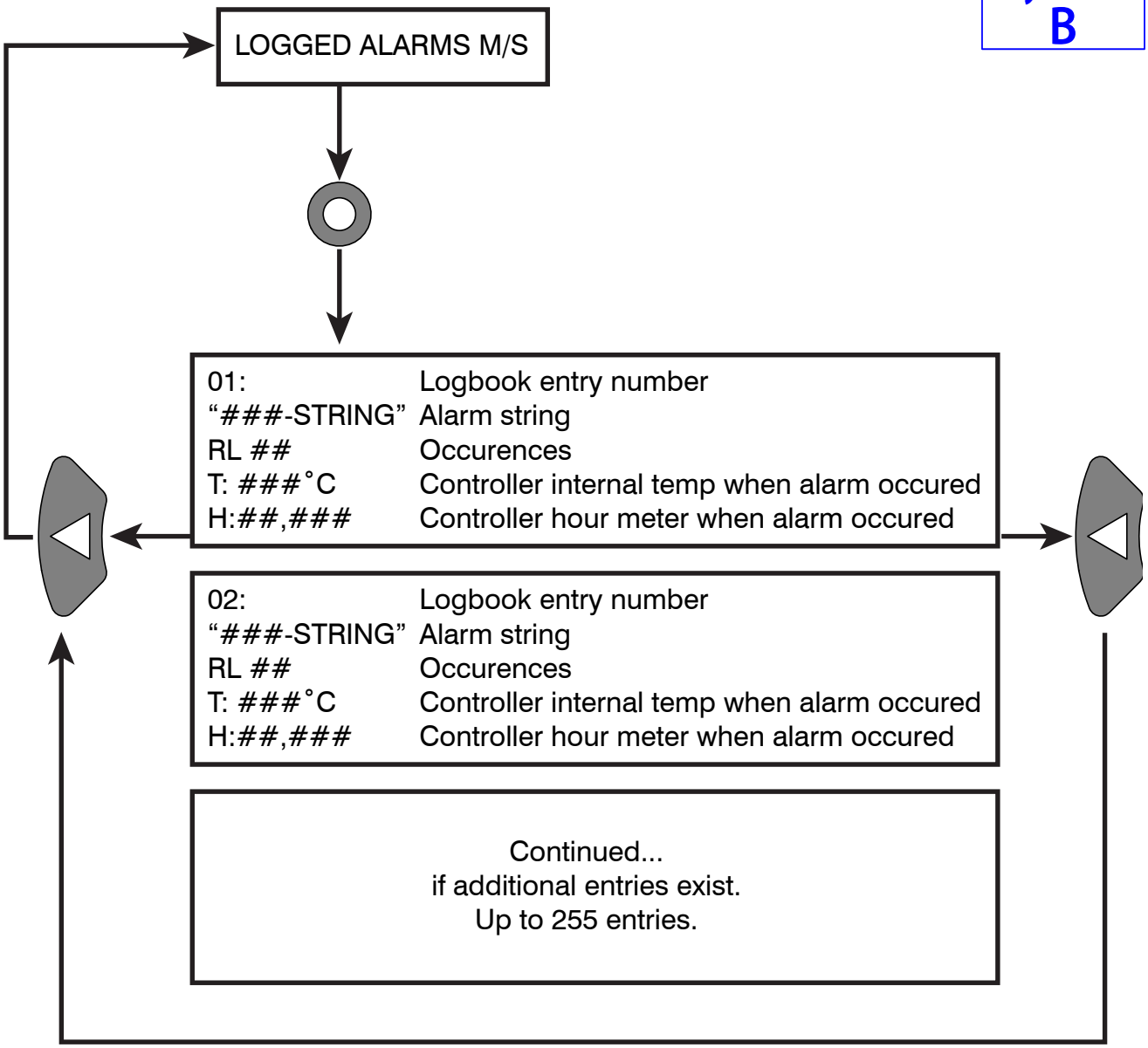

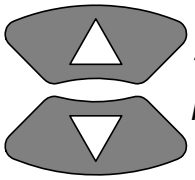

To scroll through menu items



To select

5.9-18 Store data menu

Skycoded B

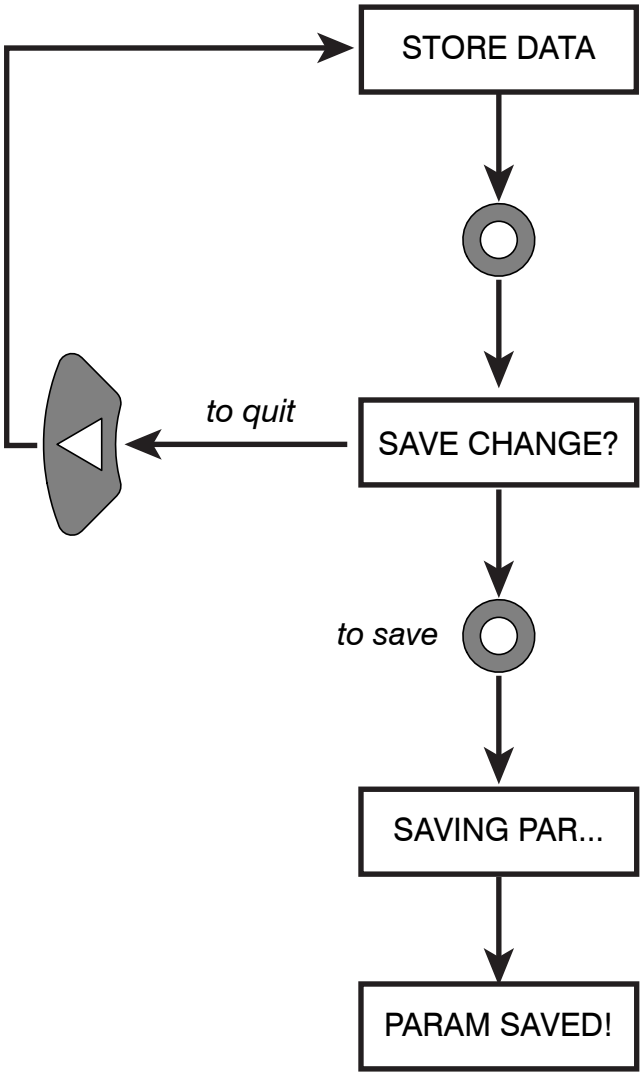

Display will flash: "SAVING PAR..." until save is done

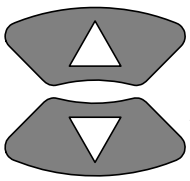

To scroll through menu items



To select

5.9-19 Calibration menu

Skycoded B

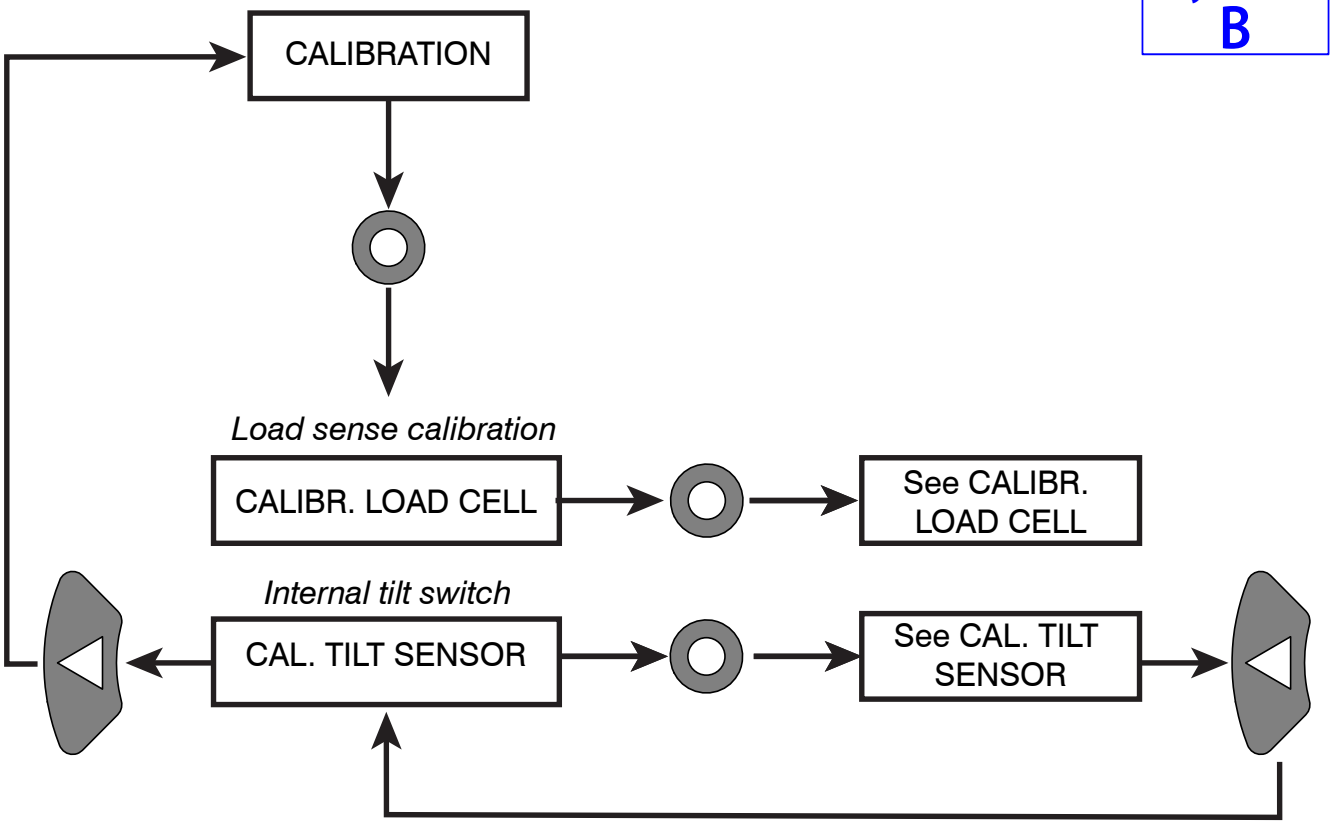

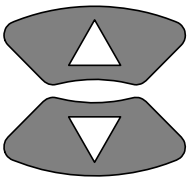

To scroll through menu items



To select

5.9-20 Load sense calibration - nominal weight menu

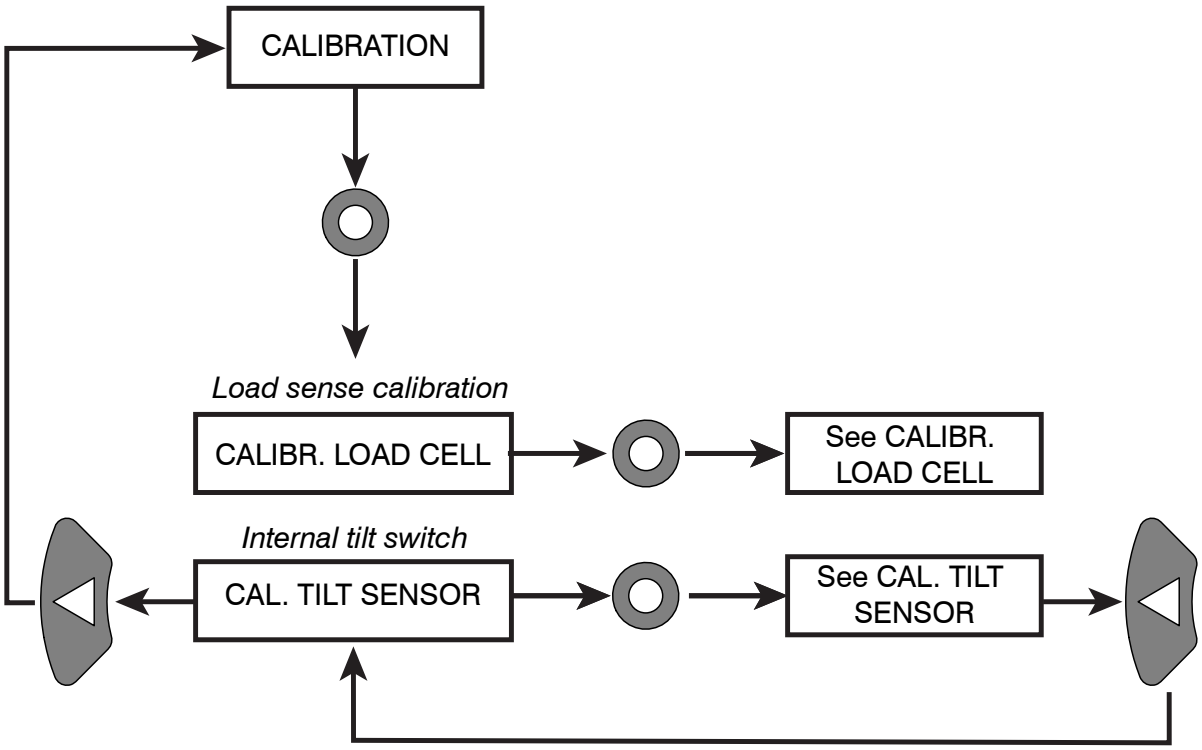

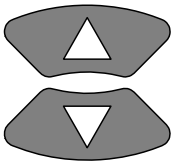

To scroll through menu items



To select

Skycoded B

5.9-21 Load sense calibration - partial calibration menu

Skycoded B

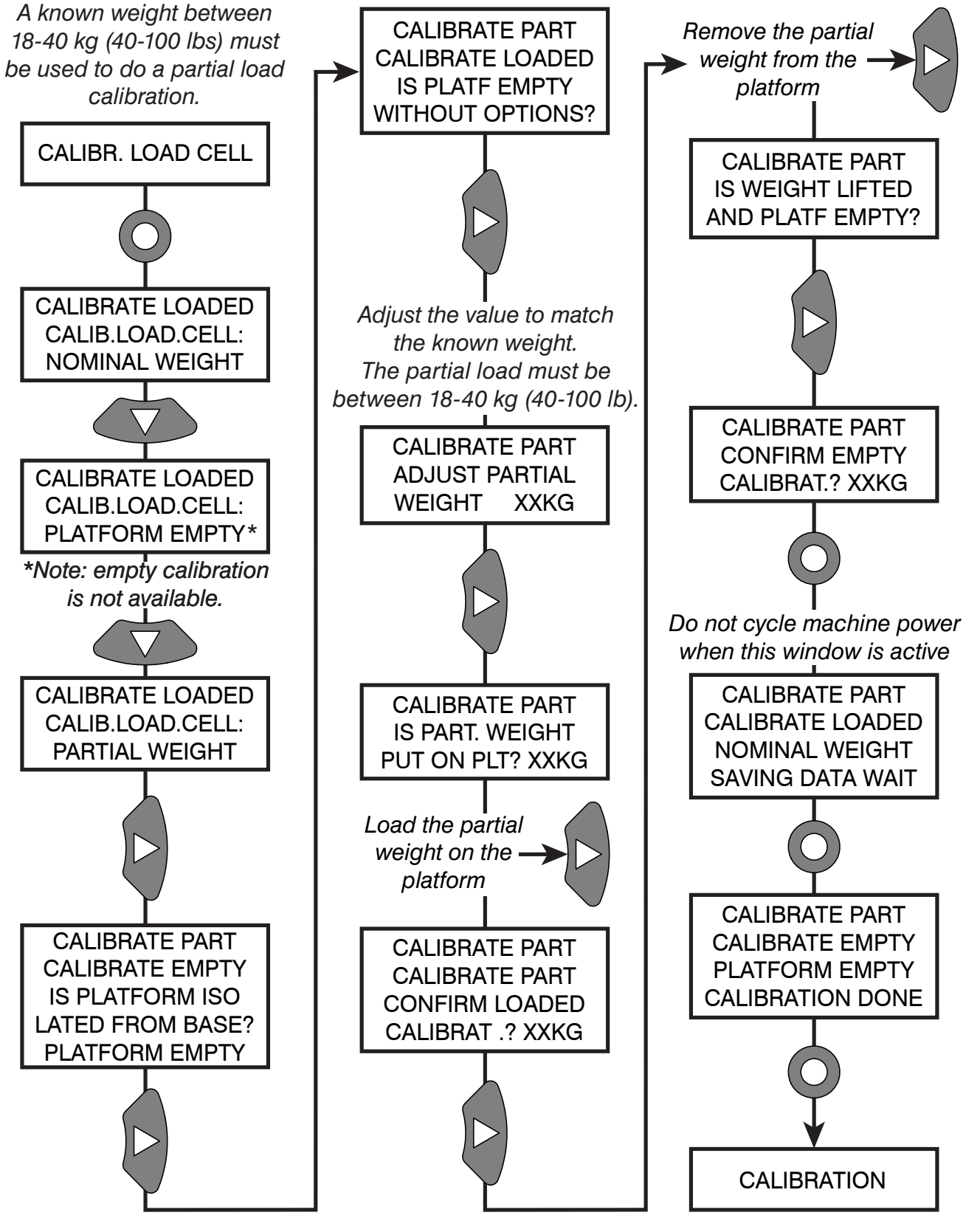

5.9-22 Calibrate internal tilt sensor menu

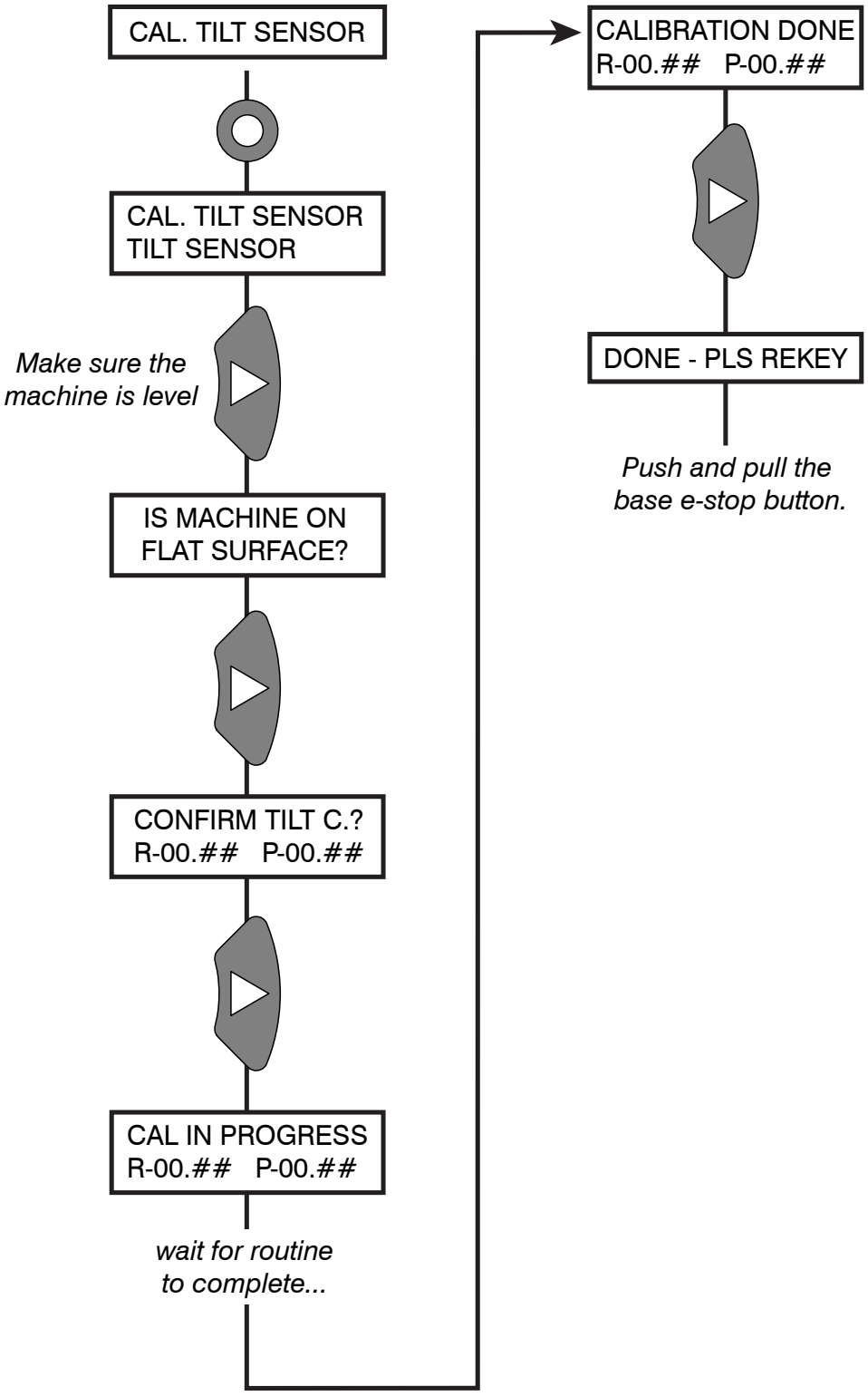

Skycoded B

5.9-23 Skycoded B error codes and troubleshooting

Skycoded B

Confirm the correct model, region, and battery type are selected before you start troubleshooting.

Code	Code String	Cause	Troubleshooting
8	8-CTRL ERR	Controller internal error.	Cycle the power. If still present, replace controller.
17	17-CTRL ERR	Controller internal error.	Replace the controller. Cycle the power. If still present, replace controller.
18	18-CTRL ERR	Controller internal error.	Cycle the power. If still present, replace controller.
19	19-CTRL ERR	P1 pin 3 detect low voltage, check wire connection and power cable voltage.	Check power cable connections P- and B+ are not swapped. Could be internal to controller or internal damage to wire A3 (continuity might be OK, but cannot hold high amp). Replace harness.
28	28-PMP VLT LOW	Pump motor voltage lower than expected.	Check power cable connection and leakage between motor and motor frame.
29	29-PMP VLT HI	Pump motor voltage higher than expected.	Check power cable connection and leakage between motor and motor frame.
30	30-TRAC VLOW	Traction motor voltage lower than expected.	Check power cable connection and leakage between motor and motor frame.
31	31-TRAC VHI	Traction motor voltage higher than expected.	Check power cable connection and leakage between motor and motor frame.
37	37-CONTCT CLOSE	Power to contactor is properly connected, but contactor is stuck closed.	Check the condition of the contactor
38	38-CONTCT OPN	Power to contactor is properly connected, but contactor is stuck open.	Check power cable connection and leakage between motor and motor frame.
52	52-PMP AMP LOW	Pump motor running current is lower than commanded.	Check pump power cable connection.
53	53-PMP AMP HI	Pump motor running current is higher than commanded	Check pump power cable connection.
60	60-CTRL ERR	Controller internal error. Cycle the power. If still present, replace controller.	Cycle the power. If fault is still there, replace the controller.
62	62-CTRL TEMP	Controller internal temprature is too high. Exceeding 85 °C.	Check the tester menu DRIVE-CONTROLLER TEMP. Allow the controller to cool if hot. If the fault occurs when the controller is cold, replace the controller.
65	65-TRAC MOT TMP	Traction motor temp is too high.	Check tester menu DRIVE-MOTOR TEMP. If temp is incorrect, replace the motor.
66	66-LOW BATTERY	Battery state of charge is lower than 10%.	Check the condition of the batteries and charge.
74	74-CTRL ERR	Controller internal error. Cycle the power. If still present, replace the controller.	Cycle the power. If the fault is still there, replace the controller.
75	75-CTRL ERR	Controller internal error. Cycle the power. If still present, replace the controller.	Cycle the power. If the fault is still there, replace the controller.
79	79-ENABLE ERR	Joystick is active before enable is engaged.	Check on tester. Repeat the command with the correct sequence. Check joystick wiring.

Code	Code String	Cause	Troubleshooting
118	118-BMS FAULT 118-SGS ERR	The Skyprotect (SGS) option is active, but the controller is not communicating with the sensor, or an incorrect platform control box is being used.	Verify the control box is correct for the machine and is equipped with the Skyprotect option. Check wiring to the control box and SGS sensor.
119	119-STEER OR	The voltage reading of the steer sensor is outside the calibrated range by ±500 mV, or is less than 0.5 V or greater than 4.5 V.	Check the calibrated values. Check the wiring supply voltage. Check for a short/open circuit on the steer sensor.
121	121-FACTORY MODE	Machine is in factory mode. Can drive and lift, needs calibration.	Controller needs to be calibrated.
122	122-ELOW SHRT +	A29 short to power.	Check wiring on pin A29. Short to B+ detected.
123	123-LOWER SHRT -	Short to B- detected at A29.	Check wiring on pin A29. Short to B- detected.
129	129-JSTK HRTBT	Joystick failed, no CAN heartbeat.	Check the joystick wiring. Replace the joystick.
130	130-EBRK RELEASE	Emergency brake released.	Emergency brake release is active. Exit tow mode to clear. Enable any function to clear.
131	131-ANTI OVRAISE	Antioverraise is triggered, no lifting allowed.	Lower the platform (KC only).
132	132-ANTOVR ERR	Antioverraise signal from normally open/close are the same, check wiring.	Check limit switch wiring on the Anti Overrise Option (KC only).
133	133-TELEMATIC	Telematic interlock, no password or lost CAN communication from telematic device.	Enter correct PIN password (if equiped). Check wiring and condition of the telematics.
134	134-TRAC LO BAT	Battery voltage is too low to drive, Lead acid battery <15.8V, AGM <19V, Lithium <20V.	Check the condition of the batteries and charge.
135	135-OVER GRADE	Machine over climbing range (too steep).	Check the calibration of the internal tilt sensor. Replace the controller.
137	137-CHARGER CAN	Charger does not send startup CAN message, need to plug in charger at least 15 sec to initilize charger.	Verify the charger is connected and powered on for a minimum of 15 seconds. Verify the charger CAN communication. Check the wiring.
140	140-LIFT LO BAT	Battery voltage is too low to lift, Lead acid battery <18.8V, AGM <21V, Lithium <22V.	Check the condition of the batteries and charge.
141	141-TILT ERR	Faulty controller.	Replace the controller.
142	142-CHARGING	Charger is connected.	Disconnect charger. Check wiring
143	143-POTHO ERR	143-POTHO ERR01: pothole deployed when platform stowed. 143-POTHO ERR02: pothole NOT depolyed when lifted.	Check pothole position and connections.
144	144-CTRL ERR	Faulty controller.	Replace the controller.
145	145-GRADE ERR	Faulty controller.	Replace the controller.
146	146-PLT OVERLOAD	Platform is overloaded.	Check the load on the platform. Check the load cell calibration.
147	147-LS NO CAL	147-LS NO CAL 01: Loadsense is not calibrated.	Perform the load calibration.
		147-LS NO CAL 02: Loadsense is calibrated but the result is out of range.	Check height and pressure sensor reading

Code	Code String	Cause	Troubleshooting
148	148-LIFT PRES OR	Lifting pressure transducer voltage is out of range: below 0.4V or above 4.6V. Or service bar is in place	Check the wiring to the pressure transducer. Check that the pressure transducer is not damaged.
149	149-HEIGHT MISM	The height from the main and redundant height sensor signals are more than 5% different for more than 5 seconds.	Check the main tester menu ANALOGS/ HEIGHT1 and HEIGHT2. The two readings added together should equal 5 V (+/-0.2V) at any height (HEIGHT1=3.75 V, HEIGHT2= 1.25 V when stowed). If the readings are good, do an empty calibration.
150	150-HEIGHT OR	Height sensor voltage is out of range: below 0.4V or above 4.6V.	Check the wiring for the rotary height sensor. Check that the rotary height sensor is not faulty. Verify that the supply voltage is present and correct to the sensor.
151	151-KEY SW ERR	Platform and base modes are ON/ OFF at the same time.	Check the wiring and the base/platform switch.
152	152-ENABL TIMEOT	Enable button is pushed with no command for drive/lift within 10 sec	Release the enable switch.
153	153-ENC ERR	May be caused by driving on uneven surface.	Cycle the power. Check the driving surface is even and smooth. Check the motor wiring for speed sensor wires. Cycle the power again and drive it on a flat surface. Swap the motor.
154	154-TRAC MISM	Alarm on Master is Right Side Motor and on Slave is Left Side Motor.	Cycle the power. Check the driving surface is even and smooth. Check the motor wiring for speed sensor wires. Cycle the power again and drive it on a flat surface. Swap the motor.
155	155-SPD MISM	Alarm on Master is Right Side Motor and on Slave is Left Side Motor.	Cycle the power. Check the driving surface is even and smooth. Check the motor wiring for speed sensor wires. Cycle the power again and drive it on a flat surface. Swap the motor.
156	156-BASE SEQ	156-BASE SEQ 01: switching to base mode with base lift input active.	Repeat the command sequence. Check the wiring.
		156-BASE SEQ 02: switching to base mode with base lower input active.	
		156-BASE SEQ 04: switching to base mode with emergency lowering active input active.	
		156-BASE SEQ 08: switching to base mode with brake release input active.	
		156-BASE SEQ 81: switching to platform mode with joystick out of neutral	
		156-BASE SEQ 82: switching to platform mode with steer left input active.	
		156-BASE SEQ 84: switching to platform mode with steer right input active.	
		156-BASE SEQ 88: switching to platform mode with Platform Power Deck Extend input active.	

Code	Code String	Cause	Troubleshooting
156	156-BASE SEQ	156-BASE SEQ 90: switching to platform mode with Platform Power Deck Retract input active.	Repeat the command sequence. Check the wiring.
156	156-BASE SEQ	156-BASE SEQ A0: switching to platform mode with Emergency Lowering Active input active.	Repeat the command sequence. Check the wiring.
		156-BASE SEQ C0: switching to platform mode with Brake Release input active.	
157	157-TRAC ERR	A mismatch occurred in the sampling of a subset of inputs between the two microcontrollers. The hexadecimal value “XX” facilitates Zapi technicians debugging the problem.	Ask for assistance to a Zapi technician.
158	158-DRIVE+LIFT	Drive/lift mode command received at the same time. If SGLE is installed, this error appears when trying to lift or drive without holding in the SGLE button on the side of the control box.	Verify the joystick module is not internally damaged. Check wiring from the drive enable and lift enable switches in the joystick module. If SGLE is installed, press the SGLE button to clear the error.
159	159-STEER R+L	Steer left/right command received at the same time.	Verify the Joystick Module is not internally damaged. Check wiring from Steer Left and Steer right switches in joystick module.
160	160-TILTED	Machine is tilted.	Check the surface. Check the tilt sensor installation/ calibration.
161	161-CAN KO	The display does not detect CANbus activity from the controller. It might appear briefly when the upper E-Stop is pushed in.	Check the CAN wiring from the controller to the display.
163	163-TRAC ERR	Alarm related to the motor control algorithm.	Ask for assistance from Zapi technicians.
164	164-POWER SAVE	Machine in power save mode. Default is 5 min no action command.	Activate a function to clear - drive, lift, horn
169	169-POWER SAVE	This alarm occurs only when the controller is configured as PMSM and the feedback sensor selected is the encoder. The A and B pulse sequence is not correct. The hexadecimal value “XX” facilitates Zapi technicians debugging the problem.	Check the wiring. If the motor direction is correct, swap the A and B signals. If the motor direction is not correct, swap two of the motor cables. If the problem is not solved, contact a Zapi technician.
170	170-VOLT OR	Battery voltage too low/high.	Check the battery voltage.
175	175-TRAC ERR	Could be an issue with the speed sensor positioning/mounting.	Check both the electric and the mechanical functionality of the sensor. Check the wire crimping. Check the mechanical installation of the sensor; the issue may be it slips inside its housing. If the problem is still present after replacing the sensor, the failure is most likely in the controller; replace it.
177	177-BRK SHORT	Brake coil on motor is shorted / Brake relay is shorted. / Main Harness is shorted at A28 or A30 to 08C.	Check the brake coil for short. Check for brake relay for short. Check the harness for short. Replace/repair the shorted component.

Code	Code String	Cause	Troubleshooting
178	178-TRAC TEMP	Motor temperature is too high over 170 °C/338 °F.	Check the MOTOR TEMPERATURE in TESTER. If hot, allow it to cool down. If the tempereature reading is incorrect, replace the motor.
179	179-STEER SENSOR	Steer sensor voltage is out of range.	Measure the Voltage from the Steering Sensor and compare with the calibrated STEER LEFT; STEER RIGHT voltage values. Check the Sensor for damage as well as open or shorted Supply wiring to Sensor.
180	180-TRAC OVLD	The motor current is over the designed current.	Cycle the power. Manually release the brake. Motor should spin freely if not, check if the brake is released. Replace the motor. If the brake is not released, replace the brake.
181	181-ENCODER ERR	Speed sensor signals are reversed/ faulty.	Check speed sensor functions. Replace if needed.
182	182-TRAC ERR	This alarm is related to the traction motor(s) encoder.	Possible swapped phases of encoder sensor(s).
183	183-NO ELEV DRV	Drive elevated is not allowed.	Default ON parameter for KC and OFF for other regions. It can be turned on/off by password 1275 on display under “SKYJACK ADJUST”.
184	184-CHK SGLE SW	SGLE switch is not pushed while command lifting. Or check control box wiring.	Check the SGLE wiring and switch if equipped.
186	186-PUMP ERR	Current leakage in DC Motor	Check for DC motor leakage. Replace DC motor, if needed.
187	187-LIFT+LOWER	Lift and Lower active at same time	Check the joystick CAN connections. Check lower control box lift/lower swtich.
188	188-CTRL ERR	Faulty controller.	Replace the controller.
189	189-PLT SEQ ERR	Function active without enable switch.	Repeat the command sequence with enable switch. Replace joystick if issue persists.
190	190-CHK PMP CONN	Voltage fluctuation during start up at P- Pump motor or controller.	Check all connections at pump motor. Check pump motor leakage. Replace controller if no problem found.
191	191-A1 ERR	KC option	
192	192-A1 ERR	KC option	
193	193-CTRL ERR	Faulty controller.	Replace the controller.
194	194-CTRL ERR	Faulty controller.	Replace the controller.
195	195-BRK ERR	Controller detecting a short on A29 on start up. With the code in master, the short is at lowering coil. With the code in slave, the short is on the brake relay.	Check coil for short and check harness to lowering coil for short. Check brake relay for short.
196	196-TRAC PHASE	Short between wheel motor phase connections (U,V,W) or internall wheel motor.	Check for short on wheelmotor phases connections (U, V, W) at motor side/controller side. If short, replace wheel motor.
197	197-SOFTWARE VER	Mismatch between main and secondary software.	Check the software versions between main and secondary software. Flash it to the latest version. If error still persist replace the controller.
198	198-PARA MISM	Mismatch between main and secondary paramters	Restore and save the parameters list.

Code	Code String	Cause	Troubleshooting
199	199-PARA TRANSF	parameter change is saving, wait longer, otherwise cycle the power.	Confirm paramters and save properly. Adjust paramters as required.
200	200-CTRL ERR	Battery is out of range (too high)	Check the battery voltage, if it is out of range replace the battery.
201	201-M1 ERR	There is an error in the choice of the torque profile parameters.	Check the values of those parameters under HARDWARE SETTINGS and SLV HARDWARE SETTINGS lists.
202	202-BATT HI V	Battery is out of range (over 35 V)	Check the battery voltage, if it is out of range replace the battery. If no problem can be found, replace the controller.
203	203-GRADE NO CAL	Tilt calibration not performed.	Perform the internal tilt calibration.
206	206-CTRL ERR	206-CTRL ERR 81: Battery positive is short to motor phase U.	Check power cable connections for short. Check motor leakage test. If the motor connections are OK and no internal shorts found, then the problem is within the controller. Replace it.
		206-CTRL ERR 82: Battery positive is short to motor phase V.	
		206-CTRL ERR 83: Battery positive is short to motor phase W.	
207	207-CTRL ERR	207-CTRL ERR 01: Battery negative is short to motor phase U.	Check power cable connections for short. Check motor leakage test.If the motor connections are OK and no internal shorts found, then the problem is within the controller. Replace it.
		207-CTRL ERR 02: Battery negative is short to motor phase V.	
		207-CTRL ERR 03: Battery negative is short to motor phase W.	
208	208-CTRL ERR	Parameter setting is out of range.	Clear EEPROM. Flash the software. Replace the controller if error still persists.
209	209-PARA RESTORE	The controller has restored the default settings. If a CLEAR EEPROM has been made before the last key re-cycle, this warning informs you that EEPROM was correctly cleared.	If the alarm appears at key-on without any CLEAR EEPROM performed, replace the controller.
210	210-CTRL ERR	Something wrong with machine memory.	Try to switch the key off and then on again. If the alarm is still present replace the controller.
211	211-STALL ROTOR	Traction motor is stuck or incorrect speed sensor signal.	Try to manually release the brake to see if motor rotates. Check speed sensor condition. Check motor wiring. Through the TESTER function, check if the sign of FREQUENCY and ENCODER are the same and if they are different from zero during a traction request.
212	212-M2 ERR	Faulty controller.	Check battery voltage. If no problem found, replace controller.
213	213-CONTCT ERR	Voltage is low at A27 or at wire 19 at contactor.	Check contactor voltage when turned ON. Check wire 19 on contactor.
214	M214-LOW COIL OPN	Open circuit between controller to lowering solenoid	Check lower solenoid, not connected or open circuit. Replace with different lower coil, if not working, check the harness continuity between A26 and A29 to lowering solenoid connector.If continuity is good, replace the controller.

Code	Code String	Cause	Troubleshooting
214	S214-EVP LOW COIL OPN	Open circuit between controller to brake relay	Check continuity for open circuit between pin B22 of controller and pin 10 of the Emergency Lowering Board connection in harness. Check continuity between pin 7 of base e-stop connector to pin 9 of the emergency lowering PCB.
215	215-LO COIL SHRT	Short between controller to lowering solenoid. Short in lowering coil.	Check lower solenoid, not connected or short. Replace with different lower coil; if not working, check the harness continuity between A26 and A29 to lowering solenoid connector. If continuity is good, replace the controller.
215	215-EVP DRV SHRT	Short between controller to brake relay. Short in brake relay.	Check continuity for short between pin B22 of controller and pin 10 of the Emergency Lowering Board connection in harness.
216	216-BRK ERR	Open circuit between controller A28 to 2 Pin Connector (Wire 17R) on the right motor brake. Open circuit between controller A30 to 2 Pin Connector (Wire 17L) on the left motor brake.	*Right* - Check continuity between controller A28 and 2 pin brake connector (Wire 17R). Check diode D17R. *Left* - Check continuity between controller A30 and 2 pin brake connector (Wire 17L). Check diode D17L. If no continuity, replace the harness. If continuity is good, try to manually release the brake. If the brake does not release, replace the brake.
217	217-CB2 PWR	Low voltage/no voltage at Pin A13 at controller.	Check CB2 circuit breaker. Replace/reset breaker if bad. If good, check from CB2 circuit breaker to Pin A13 (wire 03C) at controller.
218	218-TRAC TMP OPN	Master: Temperature sensor is not connected on right motor.	Check for open circuit at motor 6 pin connector on right motor.Check continuity A32 and A21 at controller. If connection is good, replace the motor.
		Slave: Temperature sensor is not connected on left motor.	Check for open circuit at motor 6 pin connector on left motor.Check continuity A33 and A15 at controller. If connection is good, replace the motor.
219	219-2H-13 ERR	Low Voltage/ No Voltage at Pin A13 at controller.	Check CB2 circuit breaker. Replace/Reset breaker if bad. If good, check from CB2 circuit breaker to Pin A13 (wire 03C) at controller.
220	220-08C V LOW	Voltage from the key-on is very low.	Check battery connections and voltage. If battery voltage is ok, then replace the controller.
222	222-NO CONFIG	Machine type/region not selected. Controller not configured.	Controller needs to be set up. Machine type and Region need to be selected.
223	223-CONTACT SHT	Contactor is shorted.	check contactor function. Check the harness to the contactor.If contactor not working, replace the contactor.
224	224-CHK SLAVE	Error on Slave Side.	Check error on Slave Side.
225	225-DECK EXT+RET	Deck extension and retraction are commanded the same time.	Check Wiring of the switches. If both Switches are closed remove both and repeat sequence activating only one Deck request.
226	226-JSTK OR	CAN message is out of range.	Replace the joystick.
227	227-CTRL ERR	Faulty controller.	Replace the controller.
229	229-CTRL ERR	Internal controller error.	Replace the controller.
230	230-CONTACT OPN	Contactor curcuit is open.	Check contactor connection and function. Check the harness to the contactor. If contactor not working, replace the contactor.

Code	Code String	Cause	Troubleshooting
231	231-CTRL ERR	Internal controller error.	Replace the controller.
232	232-CTRL ERR	Internal controller error.	Replace the controller.
233	233-CTRL ERR	Internal controller error.	Cycle the power. If still present, replace the controller.
234	234-COIL SHRT	M8: Right steering solenoid short a24	Check connection on right steering solenoid for short (wire 23A). Check condition of harness.
		M10: Left steering solenoid short a1	Check connection on left steering solenoid for short (wire 24A). Check condition of harness.
234	234-COIL SHRT	M4: Lift solenoid short a25	Check connection on lift solenoid for short (wire 14). Check condition of harness.
		S10: Base E Stop Light	Check connection on base e stop LED. Check condition of harness.
		M20: Beeper harness short a2	Check connection on beeper harness for short on lower control box. Check condition of harness
		S40: Horn connection short b21	Check connection on horn for short in lower control box. Check condition of harness.
		S20: Flashing light connection short b20	Check connection on flashing light for short. Check condition of harness.
235	235-CTRL ERR	Faulty controller.	Replace the controller.
236	236-CTRL ERR	Faulty controller.	Replace the controller.
237	237-CTRL ERR	Controller internal error.	Cycle the power. If still present, replace the controller.
238	238-CTRL ERR	Faulty controller.	Replace the controller.
239	239-SW/HW MISM	Hardware and software mismatch	Check hardware and software version. If good, replace the controller.
240	240-CTRL ERR	The controller cannot operate an output due to a damaged component or controller.	Check the following circuits for open, short, or damaged components: lift, lower, steer, base e-stop light, flashing light, horn and brake relay.

Code	Code String	Cause	Troubleshooting
241	241-COIL SHRT	*Main:* • Lift solenoid short A25. • Right steer solenoid short A24. • Left steer solenoid short A1. • Beeper harness short A2.	*Main:* • Check connection on lift solenoid for short (wire 14). Check condition of harness. • Check connection on right steer solenoid for short (wire 23A). Check condition of harness. • Check connection on left steer solenoid for short (wire 24A). Check condition of harness. • Check connection on beeper harness for short on lower control box (wire 29). Check condition of harness.
		Secondary: • Brake relay short B17. • Power on LED short B18. • Flashing lights connection short B20. • Horn connection short B21.	*Secondary:* • Check connection on brake relay 30 ACR (wire 17B) located in the emeregncy lowering PCB board. Check condition of harness. • Check connection on base E-stop LED (wire 60). Check condition of harness. • Check connection on flashing light for short (wire 22) Check condition of harness. • Check connection on horn for short in lower control box (wire 49A). Check condition of harness.
242	242-COIL OPN	Open circuit with 234 CTRL ERR (Refer 234 CTRL ERR Subcodes)	Check for open circuit (234 CTRL error) If good, replace the controller.
244	244-CHK SLAVE	Warning to check slave node for Errors.	Check Slave Node for Errors.
245	245-CTRL ERR	Incorrect motor installed.	Confirm motor part number.
246	246-CTRL ERR	Faulty controller.	Replace the controller.
248	248-CAN ERR	CAN ERR 03: Faulty joystick.	Replace the joystick.
		CAN ERR 04: Faulty joystick.	Replace the joystick.
		CAN ERR 20: Faulty joystick.	Replace the joystick.
		CAN ERR 21: Faulty joystick.	Replace the joystick.
		CAN ERR 22: Open CAN connection between joystick and base control box.	Check CAN connections from joystick to base control box.
		CAN ERR 23: Faulty joystick.	Replace the joystick.
		CAN ERR 24: Faulty joystick.	Replace the joystick.
249	249-CTRL ERR	Faulty controller.	Replace the controller.
250	250-CTRL ERR	Faulty controller (internal controller temperature sensor error).	Replace the controller.
251	251-CTRL ERR	Faulty controller (internal voltmeter is out of range).	Replace the controller.
253	253-TRAC SHORT	Short on phases U/V/W while driving.	Check connections at U/V/W. If good, replace controller. If not resolved, replace motor.
254	254-BRK SHORT-	Short on brake A28 or A30.	Check harness for short to ground. If good, replace the controller.

5.9-24 Set up a new Skycoded B controller

When a new Skycoded controller is installed, you must set up the machine type, region, battery type, and load calibration.

Button	Function
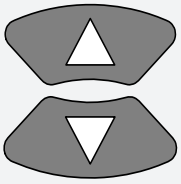	**UP and DOWN buttons** Select or scroll through through menus.
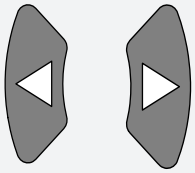	**LEFT and RIGHT buttons** Change settings and move through menus.
	**ENTER button** Select or save.

1. Park the MEWP on a firm level surface.

Unlock the controller

2. Pull out the base emergency stop button.
3. Turn the keyswitch to the base position.
4. Press ◎.
5. Enter the password 1275. Press ◎.

Machine setup:

6. Use the up and down arrows to scroll to **MACHINE SETUP**. Press ◎.
7. Use the left and right arrows to scroll to **MACHINE TYPE**. Press ◎.
8. Select the model of your MEWP.
9. Scroll to **REGION**. Press ◎.
10. Select the region of your MEWP. Note: the region is listed on the serial number plate of your MEWP.
11. Scroll to **BATT TYPE**. Press ◎.
12. Select the battery type installed in your machine. Refer to table *5.9-16 Machine setup menu table* for additional battery type details.
13. Scroll to **CALIBRATION**. Press ◎.
14. Scroll to **LOAD SENS CAL**. Press ◎.
15. Follow the flowcharts in *5.9-20 Load sense calibration - nominal weight menu* and *5.9-21 Load sense calibration - partial calibration menu* to do the loaded and partial platform calibration procedures.
16. After the load calibration is complete scroll to **CAL. TILT SENSOR**. Press ◎.
17. Follow the flowchart in *5.9-22 Calibrate internal tilt sensor menu* to calibrate the tilt sensor.

Save changes:

18. After the tilt calibration is complete scroll to **STORE DATA**. Press ◎.
19. **SAVE CHANGE?** Press ◎.
20. **SAVING PAR...**
21. **PARAM SAVED!**
22. Use the left arrow to return to the main menu.
23. Push and pull the base emergency stop button to cycle the power and save the changes.
24. The new controller setup is complete.

Skycoded B

5.10 Batteries

5.10-1 Battery maintenance

⚠ WARNING

Explosion hazard. Keep flames and sparks away. Do not smoke near the batteries. Battery acid releases explosive gas while charging. Charge the batteries in a well-ventilated area.

⚠ WARNING

Battery acid is extremely corrosive – wear proper eye and facial protection as well as appropriate protective clothing. If contact occurs, immediately flush with cold water and seek medical attention.

1. Turn the main power disconnect switch to the off position.
2. Check the battery case for damage.
3. Check the battery fluid level in each battery. If the plates are not covered by at least 13 mm (1/2”) of solution, add distilled or demineralized water.
4. Make sure all the battery connections are tight.

NOTE

Do not use any batteries other than the flooded lead-acid batteries of the proper Ah rating.

⚠ WARNING

Use the original or equivalent to the original parts and components for the MEWP.

5.11 Battery Charger

5.11-1 Charger operation

1. Park the MEWP near a power outlet.
2. Turn the main power disconnect switch to the OFF position.
3. Plug in the battery charger.
4. When charging is complete, unplug the charger before you turn the main power disconnect switch to the ON position.

IMPORTANT

Make sure the main power disconnect switch is in the OFF position when the battery charger is connected to power.

5.11-2 Charger maintenance

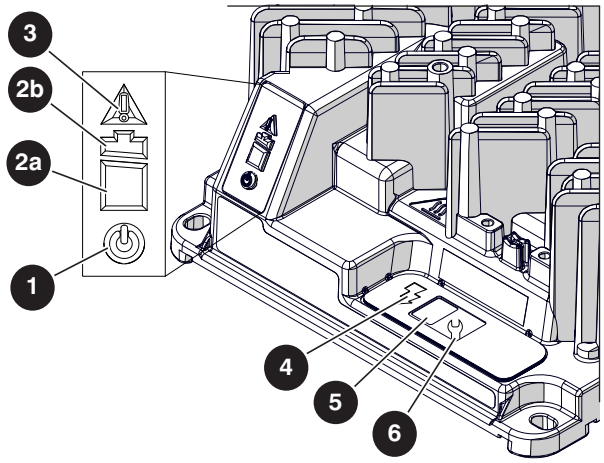

No.	Indicator type	State	Description/action required
1	*AC power*	Blue	Battery charger is connected to the AC power.
2a	*Battery charging <80%*	Flashing green	Low charge - continue charging.
		Solid green	High charge - continue charging.
2b	*Battery charging >80%*	Flashing green	High charge - can discontinue charging.
		Solid green	Charge complete - discontinue charging.
3	*Fault/ error*	Solid red	Charger faul - refer to the service manual.
		Flashing amber	Error encountered - refer to the service manual.
4	*Charging output*	Solid yellow	Charger output is active.
5	*Charge profile/ error display*	Current algorithm or fault/ error code	N/A
6	*Select charge profile*	Current charging algorithm	N/A

5.11-3 Charger profiles

IMPORTANT

Charger profiles differ depending on the battery type and manufacturer. Only use charger profiles with the batteries they were designed for. Using other incompatible batteries may cause poor charging performance and a decreased battery health.

1. Place the charger near a power outlet, but leave it unplugged.
2. Find your battery type in the following chart, and make a note of the profile number (starting with P).
3. Press and hold the **Select Charger Profile** button (wrench icon) on the Delta-Q charger. You will hear a small click when you press the button.
4. Continue to hold the **Select Charger Profile** button, and connect the charger to a power outlet.
5. Continue to hold the button for approximately 10 seconds or until the **Error Indicator** turns orange and the **Battery Charging Indicator** starts flashing green.
6. The current charger profile displays up to three times.

NOTE

The process times out and the profile remains unchanged if there are 15 seconds of inactivity, or if the charging profile is allowed to display three times.

7. Press and release the button to scroll through the charging profiles.
8. Select a profile, and press and hold the button for 10 seconds or until the **Error Indicator** and **Battery Charging Indicator** lights turn off.
9. Press the button again to confirm the selected profile.
10. Disconnect the charger from the power outlet.

Battery Brand	Compatible with	Profiles
U.S. Battery - US 2200 XC/XC2 Flooded, 6V, 232 Ah	200 - 255 Ah flooded	#11 (P-0-1-1)
Discover Energy - EVGC6A-A AGM, 6V, 220 Ah	220 - 400 Ah AGM	#43 (P-0-4-3)
Discover Energy - EV12A-A AGM, 12V, 140 Ah*		
U.S. Battery - US 12V XC2 Flooded, 12V, 155 Ah*	330 - 425 Ah flooded	#71 (P-0-7-1)
U.S. Battery - US 250 XC/XC2 Flooded-lead, 6V, 255 Ah	330 - 425 Ah flooded	#73 (P-0-7-3)
Trojan - T105 ELPT Flooded, 6V, 225 Ah	150 - 250 Ah 6V, 8V, 12V flooded	#3 (P-0-0-3)

*The batteries used for these charger profiles are connected in a series-parallel circuit.
Delta-Q IC-650 Charger Profiles

5.11-4 Charger connector

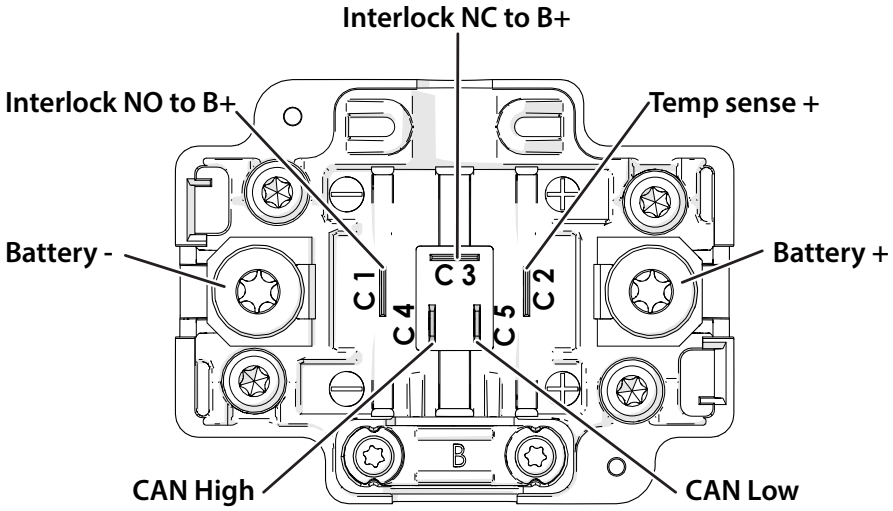

5.11-5 Charger troubleshooting

The IC Series charger is continuously monitoring itse

Symptom	Recommended Action
No Indicator Lights	Check AC voltage and connection to wall power.
Only Blue AC Light On	Charger is connected to AC and is waiting for a battery to be connected, or for CAN remote control commands. Battery voltage must rise over 0.1V/cell before charging will begin. Some charging algorithms require a higher battery voltage to begin.
Solid Red Fault/Error Indicator	Read fault code (e.g., F-0-0-1) number on the Charge Algorithm/Error Display and refer to the fault code table.
Flashing Amber Fault/Error Indicator	Read error code (e.g., E-0-0-1) number on the Charge Algorithm/Error Display and refer to the error code table.

If and its environment for unusual conditions. There are a few indications that may require the attention of the user.

5.11-6 Charger fault codes

Fault Code	Description	Troubleshooting/Customer Actions
F-0-0-1	DC-DC Failure: LLC excessive leakage fault.	Internal charger fault. Disconnect AC and battery from charger for a minimum of 30 seconds. If it fails again, contact Skyjack service.
F-0-0-2	Power Factor Correction (PFC) Failure: PFC excessive leakage fault.	
F-0-0-3	PFC has taken too long to boost.	
F-0-0-4	The charger has been unable to calibrate the current offset.	
F-0-0-5	The voltage drop across the DC relay is too high while the relay is closed.	
F-0-0-6	Large difference between internal DC-DC and battery sense currents.	

5.11-7 Charger error codes

Fault Code	Description	Troubleshooting/Customer Actions
E-0-0-1	Battery voltage over limit in software. Typically 2.5V/cell. At the start of a charger cycle only and only for lead acid batteries. It is acceptable for the voltage to go above this during charging and when charging Lithium batteries.	■ Check the battery voltage and cable connections. ■ Check charger voltage model is appropriate for batteries. ■ This error automatically clears once the condition has been corrected.
E-0-0-2	Battery voltage too low to start a charge cycle. Algorithm dependent. Typically 0.1V/cell.	■ Check the battery voltage and cable connections. ■ Check the charger is the correct voltage for the batteries it is connected to. ■ Check battery size and condition. Batteries may be overdischarged. Use another charger to bring the batteries above the minimum voltage. ■ This error automatically clears once the condition has been corrected.
E-0-0-3	Charge time limit reached. Algorithm dependent.	■ Charger output reduced due to high temperatures. Operate at lower ambient temperature. ■ Charger output reduced due to low AC voltages. Check AC voltages. ■ Check for shorted or damaged cells. ■ Poor battery health. Replace the battery. ■ Batteries too large for the charger. Replace batteries. ■ Very deeply discharged battery. Retry charge. ■ Battery connections are loose or corroded. Check connections. ■ Extra loads. Turn off other devices running on the battery ■ This error automatically clears once the charger is reset by cycling DC or by loss of AC for over 10 minutes.
E-0-0-4	Battery could not be trickle charged up to the minimumvoltage. May also be used for other battery-related errors depending on the algorithm.	■ Check for shorted or damaged cells. ■ Poor battery health. Replace the battery. ■ Check DC connections. ■ May be caused because of output reduced due to high temperature. ■ Some new batteries may trigger these alarms as there voltage dips ■ when charging starts before it goes onto rise.
E-0-0-7	Charge amp-hour Limit reached. Algorithm dependent.	■ Charger output reduced due to high temperatures. Operate at lower ambient temperature ■ Charger output reduced due to low AC voltages. Check AC voltage. ■ Check for shorted or damaged cells. ■ Poor battery health. Replace the battery. ■ Very deeply discharged battery. Retry charge. ■ Battery connections are loose or corroded. Check connections. ■ Extra loads. Turn off other devices running on the battery ■ This error automatically clears once the charger is reset by cycling ■ DC or by loss of AC for over 10 minutes.

E-0-0-8	Battery temperature out of range. Algorithm dependent.	■ Cool or warm batteries as needed. ■ Check temperature sensor and connections. ■ This error automatically clears once the condition has been corrected.
E-0-1-1	Charge disabled by external command	■ Charger has been disabled by an external controller over the CANbus network. ■ This error automatically clears once the command has been removed.
E-0-1-2	Reverse polarity	■ Battery is connected the wrong way around. Check the battery connections. ■ This error automatically clears once the condition has been corrected.
E-0-1-3	Battery does not take current	■ Check for an electrical component or loose connection between the charger and the battery. ■ When charging lithium batteries, make sure the charger is properly connected to the battery and battery management system. ■ This error automatically clears once the charger is disconnecting DC or AC.
E-0-1-9	Hardware build does not support software version	■ The charger hardware does not support the new software version. ■ Existing SW is left running. Contact Delta-Q Technologies.
E-0-2-0	No active algorithm selected	■ Reprogram the charger with its original software, algorithms, and settings. ■ Use the wrench button to select the correct algorithm if still available on the charger. ■ The problem clears automatically when an available algorithm is set on the charger, as default.
E-0-2-1	High battery voltage while charging. Algorithm dependent. Typically 2.8V/cell.	■ When already charged, some new batteries may exhibit this error. ■ Disconnect the battery connection and wait for the battery voltage to fall. Reconnect the batteries to see if the condition reoccurs. ■ Check battery size and condition. Batteries in poor condition, with a high internal resistance, may cause this error. New batteries, if charged when already full, may also cause this error. Disconnect and reconnect the batteries a few times. ■ Check the battery voltage and cable connections. ■ This error automatically clears once the condition has been corrected.

E-0-2-2	Low battery voltage while charging. Algorithm dependent. Typically 0.1V/cell.	■ Another device may be drawing current from the battery. ■ Check the battery voltage and cable connections. ■ Check battery size and condition. Batteries may be overdischarged. ■ Use another charger to bring the batteries above the minimum voltage. ■ This error automatically clears once the condition has been corrected.
E-0-2-3	High AC voltage error (>270 VAC)	■ AC voltage is too high. Connect charger to an AC source that has a stable AC voltage between 85 and 270 VAC/45-65 Hz. ■ In newer software versions this does not prevent charging. ■ This error will automatically clear once the condition has been corrected.
E-0-2-4	Charger failed to turn on properly	■ Disconnect AC input and battery for 30 seconds. If the error persists, contact Delta-Q Technologies.
E-0-2-5	AC voltage has dipped below 80 VAC 3 times in 30 seconds	■ AC source is unstable. This could be caused by an undersized generator and/or input cables that are too long or too small. ■ Connect the charger to an AC source with a stable AC voltage between 85 and 270 VAC/45-65 Hz. ■ This error will automatically clear once the condition has been corrected.
E-0-2-8	Attempt to select algorithm incompatible with this software	■ Update charger software, continue to use existing algorithm* or select a different charging algorithm that is compatible. *** Notes** ■ If selecting a different algorithm, the existing algorithm will remain in the charger. ■ If upgrading an existing algorithm, the existing algorithm will be deleted. Contact Delta-Q Technologies for a software upgrade to run the new algorithm.
E-0-2-9	Cannot transmit on CAN bus	■ Check the physical CAN connector, electrical bus conditions, and other CAN modules for correct functioning. For example, check that termination resistance is approximately 60 ohms.
E-0-3-0	CAN heartbeat timeout on Battery module	■ May be caused by a missing heartbeat message. Check the CAN bus battery module for correct function. ■ This error automatically clears once the condition has been corrected.
E-0-3-1	The Vref for the ADC measurements has triggered an alarm	■ Internal charger error. Disconnect AC and the battery for a minimum of 30 seconds and retry. ■ If the problem persists, contact Delta-Q Technologies. ■ This error automatically clears once the condition has been corrected.

E-0-3-2	CAN Heartbeat Lost	■ An error was detected with the CAN heartbeat communications with a registered node being guarded. ■ Check the networked CANbus device(s) for correct functioning. ■ This alarm does not display or get logged on the charger but does appear on the CAN bus via an emergency message.
E-0-3-6	Battery temperature sensor is missing or shorted	■ Check sensor connections. ■ The charger behavior when this fault occurs can be configured. OEMs may contact Delta-Q Technologies for more information. ■ This error automatically clears once the condition has been corrected.
E-0-3-8	Fan will not turn	(Fan-equipped models only) ■ Check fan connections. ■ Check to make sure the fan turns freely and is not obstructed. ■ This error automatically clears once the condition has been corrected.
E-0-3-9	The button is stuck down	■ Inspect for damage or objects on or near the button.
E-0-4-0	Fan voltage pulled low	(Fan-equipped models only) ■ Check to make sure the fan turns freely.
E-0-4-5	Battery disconnected	■ Battery disconnected ■ Reconnect the battery or check the wiring
E-0-4-6	Invalid PDO Length	■ Check to make sure all PDOs are valid length. ■ This error automatically clears once the condition has been corrected
E-0-4-7	Platform overvoltage alarm	■ A battery or some other source has been connected to the charger that exceeds the hardware's design limits.

5.12 Wheels

Tools needed

- Adjustable torque wrench 203 Nm (150 ft-lb)
- 1-7/16” deep socket and wrench
- Hub puller

5.12-1 Remove the front wheel

1. Use an appropriately rated lifting device to raise the MEWP until the wheels are off the ground. Set the MEWP on stands which are adequately rated to support the weight of the machine.
2. Remove and discard the cotter pin.
3. Remove and set aside the castle nut.

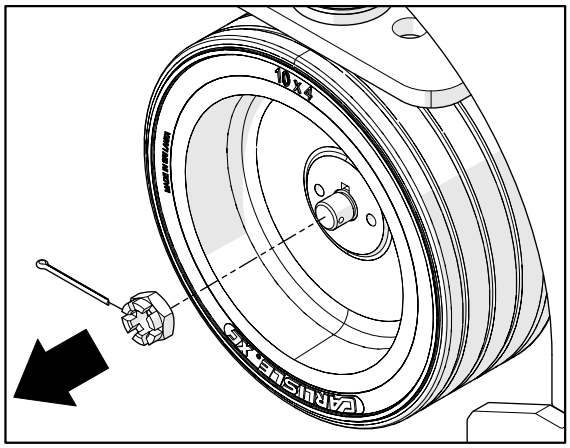

4. Use two long 3/8”-16 bolts with a hub puller to remove the wheel from the wheel motor.

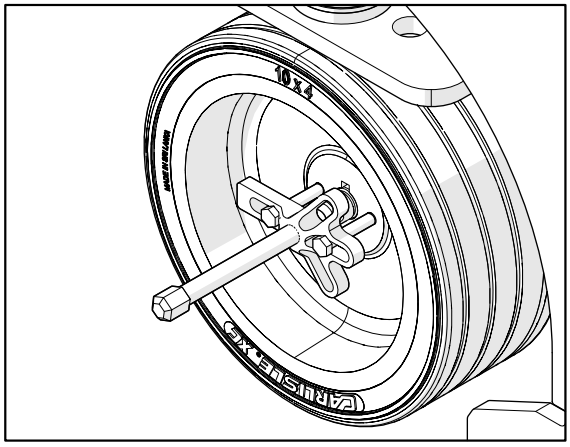

5.12-2 Install the front wheel

1. Make sure the key is in the spindle.
2. Line up the keyway in the the wheel with the key in the spindle.Put the wheel on the spindle.

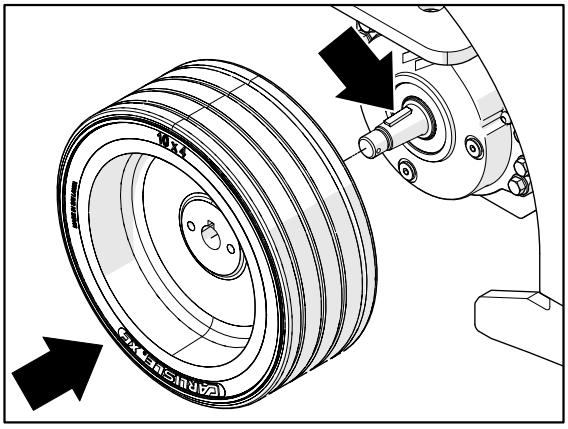

3. Install the castle nut. Tighten the nut with your fingers.
4. Torque the castle nut to 95 Nm (70 ft-lb).

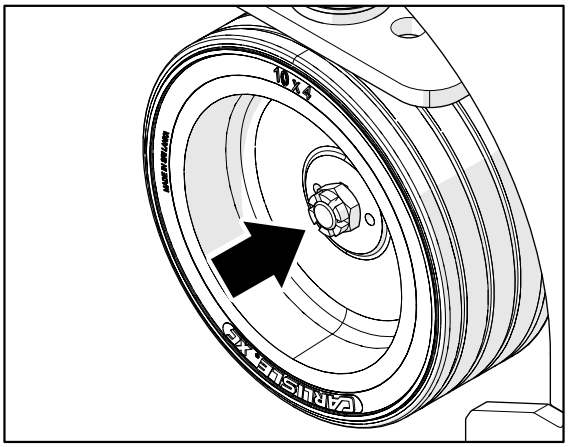

5. Check if the holes in the spindle and the slots in the castle nut are aligned.If they are not, continue to torque the nut until they are aligned.

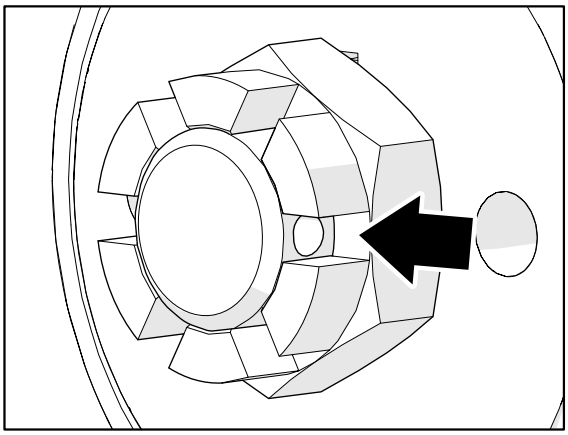

6. Insert a 1/8” x 2” cotter pin through the holes in the spindle, with the long arm of the cotter pin on the outside.Push the cotter pin in all the way.
7. Bend the long end of the cotter pin over the end of the spindle to secure the castle nut.

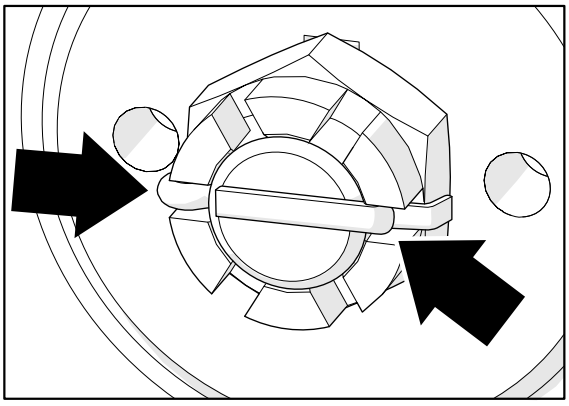

8. To limit rust bleed, apply a few drops of grease to the two small tapped holes in the wheel.

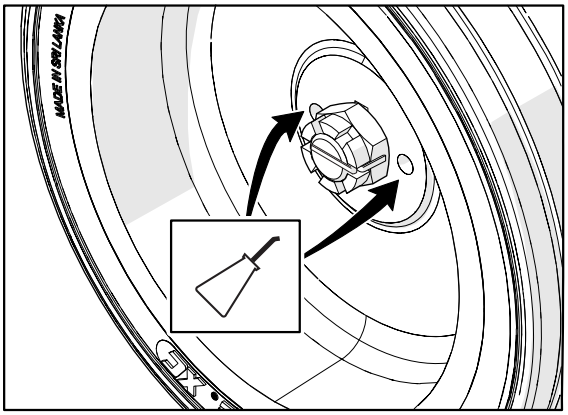

5.12-3 Remove the rear wheel

1. Use an appropriately rated lifting device to raise the MEWP until the wheels are off the ground. Set the MEWP on stands which are adequately rated to support the weight of the machine.
2. Remove and set aside the dust cap.
3. Remove and discard the cotter pin.
4. Remove and set aside the flast washer and the castle nut.

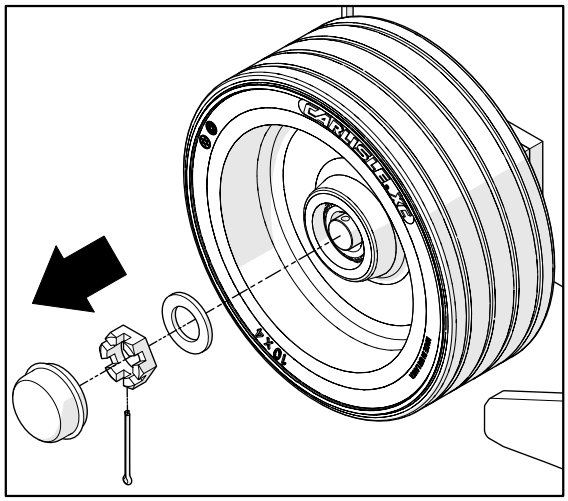

5. Remove the wheel from the spindle.

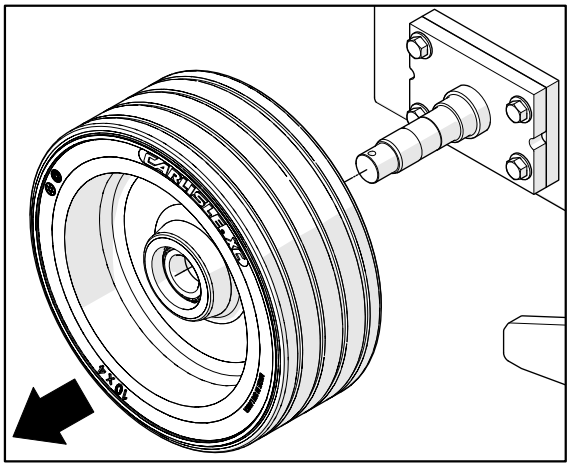

6. From the rear side of the wheel, put the grease seal on the hub with the tapered end pointing in.

5.12-4 Prepare the new rear wheel

If the bearings are provided separately, start with step 1.
If the bearings are pre-installed, start with step 4.

1. Use solvent to clean the bearings.Let them dry.
2. Completely coat the inner and outer bearings with grease. Be careful not to contaminate the grease as this can cause internal damage and decrease the life span of the bearings.

Recommended Grease Type
STARPLEX EP2
UNIREX EP2
SHELL GADUS S2

3. Install the inner and outer bearings in the bearing cups with the tapered ends pointing in.

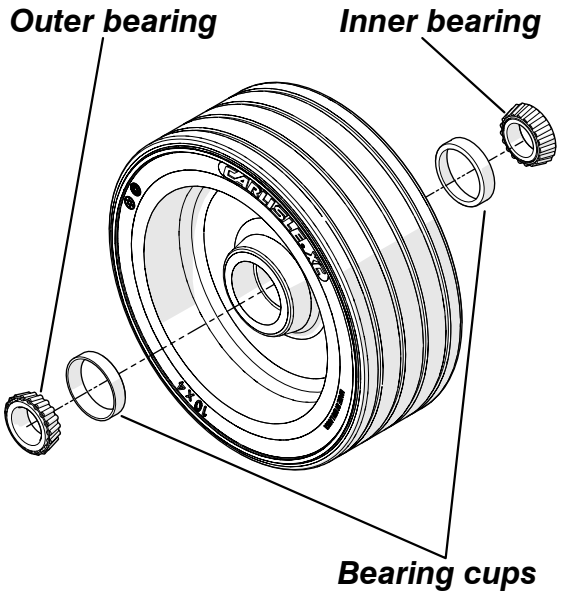

4. From the rear side of the wheel, put the grease seal on the hub with the tapered end pointing in.

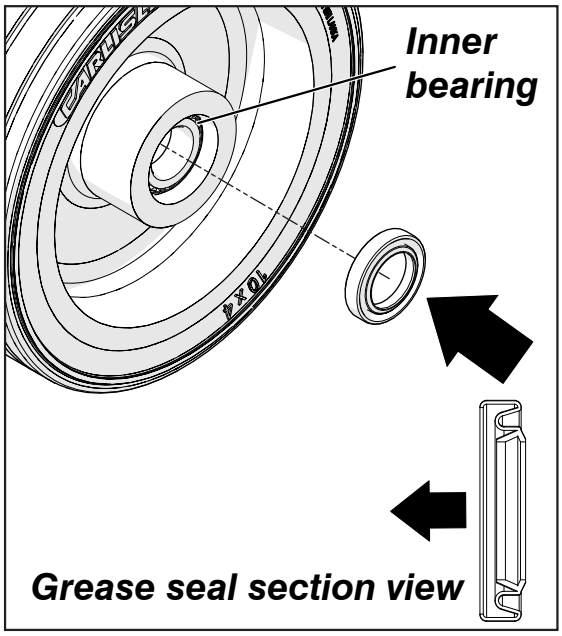

5. Put a flat piece of wood over the grease seal to protect it.Then use a hammer to lightly tap the seal into place.

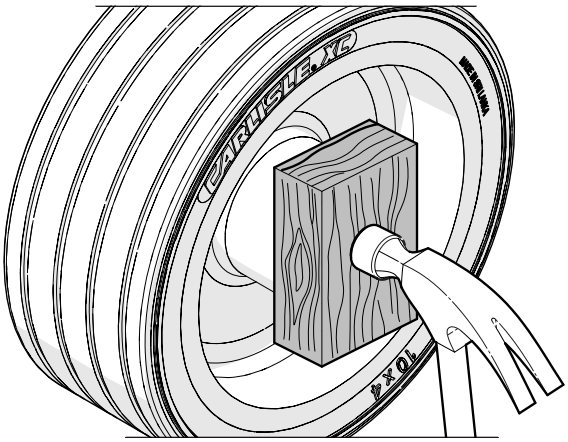

5.12-5 Install the rear wheel

1. Put the wheel onto the rear spindle.
2. Install the flat washer and castle nut. Tighten the nut with your fingers.

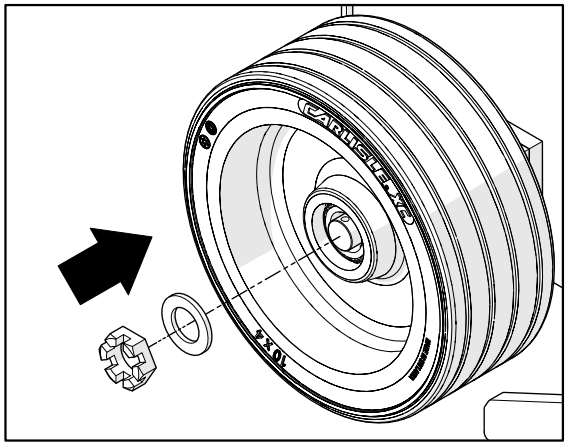

3. Rotate the wheel slowly while tightening the castle nut to approximately 68 Nm (50 ft-lb). This seats the bearings in the wheel.

IMPORTANT

Do not over-torque the castle nut as this could reduce the bearing life.

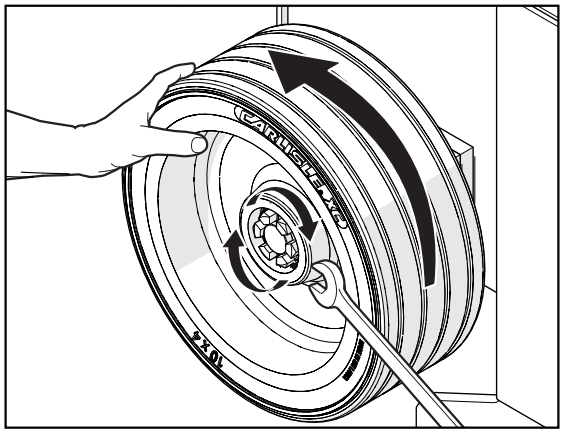

4. Use a socket wrench to loosen the castle nut to remove the torque. Do not let the wheel rotate when you loosen the nut.
5. Tighten the castle nut by hand.

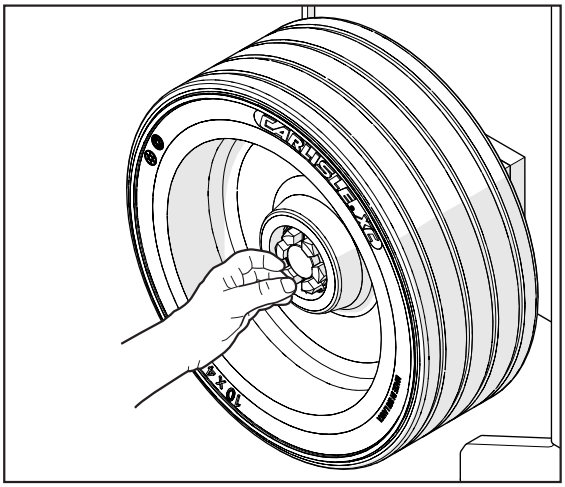

6. Check if the hole in the spindle and the slot in the castle nut are aligned.If they are not, loosen the nut by hand until they are aligned.Make sure the wheel rotates freely.

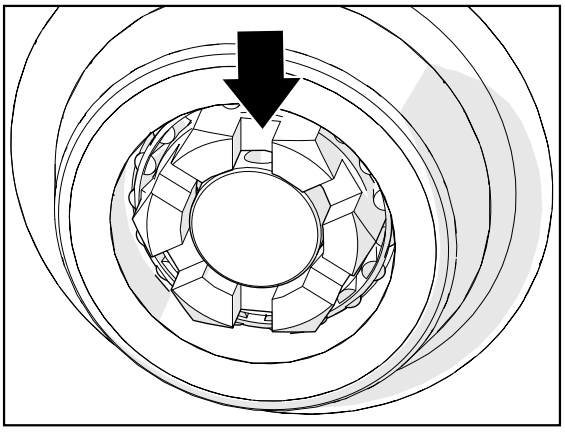

7. Insert a 3/16” x 1-1/2” cotter pin through the holes in the spindle, with the long arm of the cotter pin on the outside.Push the cotter pin in all the way.
8. Bend the long end of the cotter pin over the end of the spindle to secure the castle nut.

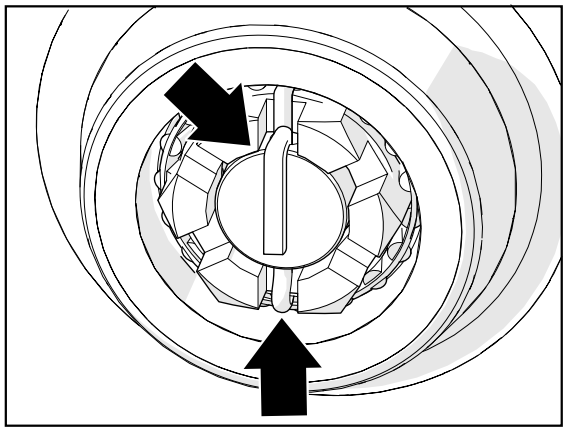

9. Install the dust cap over the castle nut. Be sure not to damage the castle nut when you install the dust cap.

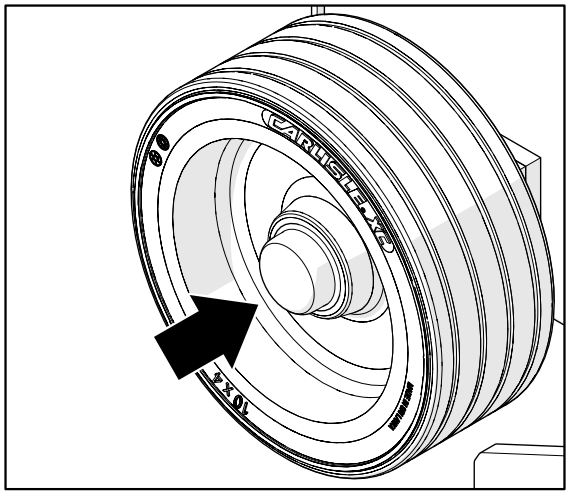

5.12-6 Do a test of the wheel motor temperature sensor

1. Test between pins 3 and 4 of the connector. It should read 1000 ohms (1k).

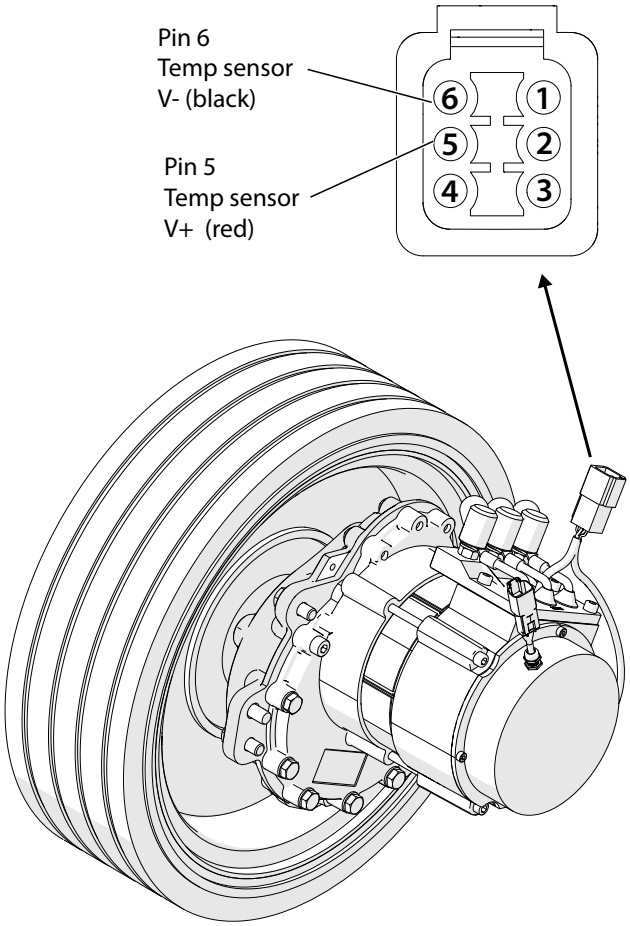

5.12-7 Do a test of the wheel motor

1. With the power off test between:
   - U and B -
   - V and B -
   - W and B -
2. All should read approximately 9.05 K ohms, and should all be equal. This is the most important part.
3. If any read short to B -, remove all three cables (U, V, and W) and test on the motor controller between:
   - U and B -
   - V and B -
   - W and B -
4. These should read between 20 K and 35 K ohms approximately, but should all be equal.
5. If you still read a short to B-, replace the controller.
6. If they all now read correctly, replace the motor.

NOTE

When testing on the motor you should see an open circuit between U and the motor body, V and the motor body, and W and the motor body

When testing between any of the 3 terminals on the motor (U, V, W) you should see a closed circuit

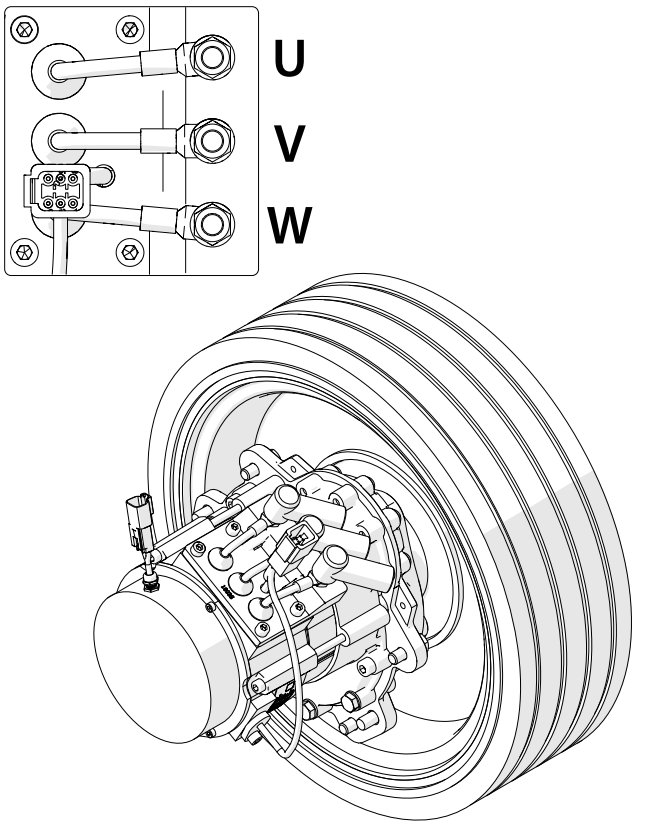

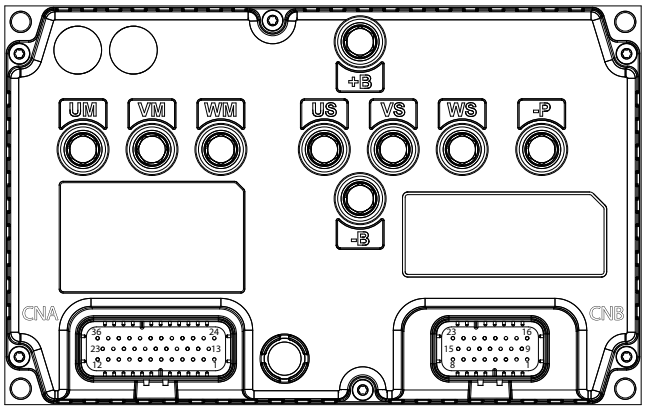

Connector A **Connector B**

SKYJACK™

www.skyjack.com