SKYJACK

SERVICE MANUAL

SJ8831 RT, SJ8841 RT

ROUGH TERRAIN SCISSORS

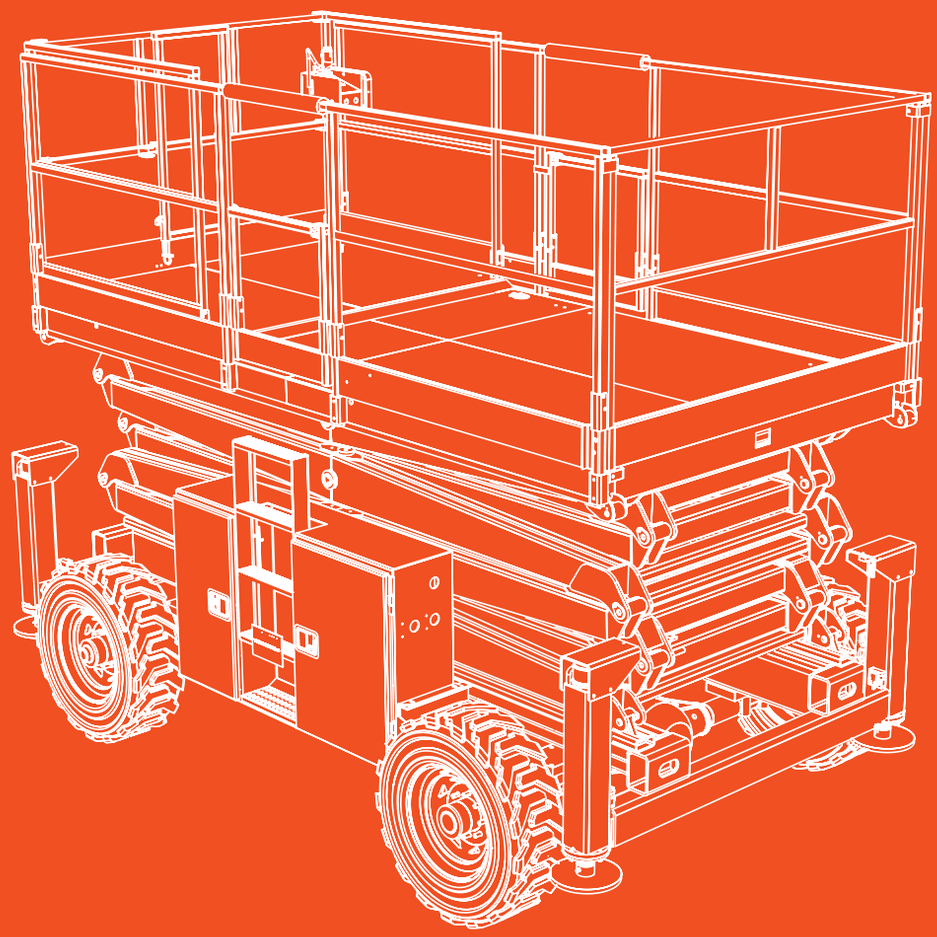

163762AIA
March 31 2025
ANSI/CSA

This manual is for MEWPs with serial numbers:

SJ8831 RT: 36 000 276 - 36 999 999
SJ8841 RT: 40 001 135 - 40 999 999

Please refer to the website (www.skyjack.com) for contact information, other serial numbers, the most recent technical manuals, animations, and USB software.

The original instructions are in English.

THIS SAFETY ALERT SYMBOL MEANS ATTENTION!



BECOME ALERT! YOUR SAFETY IS INVOLVED.

The Safety Alert Symbol identifies important safety messages on MEWPs, safety signs in manuals or elsewhere. When you see this symbol, be alert to the possibility of personal injury or death. Follow the instructions in the safety message.

⚠ DANGER

DANGER indicates an imminently hazardous situation which, if not avoided, will result in death or serious injury.

⚠ WARNING

WARNING indicates a potentially hazardous situation which, if not avoided, could result in death or serious injury.

⚠ CAUTION

CAUTION indicates a potentially hazardous situation which, if not avoided, may result in minor or moderate injury. It may also be used to alert against unsafe practices.

IMPORTANT

IMPORTANT indicates a procedure essential for safe operation and which, if not followed, may result in a malfunction or damage to the MEWP.

Notes

Table of Contents

Section 1 – Scheduled Maintenance 11

1.1 Read and Heed 11

1.1-1 Aerial Platform and Mobile Elevating Work Platform (MEWP) Definition. 11

1.1-2 Purpose of Equipment 11

1.1-3 Use of Equipment 11

1.1-4 Manual 11

1.1-5 Service Policy and Warranty 11

1.1-6 Operator Safety Reminders, Warnings and Precautions. 11

1.2 Maintenance and Inspection Schedule 12

1.2-1 Owner's Annual Inspection Record 12

1.2-2 Replacement Parts 12

1.2-3 Maintenance and Service Safety Tips. 12

1.3 Hydraulic System & Component Maintenance and Repair 13

1.3-1 Maintenance Hints 13

1.4 Scheduled Maintenance 14

1.4-1 Service Bulletins 14

1.4-2 Maintenance and Inspection 14

1.4-3 Maintenance Instructions 14

1.5 Owner's Annual Inspection Record 15

1.6 Scheduled Maintenance Inspections 17

1.6-1 Electrical 17

1.6-2 Hydraulic 17

1.6-3 Manuals (B). 17

1.6-4 Labels (B) 18

1.6-5 Limit Switches (B) 18

1.6-7 Emergency Lowering Access Rod (B)(Model 9241) 18

1.6-8 Electrical and Hydraulic Compartment 18

1.6-9 Fuel and Hydraulic Compartment 20

1.6-10 Engine Compartment 21

1.6-11 Platform Assembly 23

1.6-12 Lifting Mechanism. 24

1.6-13 Base 27

1.6-15 Function Tests 29

Section 2 – Maintenance Tables and Diagrams 31

2.1 Specifications and Features 32

2.2 Maximum Platform Capacities (Evenly Distributed) 33

2.3 Floor Loading Pressure. 34

2.4 Tire Specifications 36
2.5 Fluids 37
2.6 Torque Specifications 38
2.7 Torque Specifications for Fasteners (Imperial) 39
2.8 Torque Specifications for Fasteners (Metric) 40
2.9 Torque Specifications for Hydraulic Couplings and Hoses 41

Section 3 – System Component Identification and Schematics 43
3.1 Electrical Symbol Chart 44
3.2 Hydraulic Symbol Chart 45
3.3 AC Cord Color Code 46
3.4 Hydraulic Parts List 47
3.5 Electrical Parts List 49
3.6 Platform Control Console Diagram with All Options (ANSI/CSA) 54
3.7 Control Cable Assemblies Diagram 55
3.8 Outrigger/Hydraulic Generator Control Console Wiring 56
3.9 Hydraulic Schematic 57
3.10 Main Manifold Components and Port Identifications 58
3.11 Hydraulic Manifold Components and Port Identifications 59
3.12 Main Manifold Wiring Diagram (ANSI/CSA) 60
3.13 Horn, Light, Beeper Wiring Diagram (ANSI/CSA) 61
3.14 Powered Extension Platform - Electrical Connection Diagram 62
3.15 Electrical Panel Diagram - 12 kW Generator Modification (ANSI/CSA) 63
3.16 12 kW Generator Hydraulic and Electric Wiring Schematics (ANSI/CSA) 64
3.17 Electrical Panel Diagram – Outrigger Option 65
3.18 Engine Interface Harness Wiring Diagram – Kubota Dual Fuel Engine (DF972 EFI) 66
3.19 Engine Interface Harness Schematic - Kubota DF 972 67
3.20 Engine Interface Electrical Schematic – Kubota Dual Fuel Engine (DF972 EFI) 68
3.21 Telematics Harness Wiring Diagram 69
3.22 Flashing Light Relay Harness 70
3.23 Engine Harness Wiring Diagram – Kubota Diesel Engine 71
3.24 Engine Harness Wiring Diagram – Kubota Dual Fuel Engine 72
3.25 Electrical Panel Diagram (ANSI/CSA) 73
3.26 Electrical Panel Diagram (ANSI/CSA) 74
3.27 Electrical Panel Diagram with Positive Air Shutoff Option 75
3.28 Electrical Panel Diagram with Positive Air Shutoff Option 76
3.29 Positive Air Shutoff Harness Wiring Diagram – Diesel Engine 77
3.30 Electrical Schematic – Dual Fuel – No Options (ANSI/CSA) 78
3.31 Electrical Schematic – Dual Fuel – No Options (ANSI/CSA) 79
3.32 Electrical Schematic – Dual Fuel – No Options (ANSI/CSA) 80
3.33 Electrical Schematic – Dual Fuel – All Options (ANSI/CSA) 81
3.34 Electrical Schematic – Dual Fuel – All Options (ANSI/CSA) 82
3.35 Electrical Schematic – Dual Fuel – All Options (ANSI/CSA) 83

3.36 Electrical Schematic – Diesel – All Options (ANSI/CSA) 84
3.37 Electrical Schematic – Diesel – All Options (ANSI/CSA) 85
3.38 Outrigger Wiring Diagram 86
3.39 Electrical Panel Diagram – Oil Cooler Option 87
3.40 Hydraulic Generator Electrical Panel Diagram – Kubota Engine (ANSI/CSA) 88

Section 4 – Troubleshooting Information 89
4.1 Introduction 89
4.2 Electrical System 90
4.2-1 All Controls Inoperative 90
4.2-2 No Power to Platform (ANSI/CSA) 90
4.2-3 All Functions Inoperative from Platform 91
4.2-4 Engine Does Not Crank from Platform 91
4.2-5 Engine Does Not Crank from Base Controls (Kubota diesel) 92
4.2-6 Engine Cranks but Stops Cranking after a few seconds 92
4.2-7 Glow Plugs Inoperative from Engine Controls 92
4.2-8 Glow Plugs Inoperative from Platform (Additional) 92
4.2-9 Engine Cranks but Does Not Start (Kubota diesel) 93
4.2-10 High Throttle Inoperative 93
4.2-11 Drive and Steer Inoperative (Machines without outriggers option) 94
4.2-12 Drive and Steer Inoperative (machines with outriggers option) 94
4.2-13 Brakes Do Not Release 95
4.2-14 Steer Right Inoperative 96
4.2-15 Steer Left Inoperative 96
4.2-16 Reverse Drive Inoperative 97
4.2-17 Forward Drive Inoperative 98
4.2-18 First Drive Speed and Steering Inoperative 98
4.2-19 Second Drive Speed Inoperative 98
4.2-20 Third Drive Speed Inoperative 100
4.2-21 High/Low Range Speed Inoperative 100
4.2-22 Up Circuit Inoperative from Platform or Base (machines without outriggers) 101
4.2-23 Up Circuit Inoperative from Base 102
4.2-24 Platform Does Not Lift from Platform or Base Controls with Outriggers Retracted (Lift Operates Correctly with Outriggers Extended) 102
4.2-25 Platform Does Not Lift from Platform or Base Controls with Outriggers Extended 103
4.2-26 Down Circuit Inoperative from Platform or Base 104
4.2-27 Down Circuit Inoperative from Base 105
4.2-28 Powered Extension Platform Inoperative 105
4.2-29 Powered Extension Platform Does Not Extend 106
4.2-30 Powered Extension Platform Does Not Retract 106
4.2-31 Hydraulic Generator Inoperative 107
4.2-32 Hydraulic Generator Does Not Shut Off from Generator Switch 107
4.2-33 All Outriggers Inoperative (Auto-level and manual) 108

4.2-34 All Outriggers Inoperative (Auto-level and manual from platform controls) 108
4.2-35 All Outriggers Inoperative (Base controls) 109
4.2-36 All Outriggers Inoperative (Auto-level)
A: Led Power Indicator Light at Outrigger Control Module (OCM1) Not on Constant . . 109
4.2-37 All Outriggers Inoperative (Auto Level Only)
B: Led Power Indicator Light at Outrigger Control Module (OCM1) Flashing 110
4.2-38 Left Front Outrigger Inoperative Manually 111
4.2-39 Right Front Outrigger Inoperative Manually 111
4.2-40 Right Rear Outriggers Inoperative Manually 111
4.2-41 Left Rear Outriggers Inoperative Manually 112
4.2-42 Individual Outrigger Functions Inoperative (auto-level) 112
4.2-43 Auto-level Inoperative 112
4.2-44 Auto All Up Inoperative (Retract) 113
4.3 Hydraulic System 114
4.3-1 All Functions Inoperative 114
4.3-2 Steering Inoperative 114
4.3-3 Steer and First Drive Speed Inoperative 114
4.3-4 Lift and Second Drive Speed Inoperative 114
4.3-5 Drive Inoperative 114
4.3-6 Reverse Drive Inoperative 115
4.3-7 Forward Drive Inoperative 115
4.3-8 Brakes Do Not Release 115
4.3-9 Up Circuit Inoperative 115
4.3-10 Down Circuit Inoperative 116
4.3-11 Powered Extension Platform Inoperative 116
4.3-12 Hydraulic Generator Inoperative 116
4.3-13 All Outriggers Inoperative 116
4.3-14 Left Front Outrigger Inoperative 116
4.3-15 Right Front Outrigger Inoperative 117
4.3-16 Right Rear Outrigger Inoperative 117
4.3-17 Left Rear Outrigger Inoperative 117
4.3-18 Outriggers Drift In 117

Section 5 – Procedures 119
5.1 General 119
5.1-1 Safety and workmanship 119
5.2 Platform 120
5.2-1 Adjust the gate spring hinge 120
5.3 Scissors 120
5.3-1 Replace and adjust the end of stroke limit switch (LS4) 120
5.3-2 Replace and adjust the high speed cutout limit switch (LS5) 122
5.4 Engines 124
5.4-1 Kubota dual fuel (DF972) resistance checks 124

5.4-2 Kubota dual fuel (DF972) engine throttle setting . . . 125
5.4-3 Kubota diesel (D1305) engine throttle setting . . . 126
5.4-4 Replace the fuel filter element (Kubota D1305) . . . 128
5.4-5 Bleed the fuel system of air (Kubota D1305) . . . 128
5.4-6 Replace and adjust the fan belt . . . 129
5.4-7 Replace the air cleaner element . . . 130
5.4-8 Replace the oil filter cartridge . . . 130
5.4-9 Change the oil . . . 131
5.4-10 Check and replenish the radiator coolant level . . . 132
5.4-11 Drain and refill the radiator . . . 132
5.4-12 Engine Parameter Display . . . 133
5.5 Base . . . 140
5.5-1 Inspect and torque the wheel bolts and nuts . . . 140
5.5-2 Install and torque the wheels . . . 140
5.5-3 Grease points . . . 141
5.5-4 Reconnecting the platform control box for use from the ground . . . 142
5.5-5 Electronic tilt switch setup procedure . . . 143
5.5-6 Adjust the brake caliper . . . 146
5.5-7 Bleed the brake caliper . . . 148
5.5-8 Front axle hub procedure . . . 150
5.6 Hydraulics . . . 152
5.6-1 Tightening and torque recommendations for hydraulic couplings and hoses . . . 152
5.6-2 Check the holding valve . . . 153
5.6-3 Change the hydraulic oil . . . 154
5.6-4 Set the system pressure . . . 155
5.6-5 Set the lift pressure . . . 156
5.7 Outriggers . . . 158
5.7-1 Outrigger mechanical limit switch wiring diagram . . . 158
5.7-2 Replace and adjust the outrigger upper limit switch (LS61, LS62, LS63, LS64) . . . 159
5.7-3 Replace and adjust the outrigger lower limit switch (LS65, LS66, LS67, LS68) . . . 160
5.8 Control Modules Identification and Locations . . . 161
5.8-1 Identification . . . 161
5.9 EZcal Diagnostic Tool . . . 162
5.9-1 Hand held EZcal calibration and diagnostic tool key functions . . . 162
5.9-2 Flash the controller . . . 163
5.9-3 Outrigger codes . . . 164
5.10 Auto-leveling Outrigger PC Board Layout . . . 165
5.11 GP-106 (OCM1) Control Module . . . 166
5.11-1 Outrigger control module (GP-106/OCM1) instructions . . . 166
5.11-2 Auto-leveling outrigger setting and error codes . . . 168
5.11-3 Auto-leveling outrigger error code breakdown . . . 169
5.11-4 Set up the GP-106 outrigger controller . . . 170
5.11-5 GP-106 Outrigger controller pin reference table . . . 171

5.12 GP-108 Control Module 172
5.12-1 Set up the GP-108 outrigger controller 172
5.12-2 GP-108 Outrigger controller pin reference table 174
5.12-3 GP-108 LED error codes 176

Section 1 – Scheduled Maintenance

1.1 Read and Heed

SKYJACK is continuously improving and expanding product features on its equipment, therefore, specifications and dimensions are subject to change without notice.

1.1-1 Aerial Platform and Mobile Elevating Work Platform (MEWP) Definition

A mobile device that has a positionable platform supported from ground level by a structure.

1.1-2 Purpose of Equipment

The SKYJACK SJ DC Electric Series MEWPs are designed to transport and raise personnel, tools and materials to overhead work areas.

1.1-3 Use of Equipment

The MEWP is a highly maneuverable, mobile work station. Work platform elevation and elevated driving must only be done on a firm, level surface.

1.1-4 Manual

Operating Manual: The operating manual is considered a fundamental part of the aerial platform. It is a very important way to communicate necessary safety information to users and operators. A complete and legible copy of this manual must be kept in the provided weather-resistant storage compartment on the aerial platform at all times.

Service & Maintenance: The purpose of this is to provide the customer with the servicing and maintenance procedures essential for the promotion of proper machine operation for its intended purpose.

All information in this manual should be read and understood before any attempt is made to service the machine. The updated copy of the manuals are found on the company's website: *www.skyjack.com*.

1.1-5 Service Policy and Warranty

SKYJACK warrants each new product to be free of defective parts and workmanship for the first 2 years or 3000 hours, whichever occurs first. Any defective part will be replaced or repaired by your local SKYJACK dealer at no charge for parts or labor. In addition, all products have a 5 year structural warranty. Contact the SKYJACK Service Department for warranty statement extensions or exclusions.

1.1-6 Operator Safety Reminders, Warnings and Precautions

Operator safety is SKYJACK's priority. The operator should comply with all applicable safety-related reminders, warnings and precautions found in the Operating Manual. They should be read and understood completely before operating the aerial platform.

1.2 Maintenance and Inspection Schedule

The actual operating environment of the work platform governs the use of the maintenance schedule. The inspection points covered in *Table 1.2. Maintenance and Inspection Checklist*, indicates the areas of the MEWP to be maintained or inspected and at what intervals the maintenance and inspections are to be performed.

1.2-1 Owner's Annual Inspection Record

It is the responsibility of the owner to arrange quarterly and annual inspections of the MEWP. *Table 1.1*. Owner's Annual Inspection Record is to be used for recording the date of the inspection, owner's name, and the person responsible for the inspection of the work platform.

1.2-2 Replacement Parts

Use only original replacement parts. Parts such as batteries, wheels, railings, etc. with weight and dimensions different from original parts will affect stability of the MEWP and must not be used without manufacturer's consent.

All replacement tires must be of the same size and load rating as originally supplied tires; to maintain safety and stability of MEWP.

Consult SKYJACK's Service Department for optional tires specifications and installation.

⚠ WARNING

Any unit that is damaged or not operating properly must be immediately tagged and removed from service until proper repairs are completed.

1.2-3 Maintenance and Service Safety Tips

Maintenance and repair should only be performed by personnel who are trained and qualified to service this MEWP.

All maintenance and service procedures should be performed in a well lighted and well ventilated area.

Anyone operating or servicing this MEWP must read and completely understand all operating instructions and safety hazards in this manual and operating manual.

All tools, supports and lifting equipment to be used must be of proper rated load and in good working order before any service work begins. Work area should be kept clean and free of debris to avoid contaminating components while servicing.

Ensure personnel are clear from under unsupported components/systems that are at risk of movement during maintenance.

All service personnel must be familiar with employer and governmental regulations that apply to servicing this type of equipment.

Keep sparks and flames away from all flammable or combustible materials.

Properly dispose of all waste material such as lubricants, rags, and old parts according to the relative law provisions obtaining in the country.

Before attempting any repair work, disconnect the main power conenctors.

Keep personnel clear of components, systems or unsupported loads that may move unexpectedly during maintenance procedures.

Preventive maintenance is the easiest and least expensive type of maintenance.

1.3 Hydraulic System & Component Maintenance and Repair

The following points should be kept in mind when working on the hydraulic system or any component:

⚠ WARNING

Escaping fluid from a hydraulic pressure leak can damage your eyes, penetrate the skin and cause serious injury. Use proper personal preotection at all times.

1. Any structure has limits of strength and durability. To prevent failure of structural parts of hydraulic components, relief valves which limit pressure to safe operating values are included in the hydraulic circuits.
2. Tolerance of working parts in the hydraulic system is very close. Even small amounts of dirt or foreign materials in the system can cause wear or damage to components, as well as general faulty operation of the hydraulic system. Every precaution must be taken to assure absolute cleanliness of the hydraulic oil.
3. Whenever there is a hydraulic system failure which gives reason to believe that there are metal particles or foreign materials in the system, drain and flush the entire system and replace the filter cartridges. A complete change of oil must be performed under these circumstances.
4. Whenever the hydraulic system is drained, check the magnets in the hydraulic reservoir for metal particles. If metal particles are present, flush the entire system and add a new change of oil. The presence of metal particles also may indicate the possibility of imminent component failure. A very small amount of fine particles is normal.
5. All containers and funnels used in handling hydraulic oil must be absolutely clean. Use a funnel when necessary for filling the hydraulic oil reservoir, and fill the reservoir only through the filter opening. The use of cloth to strain the oil should be avoided to prevent lint from getting into the system.
6. When removing any hydraulic component, be sure to cap and tag all hydraulic lines involved. Also, plug the ports of the removed components.
7. All hydraulic components must be disassembled in spotlessly clean surroundings. During disassembly, pay particular attention to the identification of parts to assure proper reassembly. Clean all metal parts in a clean mineral oil solvent. Be sure to thoroughly clean all internal passages. After the parts have been dried thoroughly, lay them on a clean, lint-free surface for inspection.
8. Replace all O-rings and seals when overhauling any component. Lubricate all parts with clean hydraulic oil before reassembly. Use small amounts of petroleum jelly to hold O-rings in place during assembly.
9. Be sure to replace any lost hydraulic oil when completing the installation of the repaired component, and bleed any air from the system when required.
10. All hydraulic connections must be kept tight. A loose connection in a pressure line will permit the oil to leak out or air to be drawn into the system. Air in the system can cause damage to the components and noisy or erratic system operation.

1.3-1 Maintenance Hints

Three simple maintenance procedures have the greatest effect on the hydraulic system performance, efficiency and life. Yet, the very simplicity of them may be the reason they are so often overlooked. They are simply these:

1. Change filters annually. The filters will need to be changed more often depending on the operating conditions. Dirty, dusty, high moisture environments may cause the hydraulic system to be contaminated more quickly.
2. Maintain a sufficient quantity of clean hydraulic oil of the proper type and viscosity in the hydraulic reservoir.
3. Keep all connections tight.

1.4 Scheduled Maintenance

This section contains the maintenance and inspection schedule that is to be performed.

References are made to the procedures in Section 5 that outline detailed step-by-step instructions for checks and replacements.

1.4-1 Service Bulletins

Before performing any scheduled maintenance inspection procedure, refer to service bulletins found in our web site: *www.skyjackinc.com* for updates related to service and maintenance of this MEWP.

1.4-2 Maintenance and Inspection

Death or injury can result if the MEWP is not kept in good working order. Inspection and maintenance should be performed by competent personnel who are trained and qualified on mantenance of this MEWP.

⚠ WARNING

Failure to perform each procedure as presented and scheduled may cause death, serious injury or substantial damage.

NOTE

Preventive maintenance is the easiest and least expensive type of maintenance.

- Unless otherwise specified, perform each maintenance procedure with the MEWP in the following configuration:
  - MEWP parked on a flat and level surface
  - Disconnect the batteries by disconnecting the main power connectors.
- Repair any damaged or malfunction components before operating MEWP.
- Keep records on all inspections.

1.4-3 Maintenance Instructions

This manual consists of four schedules to be done for maintaining on an MEWP. Inspection schedule frequency is shown below:

Issue or Symptom		
PDI/Frequent	**B**	Perform PDI prior to each delivery, or Frequent Inspection every 3 months or 150 hours.
Annual	**B + C**	Perform Scheduled Maintenance Inspections every year.
Additional	*****	Perform at time sensitive maintenance intervals.

- Make copies of the maintenance and inspection checklist to be used for each inspection.
- Check the schedule on the checklist for the type of inspection to be performed.
- Place a check in the appropriate box after each inspection procedure is completed.
- Use the maintenance and inspection checklist and step-by-step procedures in Section 1 to perform these inspections.
- If any inspection receives a fail, tag and remove the MEWP from service.
- If any MEWP component(s) has been repaired, an inspection must be performed again before removing the tag. Place a check in the repair column.

Legend	
Pass	**P**
Fail	**F**
Repaired	**R**
Not applicable	**N/A**

Table 1.5 Owner's Annual Inspection Record

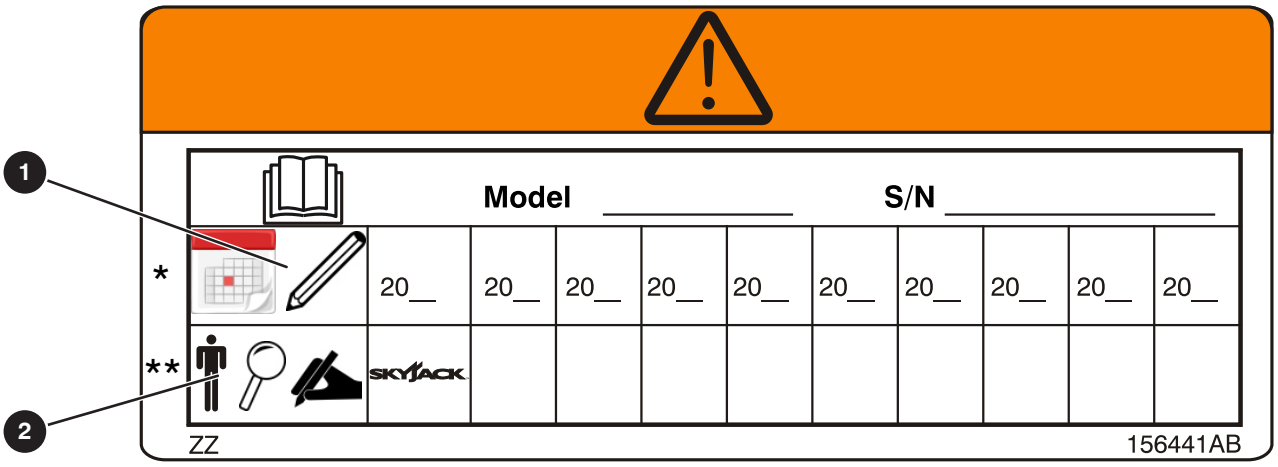

Figure 01 *This decal is located on the scissor assembly. It must be completed after an annual inspection has been completed. Do not use the aerial platform if an inspection has not been recorded in the last 13 months.*

Description	Label Pictorial	Description	Label Pictorial
1 **Inspection Date**		2 **Inspector Signature**	

Pre-Delivery/Maintenance Inspection Checklist

Vertical Mast, SJIII, & Rough Terrain

Serial Number: _____ Product Owner: _____

Model: _____

Hourmeter Reading: _____ Product User: _____

Date/Time: _____

Use this form for Pre-Delivery Inspections (PDI) prior to each rental, lease or sale, or as a guide for all Frequent Inspections and Annual Inspections. Refer to the applicable Operating and Service Manuals for inspection details (eg. Visual Inspection and Function Tests, Torque Specs., Engine Oil, Chain Inspection Intervals, etc.).

Inspection Type Schedule	
❑ PDI	B
❑ Frequent	B
❑ Annual	B + C

B - Perform PDI prior to each delivery or Frequent Inspections every 3 months or 150 hrs. For further details refer to Service & Operating Manuals.

C - Perform Scheduled Maintenance Inspections every year. For further details refer to Service & Operating Manuals.

P - Pass
F - Fail
R - Repaired
N/A - Not Applicable

Check the appropriate box as each item is inspected. If an item is found to be not acceptable, please describe the issue in the comments box provided.

Items for Inspection		P	F	R	N/A
Refer to skyjack.com for the latest service bulletins.	B				
Ensure Annual Inspection has been completed within the last 13 months.	B				
Manuals & Required Documents. In storage box, in good condition & legible.	B				
Labels. In place, secure & legible.	B				
Limit Switches. Secured & no obstructions or damage.	B				
Main Power Disconnect Switch. Cables secure & in working order.	B				
Battery/ Hydraulic Tray. Latch is secure, & no missing parts.	B				
Battery Charger. Secure, & no damage.	B				
Battery. No damage, tight connections, fluid levels correct. Clean terminals and cable ends.	B				
Manifolds. Tight fittings and hoses & no damage or leaks. Tight wire connections & no missing parts.	B, C				
Motor Controller. Secure & no damage. No loose connections.	B				
Electrical Panel / Control Module. Secure & no damage. Tight wire connections and fasteners.	B				
Hydraulic Tank. Filler cap secure & no damage or leaks.	B				
Hydraulic Oil. Level at, or slightly above top mark.	B, C				
Hydraulic Components & Hoses. Secure & no damage or leaks.	B				
Base Weldment. No deformation or cracks.	B				
Base Control Switches. Switches to neutral position & no damage.	B				
Free-wheeling Valve Knob. Secure & no damage or missing parts.	B				
Ladder. Secure & no damage.	B				
AC Power to Platform (Plug Cord Receptacle). No obstructions, dirt or damage.	B				
Pothole Protection Device. Check both sides for obstructions, dirt, or damage.	B				
Brakes. Secure & no damage or leaks.	B, C				
Steer Cylinder Assembly. Secure & no damage, leaks or missing parts.	B				
Wheel/Tire Assembly. Check all tires for damage, wear & proper alignment. Lug nuts torqued as recommended.	B				
Axles. Secure & no missing parts. Tight fittings and hoses & no leaks.	B				
Tie Rod. End studs locked & no damage.	B				
Tilt (Load) Sensor. Secure & no damage.	B				
Emergency Lowering Access Rod. Secure & no damage.	B				
Engine Tray. No damage or missing parts.	B				

Items for Inspection		P	F	R	N/A
Engine Control Console. Secure & no damage.	B				
Engine Air Filter. No damage or missing parts.	B, C				
Engine Oil. Level between "L" and "H". Ensure oil change interval has not been exceeded.	B				
Radiator. Secure & no damage or missing parts. Check coolant level.	B, C				
Muffler and Exhaust. Secure & no damage.	B				
Fuel Shut-off Valve. No damage or missing parts.	B				
Fuel Tank. Filler cap is secure & no damage.	B				
Fuel Leaks. Tight fittings and hoses & no damage or leaks.	B				
Propane Tank. Straps fastened to brackets & coupler tight.	B				
Propane Tank Leaks. No leaks (refer to service manual for procedure).	B				
Scissor Assembly. No deformation/damage. Pins secure. Cables & wires routed with no damage.	B				
Mast Assembly. No damage or deformation. Lubricated	B, C				
Mast Chains. No damage or missing parts.	B, C				
Control Cables. No damage or missing parts.	B, C				
Rollers. Secure & no obstructions, dirt, or damage/wear.	B, C				
Wear Pads. No damage/wear or missing parts. Fasteners tightened.	B, C				
Scissor Bumpers. Secure & no damage.	B				
Sliders. Secure & no obstructions, dirt, or damage/wear.	B				
Maintenance Support. Secure & no damage.	B				
Lift Cylinder(s). No damage or missing parts. Tight fittings and hoses & no leaks.	B				
Scissor Pins. No damage/wear or missing parts.	B				
Platform Control Console. Switches to neutral position & secure. No missing parts.	B				
Raillings and Gate/Chain. Secure & no damage or missing parts.	B				
Lanyard Attachment Anchorage. Attachment rings secure & no damage.	B				
AC Outlet. No obstructions, dirt, or damage.	B				
Powered Extension Control Console. Switches to neutral position & secure. No missing parts.	B				
Extension Deck. Secure & no damage or missing parts. Check fluid level (if applicable).	B				
Outriggers. No damage or missing parts.	B				
Scissor Guards. Secure & no damage.	B				
Greasing Points. No obstructions, dirt, or damage.	B, C				
Function Tests (Refer to your corresponding Serial #'s Operating Manual for information on running these tests.)		❑ **PASS** ❑ **FAIL**			

Comments:

The undersigned confirms that all areas listed have been inspected, and any and all discrepancies have been brought to the attention of the owner. Furthermore, the undersigned confirms that all discrepancies have been corrected prior to using this machine.

Owner: _____ / _____ / _____
Print Name Signature Date (DD/MM/YY)

User: _____ / _____ / _____
Print Name Signature Date (DD/MM/YY)

Note: Visit skyjack.com for a printable copy of this form.

167830AC

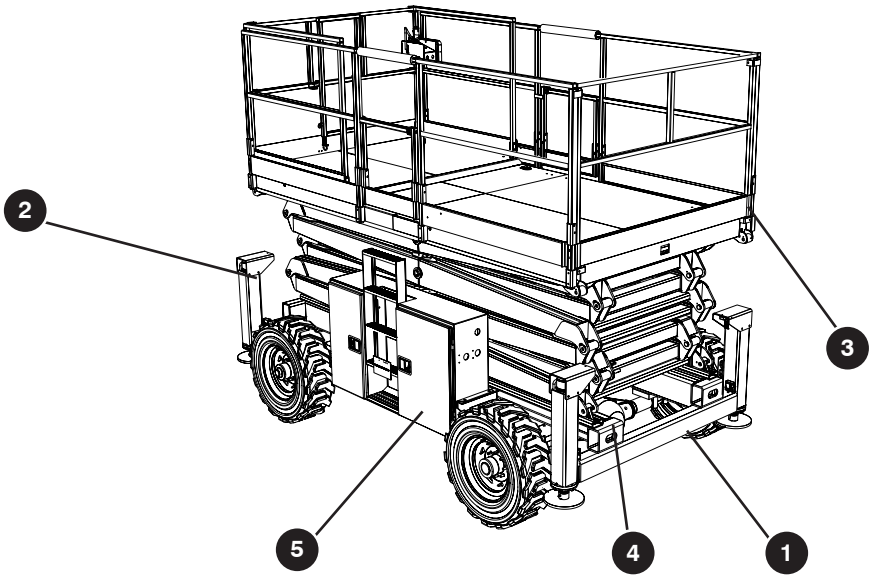

1.6 Scheduled Maintenance Inspections

Begin the scheduled maintenance inspections by checking each item in sequence for the conditions listed in this section.

⚠ WARNING

To avoid injury, do not operate an aerial platform until all malfunctions have been corrected.

⚠ WARNING

To avoid possible injury, ensure aerial platform power is off during your visual and daily maintenance inspections.

1.6-1 Electrical

Maintaining the electrical components is essential to good performance and service life of the aerial platform.

Inspect the following areas for chafed, corroded and loose wires:

- base to platform cables and wiring harness
- engine compartment electrical panel
- engine wiring harness
- hydraulic/electrical wiring harnesses

1.6-2 Hydraulic

Maintaining the hydraulic components is essential to good performance and service life of the aerial platform.

Perform a visual inspection around the following areas:

- hydraulic tank filter, fittings, hoses, emergency power unit (if equipped) and base surfaces
- engine compartment fittings, hoses, main pump, and filter
- all hydraulic cylinders
- all hydraulic manifolds
- the underside of the base 1
- ground area under the aerial platform 2
- outriggers 3

1.6-3 Manuals (B)

Ensure a copy of the operating manual and any other important documents are enclosed in the manual storage box.

- Check to be sure manual storage box is present and in good condition.
- Ensure manuals are legible and in good condition.
- Always return manuals to the manual storage box after use.

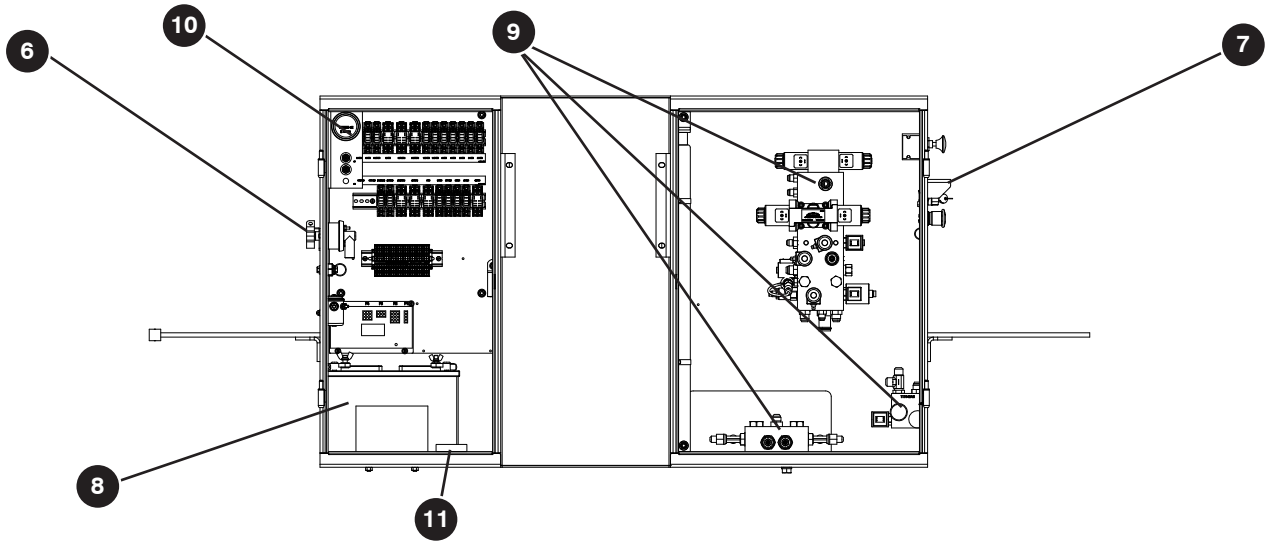

1.6-4 Labels (B)

Refer to the labels section in the operating manual and determine that all labels are in place and are legible.

1.6-5 ❹ Limit Switches (B)

Detecting limit switch malfunction is essential to safe aerial platform operation. Ensure limit switches are properly secured with no signs of visible damage and movement is not obstructed.

1.6-6

Visually inspect all limit switch located inside the scissor arms and the outrigger assemblies for the following:

- broken or missing actuator arm
- missing fasteners
- loose wiring

1.6-7 Emergency Lowering Access Rod (B)(Model 9241)

- Ensure rod is properly secured and there is no visible damage.

1.6-8 ❺ Electrical and Hydraulic Compartment

- Ensure all compartment latches are secure and in proper working order.

❻ Main Power Disconnect Switch (B)

- Turn main power disconnect switch to ◯ off position.
- Ensure all cables are secure and switch is in proper working condition.

❼ Base Control Switches (B)

- Ensure there are no signs of visible damage and all switches are in their neutral positions.

❽ Battery (B)

- Proper battery condition is essential to good performance and operational safety. Improper fluid levels or damaged cables and connections can result in component damage and hazardous conditions.

⚠ WARNING

Explosion hazard. Keep flames and sparks away. Do not smoke near batteries.

⚠ WARNING

Battery acid is extremely corrosive - Wear proper eye and facial protection as well as appropriate protective clothing. If contact occurs, immediately flush with cold water and seek medical attention.

1. Check battery case for damage.
2. **B - Frequent Inspection**
   Clean battery terminals and cable ends thoroughly with a terminal cleaning tool or wire brush.
3. Ensure all battery connections are tight.

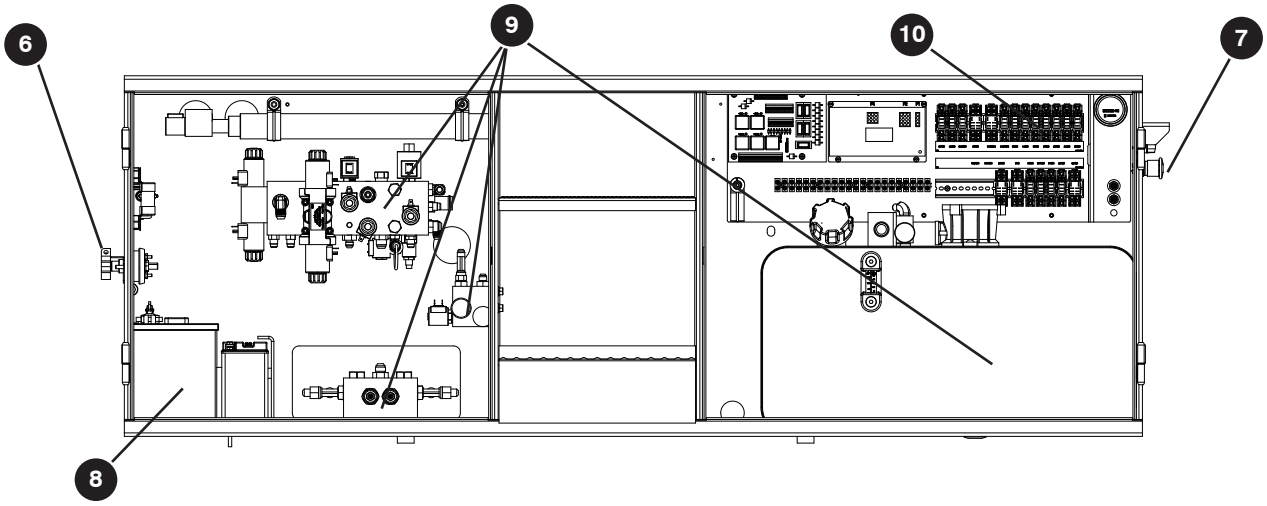

4. If applicable, check battery fluid level.
   B - Frequent Inspection
   If plates are not covered by at least 1/2 in. (13 mm) of solution, add distilled or demineralized water.
5. **B - Frequent Inspection**
   Replace battery if damaged or incapable of holding a lasting charge.

⚠ WARNING

Use original or manufacturer-approved parts and components for the aerial platform.

- ❾ Manifolds (B,C)
  - Ensure all fittings and hoses are properly tightened and there is no evidence of hydraulic leakage.
  - Ensure there are no loose wire connections or missing fasteners.
- ❿ Electrical Panel (B)
  - Ensure panel is properly secured and there is no visible damage.
  - Ensure there are no loose wire connections or missing fasteners.
- ⓫ Tilt Sensor (B)
  - Ensure tilt sensor is properly secured and there is no visible damage.

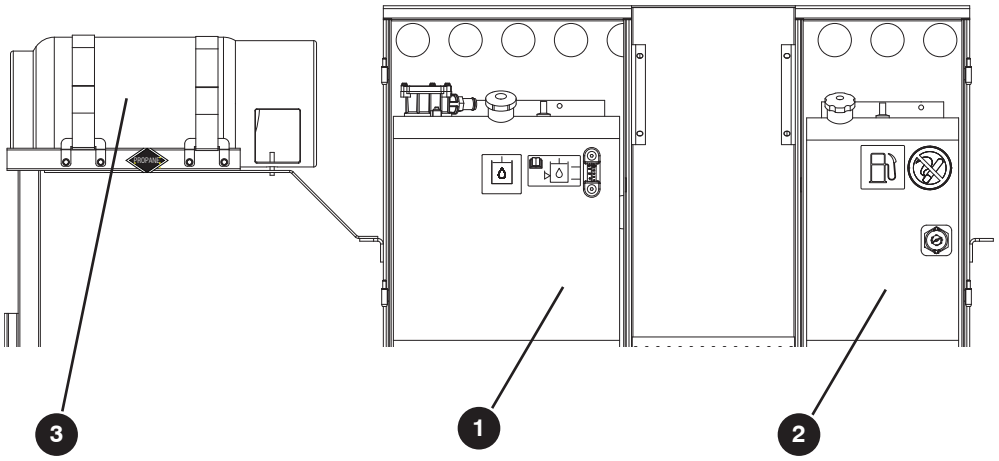

1.6-9 Fuel and Hydraulic Compartment

- Ensure all compartment latches are secure and in proper working order.
- ❶ Hydraulic Tank (B)
  - Ensure hydraulic filler cap is secure.
  - Ensure tank shows no visible damage and no evidence of hydraulic leakage.
- Hydraulic Oil (B,C)
  - Ensure platform is fully lowered, and outriggers retracted, and then visually inspect the sight gauge located on the side of the hydraulic oil tank. Check oil level against label that indicates minimum and maximum oil levels.
  - C - Annual Inspection
  - 1.3 Hydraulic System & Component Maintenance and Repair.
- ❷ Fuel Tank (B)

IMPORTANT

Before using your aerial platform ensure there is enough fuel for expected use.

- Ensure fuel filler cap is secure.
- Ensure tank shows no visible damage and no evidence of fuel leakage.
- Fuel Leaks (B)
  - Ensure there are no fuel leaks.

⚠ DANGER

Engine fuels are combustible. Inspect the aerial platform in an open, well-ventilated area away from heaters, sparks and flames. Always have an approved fire extinguisher within easy reach.

- Ensure fuel pump, fuel filter, hoses and fittings show no visible damage and no evidence of fuel leakage.
- ❸ Propane Tank (If Equipped) (B)
  - Ensure metal peg on compartment floor is inserted into propane tank rim.
  - Ensure propane tank straps are fastened tightly to brackets.
  - Ensure coupler to propane tank is tight.
- Propane Tank Leaks (If Equipped) (B)
  - Ensure there are no fuel leaks.
  - To check for leaks, close valve (turn clockwise) and apply soap water or neutral detergent to pipe connection and propane tank.
  - Open valve fully and check for any bubbles, indicating gas leaks.
  - Wipe off soap water or detergent after inspection is completed.

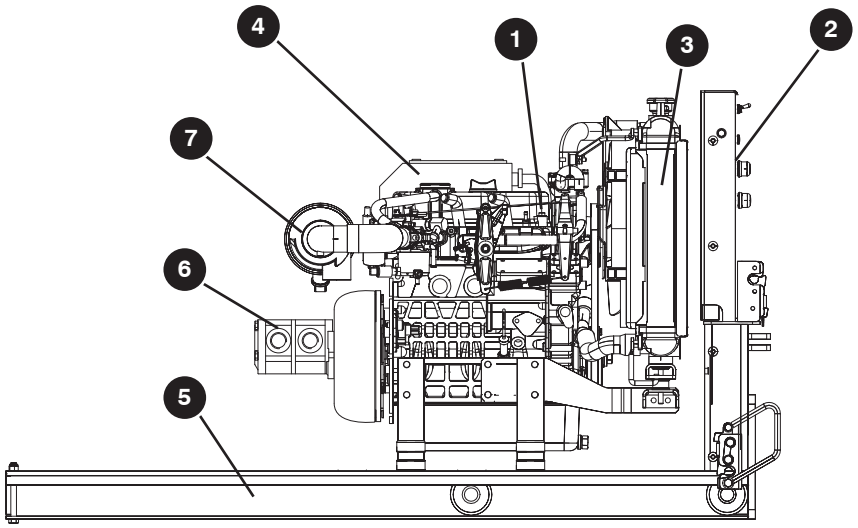

1.6-10 ❶ Engine Compartment

⚠ WARNING

Beware of hot engine components.

1. Pull on the two latches to pull out engine compartment.

- ❷ Engine Control Console (B)
  - Ensure all switches are returned to neutral and are properly secured.
  - Ensure there are no loose or missing parts and there is no visible damage.

⚠ WARNING

Beware of hot liquids and radiator components.

- ❸ Radiator (B,C)
  - Ensure radiator is secure.
  - Ensure there are no loose or missing parts and there is no visible damage.
  - Check coolant level and add as needed.
  - C - Annual Inspection
  - For recommended coolant change, refer to engine manual.
- ❹ Muffler and Exhaust (B)
  - Ensure muffler and exhaust system are properly secured, with no evidence of damage.
- ❺ Engine Tray (B)
  - Ensure there are no loose or missing parts and no visible damage to the engine tray.
  - Ensure that fasteners/bolts/pins/latches are in place.
- ❻ Hydraulic Pump (B)
  - Ensure there are no loose or missing parts and there is no visible damage.
  - Ensure all bolts are properly tightened.
  - Ensure all fittings and hoses are properly tightened and there is no evidence of hydraulic leakage.

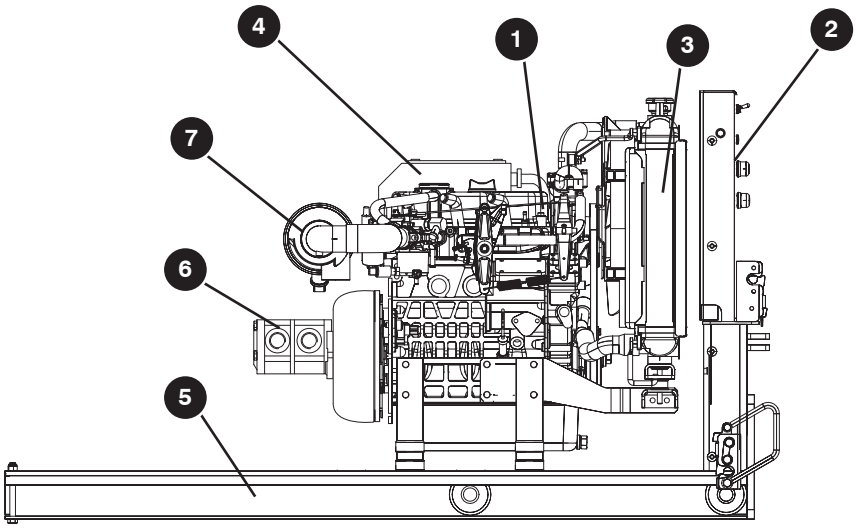

- ❼ Engine Air Filter (B,C)
  - Ensure there are no loose or missing parts and there is no visible damage.
  - B - Frequent Inspection
  - For engine air filter maintenance procedure, refer to engine manual.
  - C - Annual Inspection
  - For engine air filter replacement procedure, refer to engine manual.

- Engine Oil (B,C)
  - Maintaining the engine components is essential to good performance and service life of the aerial platform.
  - **Check oil level on dipstick**
  - Oil level should be between the L and H marks.
  - B - Frequent Inspection
  - For recommended oil change, refer to engine manual

- Fuel Leaks (B,C)
  - Ensure there are no fuel leaks.

⚠ DANGER

Engine fuels are combustible. Inspect the aerial platform in an open, well-ventilated area away from heaters, sparks and flames. Always have an approved fire extinguisher within easy reach.

  - Ensure fuel pump, fuel filter, hoses and fittings show no visible damage and no evidence of fuel leakage.
  - C - Annual Inspection
  - For engine fuel filter replacement procedure, refer to engine manual.

2. Push in engine compartment until the two latches lock to base.

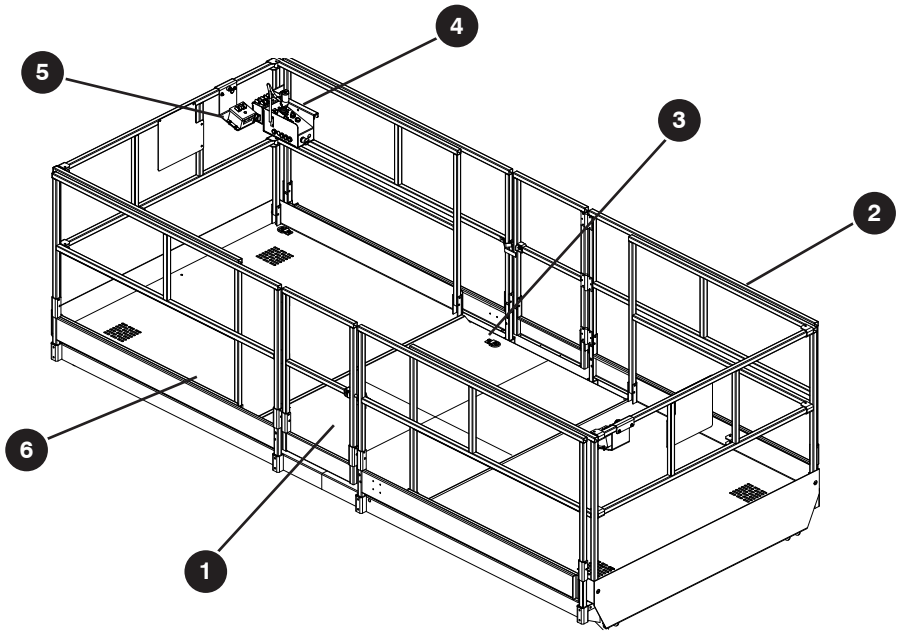

1.6-11 ❶ Platform Assembly

⚠ WARNING

Ensure that you maintain three points of contact to mount/dismount platform

1. Use the ladder of aerial platform to access platform.

2. Close the gate.

   - Ensure there are no loose or missing parts and there is no visible damage.
   - Ensure all fasteners are securely in place.
   - Ensure all railings ❷ are properly positioned and secured.
   - Ensure gate is in good working order.

- ❸ Lanyard Attachment Anchorage (B)
  - Ensure attachment rings are secure and have no visible damage.

- AC Outlet on Platform (B)
  - Ensure outlet has no visible damage and free from dirt or obstructions.

- ❹ Platform Control Console (B)
  - Ensure all switches and controller are returned to neutral and are properly secured.
  - Ensure there are no loose or missing parts and there is no visible damage.

- ❺ Powered Extension Control Console (B)
  - Ensure all switches are returned to neutral and are properly secured.
  - Ensure there are no loose or missing parts and there is no visible damage.

⚠ WARNING

Ensure that you maintain three points of contact to mount/dismount platform

3. Use the ladder to dismount from platform.

- ❻ Powered Extension Deck (B)
  - Ensure assembly is securely attached to the bottom of the platform.
  - Ensure there are no loose or missing parts and there is no visible damage or leaks.

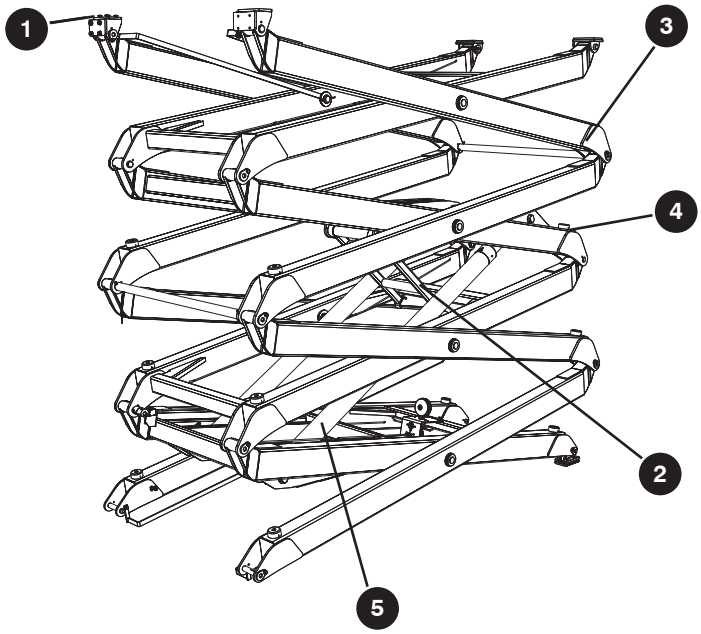

1.6-12 Lifting Mechanism

- 1 Sliders (B)
  - Ensure sliders are secure and there is no visible damage.
  - Ensure sliders' path of travel are free from dirt and obstructions.

1. Raise the platform until there is adequate clearance to swing down the maintenance support.

- 2 Maintenance Support (B)
  - Ensure maintenance support is properly secured and shows no visible damage.

- 3 Scissor Assembly (B)
  - Ensure scissor assembly shows no visible damage and no signs of deformation in weldments.
  - Ensure all pins are properly secured.
  - Ensure cables and wires are properly routed and shows no signs of wear or physical damage.

- 4 Scissor Bumpers (B)
  - Ensure bumpers are secure and shows no sign of visible damage.

- Scissor Pin Inspection (B)
  - Complete a structural inspection of the scissor pin connections, looking for indicators of pin and scissor arm damage. These indicators include, but are not limited to:
  - Noise coming from binding/seized pins
  - Rust forming near pin joint
  - Cracks in welds or in surrounding metal
  - Evidence of metal dust or shavings from wearing components
  - Broken/missing pin retainer bolts
  - Broken/missing pin retainers
  - Rotated pin
  - Elongation/enlargement of pin hole

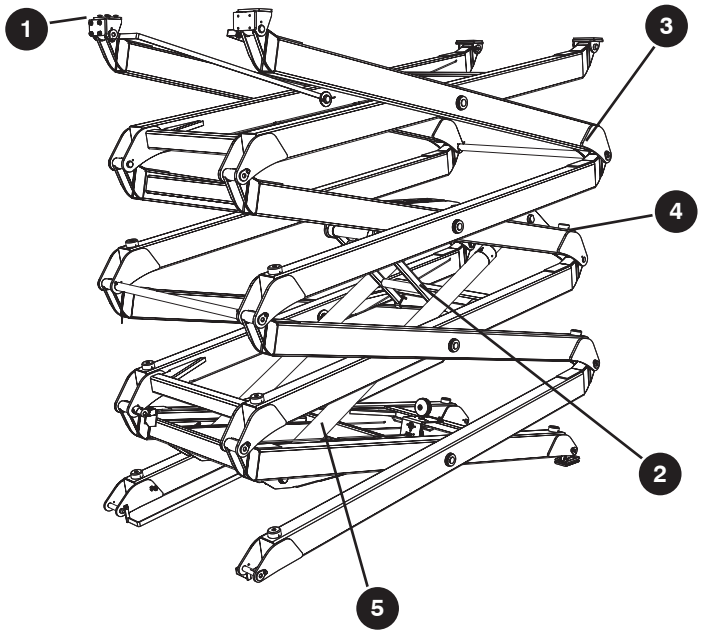

Examples of pivot pin connections with no damage:

- No rust
- Pin has not rotated
- Area is clear of dust/metal shavings
- Pin retainer/retainer bolts are in place

Pin retainer bolts in place

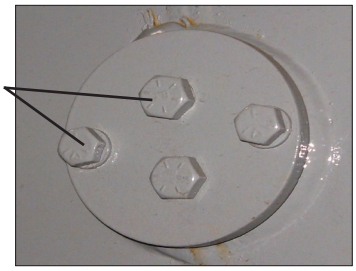

Center pin pivot - Outer

Pin retainer in place





Center pin pivot - Middle

No rust. Pin has not rotated. Area is clean of dust/metal shavings



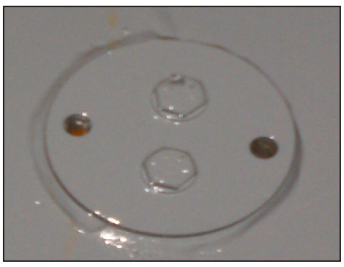

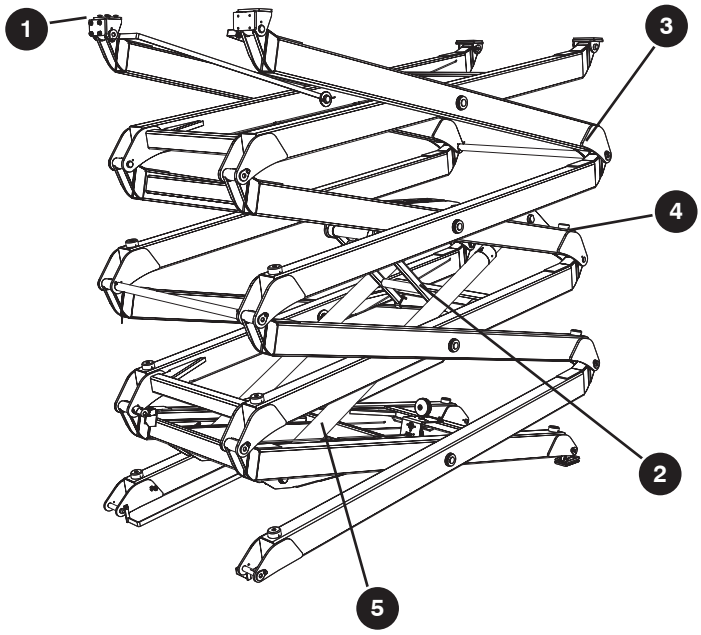

Examples of damaged pin connections:

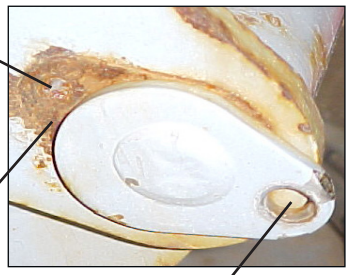



Scissor end pin connections showing symptoms of damage must be inspected after removing the applicable pins and bushings. The scissor bore should also be inspected at this time for any signs of damage, specifically elongation of the hole. Provided there is no structural damage to the scissor arms, the pins and bushings can be replaced with new components.

⚠ WARNING

Any units showing the above signs of damage should be immediately removed from service and repaired by a qualified technician.

Any units with structural damage to any pin connection or scissor arm must be immediately removed from service and repaired by a qualified technician. Contact Skyjack Service for direction on how to repair the unit.

- 5 Lift Cylinder(s) (B)
  - Ensure each lift cylinder is properly secured, there are no loose or missing parts and there is no evidence of damage.
  - Ensure all fittings and hoses are properly tightened and there is no evidence of hydraulic leakage.

2. Raise the platform until there is adequate clearance to swing up the maintenance support into storage bracket.
3. Fully lower the platform.

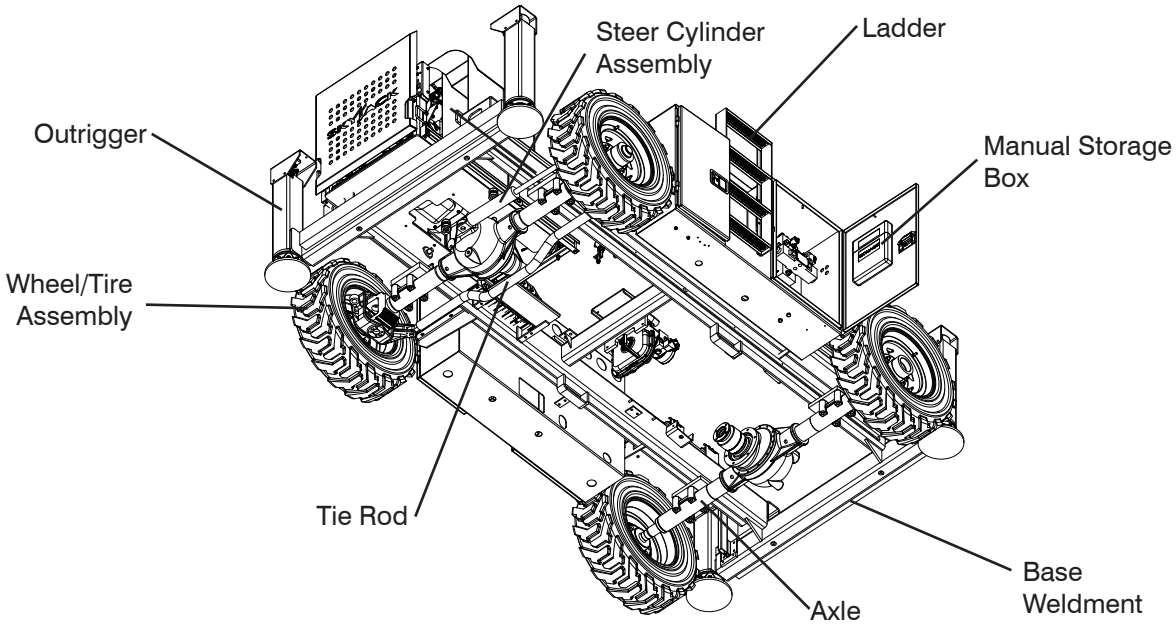

1.6-13 Base

1.6-14

- Base Weldment (B)
  - Ensure there are no visible cracks in welds or structure and there are no signs of deformation.
- Wheel/Tire Assembly (B)
  - The aerial platform is either equipped with air tires or foam-filled tires. Tire or wheel failure could result in the aerial platform tipping over. Component damage may also result if problems are not discovered and repaired in a timely fashion.

⚠ WARNING

An over-inflated tire can explode and may cause death or serious injury.

⚠ WARNING

Air filled tires may not permitted on some machines. Refer to Table 2.3.

  - Check all tire treads and sidewalls for cuts, cracks, punctures and unusual wear.
  - Check each wheel for damage and cracked welds.
  - Check each lug nut for proper torque to ensure none are loose.
  - B - Frequent Inspection
  - For proper torque information refer to Table 2.6.
  - To maximize stability, it is essential to maintain proper pressure in all air-filled tires.
  - Check each tire with an air pressure gauge and add air as needed.

Refer to Table 2.3 for wheel/tire specifications.

⚠ WARNING

Do not use tires other than those specified for this machine. Do not mix different types of tires. Tires other than those specified can adversely affect stability. Failure to operate with matched, approved tires in good condition can result in death or serious injury. Replace tires with the exact, Skyjack-approved types only.

- Axles (B)
  - Ensure axles are properly secured, there are no loose or missing parts, all fittings and hoses are properly tightened and there is no evidence of hydraulic leakage.

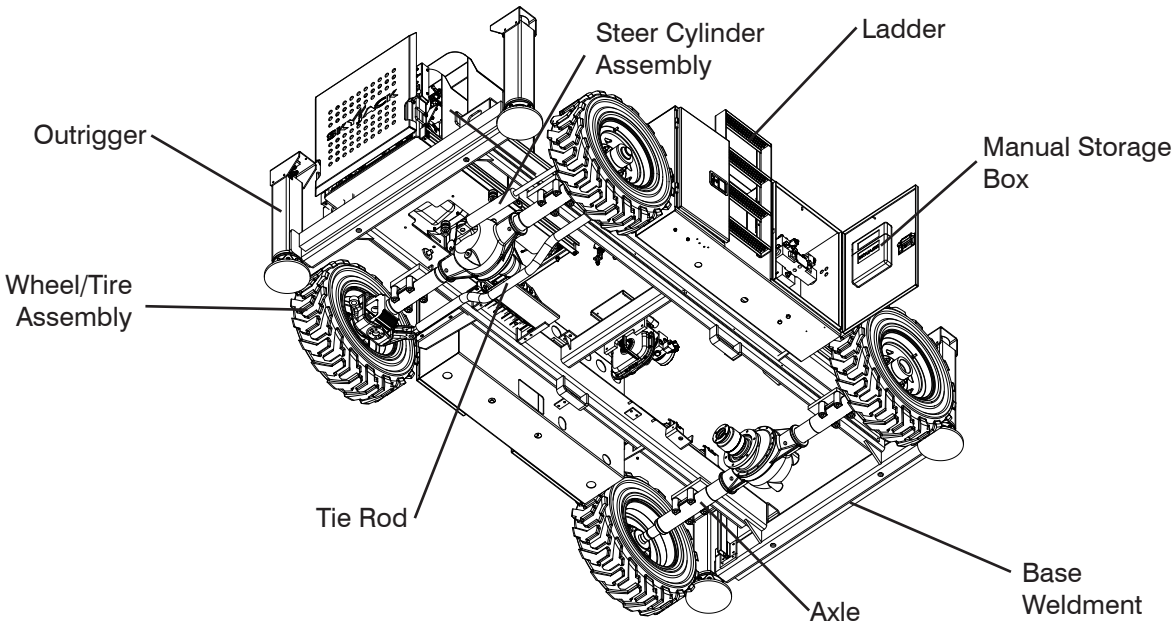

- Steer Cylinder Assembly (B)
  - Ensure steer cylinder assembly is properly secured, there are no loose or missing parts, all fittings and hoses are properly tightened and there is no evidence of hydraulic leakage.
- Tie Rod (B)
  - Ensure there are no loose or missing parts, tie rod end studs are locked and there is no visible damage.
- Ladder (B)
  - Ensure there are no loose or missing parts and there is no visible damage.
- Outriggers (If Equipped) (B)
  - Ensure there are no loose or missing parts and there is no visible damage.

1.6-15 Function Tests

⚠ WARNING

Avoid hazardous situations. Never use a malfunctioning aerial platform. If malfunctions are discovered, tag the machine and take it out of service. Have repairs made by a qualified service technician.

Function Tests are designed to discover any malfunctions before the aerial platform is put into service. The operator must understand and follow step-by-step instructions to test all aerial platform functions.

Prior to performing function tests, be sure to read and understand the Start Operation section of the Operator's Manual.

Refer to the Operator's Manual for a list of function tests. These instructions detail which tests must be performed, as well as how to properly and safely perform them.

After repairs are completed, the operator must perform a pre-operation inspection and a series of function tests again before putting aerial platform into service.

Notes

Section 2 – Maintenance Tables and Diagrams

Table 2.1 Specifications and Features

MODEL	8831	8841	9241	9250
Weight*	5684 kg	6173 kg	6718 kg	7407 kg
Overall Width	2.2 m		2.34 m	
Overall Length	3.7 m		4.55 m	
Platform Size (inside)	1.7 m x 3.5 m		1.85 m x 4.39 m	
Height				
Working Height	11.6 m	14.5 m	14.5 m	17.2 m
Platform Elevated Height	9.6 m	12.5 m	12.5 m	15.2 m
Stowed Platform Height	1.5 m	1.8 m	1.68 m	2 m
Drive Height	Full			9.1m
Standard Operating Times				
Lift Time (Rated Load)	52 s	56 s	62 s	64 s
Lower Time (Rated Load)	47 s	53 s	59 s	86 s
Chassis				
Normal Drive Speed	4.2 km/h		3.8 km/h	
Elevated Drive Speed	0.35 km/h		0.72 km/h	
Gradeability (Ramp Angle)	30%			
Tires (Solid Rubber)	Refer to Table 4.6 for tire specification and usage.			
Hydraulic Oil				
Type	ATF Dexron III			
Tank Capacity (Liters)	75.71		67.38	
Engine (RPM)				
Engine Type	Kubota D1305			
RPM Settings	1400 (Low) / 2800 (High)			
Fuel Type	Diesel			
Fuel Tank Capacity (Liters)	49.21		64.35	
Engine Oil Type	SAE 10W-30			
Recommended Alternative Engine Oil	10W-30, API Service Designation CG-4, CF-4, CF, CD, SH			
Engine Oil Capacity (Liters)	6			
Coolant Type	Anti-freeze / Water			
Coolant Capacity (Liters)	4			
Sound Pressure Level (ISO 3744)	67dB(A)			
Guaranteed MaximumSound Power Level (ISO 4871)	103dB			

** Weights are approximate; refer to serial nameplate for specific weight. Values shown for models 8831, 8841 are for standard 4WD aerial platforms on foam filled tires and two rollout extension platforms. Values shown for models 9241 & 9250 are for standard 4WD on foam tires with two powered extension platforms.*

1634

Table 2.2 Maximum Platform Capacities (Evenly Distributed)

Model		Total		First Extension		Second Extension		Maximum Wind Speed	Tilt Cutout Setting (Degrees)	Tilt Cutout Setting (Outrig-gers) (Degrees)
		Capacity	Number of Occupants	Capacity	Number of Occupants	Capacity	Number of Occupants			
8831	Two Extension Platforms	681 kg (1500 lb)	5	227 kg (500 lb)	2	227 kg (500 lb)	2	12.5 m/s (28 mph)	2.5 x 4.5	1.5 x 1.5
8841	Two Extension Platforms	681 kg (1500 lb)	5	227 kg (500 lb)	2	227 kg (500 lb)	2	12.5 m/s (28 mph)	2.5 x 4.5	1.5 x 1.5
9241	Two Extension Platforms	681 kg (1500 lb)	5	227 kg (500 lb)	2	227 kg (500 lb)	2	12.5 m/s (28 mph)	2.5 x 4.5	1.5 x 1.5
9250	Two Extension Platforms	681 kg (1500 lb)	5	227 kg (500 lb)	2	227 kg (500 lb)	2	12.5 m/s (28 mph)	2.5 x 4.5	1.5 x 1.5

1635AB

NOTE

Occupants and materials are not to exceed rated load.
Capacities listed are for standard machines equipped with #6 tires

Refer to capacity label at sides of platform for additional information and for models equipped with options.

WARNING

Maximum Wind Speed = 12.5 m/sec

Table 2.3 Floor Loading Pressure

Model		Total Aerial Platform Weight	First Extension		
			WHEEL	LCP **	OUP **
		kg	kg	kPa	kg/m2
8831	min*	5536	2214	1254	719
	max*	6788	2715	1399	882
8831 Outrigger Pads	min*	5831	2333	451	690
	max*	6788	2715	525	804
8841	min*	6174	2448	1312	795
	max*	7145	2858	1455	928
8841 Outrigger Pads	min*	6174	2566	496	759
	max*	7145	2858	553	846
9241	min*	6718	2687	1408	887
	max*	7448	2979	1495	893
9241 Outrigger Pads	min*	6718	2687	520	700
	max*	7448	2979	577	705
9250	min*	7407	2963	1490	969
	max*	8137	3255	1576	975
9250 Outrigger Pads	min*	7407	2963	573	765
	max*	8137	3255	630	770

*

1636AA

min - Total aerial platform weight with no options
max - Aerial platform weight + all options + capacity

**

LCP - Locally Concentrated Pressure is a measure of how hard the aerial platform presses on the areas in direct contact with the floor. The floor covering (tile, carpet, etc.) must be able to withstand more that the indicated values above.
OUP - Overall Uniform Pressure is a measure of the average load the aerial platform imparts on the whole surface directly underneath it. The structure of the operating surface (beams, etc.) must be able to withstand more than the indicated values above.

NOTE

The LCP or OUP that an individual surface can withstand varies from structure to structure and is generally determined by the engineer or architect for that particular structure.

Floor Loading Pressure

Locally Concentrated Pressure (LCP):

Foot Print Area = Length x Width

or = $\frac{\pi D^2}{4}$ (for outriggers)

$$LCP = 0.4 \times \frac{\text{Weight of Aerial Platform + Capacity}}{\text{Foot Print Area}}$$

Overall Uniform Pressure (OUP):

Base Area = Length x Width

$$OUP = \frac{\text{Weight of Aerial Platform + Capacity*}}{\text{Base Area}}$$

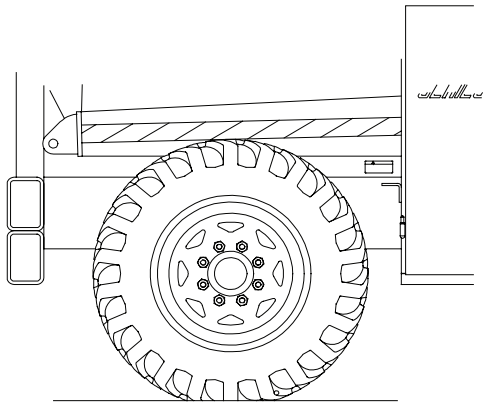

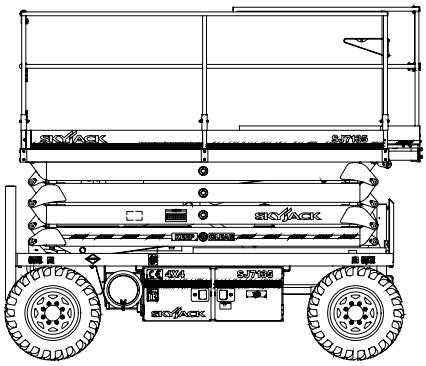

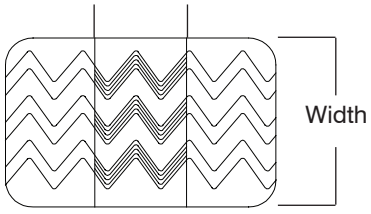

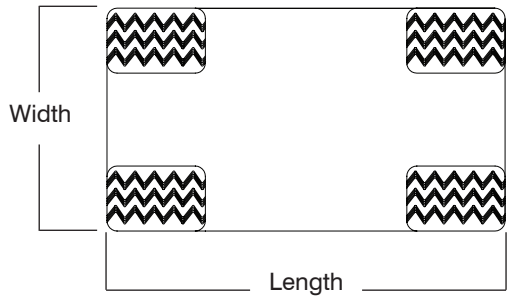

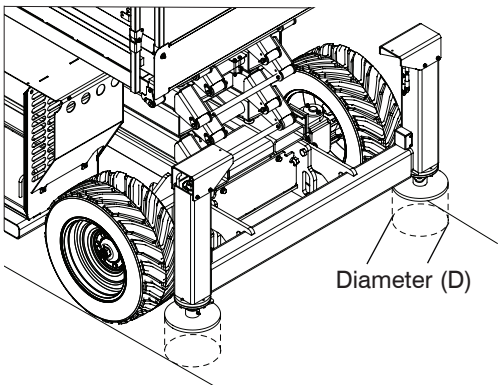

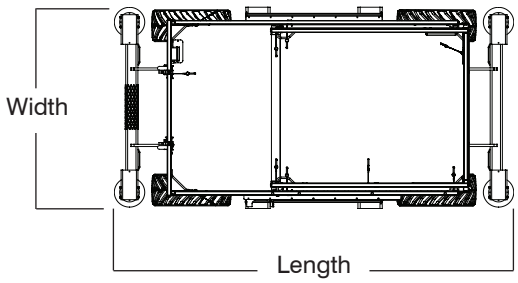

Table 2.4 Tire Specifications

⚠ WARNING

Tires must be checked by end user on a daily basis. Do not intermix tires of different types on one MEWP. Use only tires of type originally supplied.

Tire Size		Fill Specification			Usage*			
		Fill Type	Ply Rating	Pressure (Factory) (KPa)	Full-Size			
					8831	8841	9241	9250
#6F	10-16.5 CARLISLE US LOADER	Foam	10	N/A	S	S	S	s
#6F	10-16.5 OTR OUTRIGGER (Non-Marking)		10	N/A	O	O	N/A	N/A

**Usage: (S)tandard OR (O)ptional*
(N/A) Not Available

1640

Rim Backspace Diagram

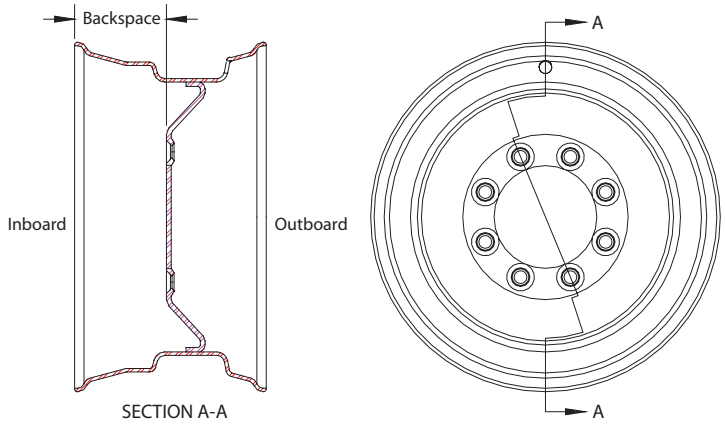

Tire Size	Backspace			
	8831	8841	9241	9250
#6F	121mm	121mm	95mm	95mm

1642

⚠ WARNING

Do not use tires other than those specified for this machine. Do not mix different types of tires. Tires other than those specified can adversely affect stability. Failure to operate with matched, approved tires in good condition can result in death or serious injury. Replace tires with the exact, Skyjack-approved types only.

Table 2.5 Fluids

Gear Oil and Additive				
Component Type	Capacity (Liters)	Capacity (US gal)	Oil Type	
Axle (Front/Rear)	2.4	0.634	Gear Oil, 80W-90 GL5	
Center Drive	0.8	0.21		
Axle (Front)	0.12	0.032	Friction Modifier, DANA 816289Ch	
Hydraulic Oil				
Model	Capacity (Liters)	Capacity (US gal)	Oil Type	
SJ71XXRT	80.5	21.26	ATF Dexron III	
SJ88X1RT	75.7	20.00	ATF Dexron III Shell Naturelle HF-E 32 (biodegradable)	
SJ92XXRT	67.4	17.80		
Engine Oil				
Engine Type	Capacity (Liters)	Capacity (US gal)	Engine Oil Type	Recommended Equivalent Oil
Kubota D1105	3.1	0.818	SAE 10W-30	10W-30 - API Service Designation CG-4, CF-4, CD, SH
Kubota D1305	3.1	0.818		
Kubota D972	3.4	0.898		
GM 1.6L	3.7	0.977		10W-30 - API Service Designation SF/CC
Engine Coolant				
Engine Type	Capacity (Liters)	Capacity (US gal)	Coolant Type	
Kubota D1105	5.1	1.346	50/50 mix of Anti-freeze / Distilled Water	
Kubota D1305	5.1	1.346	Anti-freeze 50/50 Premix	
Kubota D972	3.5	0.924	Anti-freeze 50/50 Premix	
GM 1.6L	6	1.584	50/50 mix of Extended Life Anti-freeze / Distilled Water	
Engine Fuel				
Engine Type	Capacity (Liters)	Capacity (US gal)	Kubota D1105/ D1305	Kubota D972 / GM 1.6 L
SJ71XXRT	80.48	21.26	Diesel	Unleaded Gasoline
SJ88X1RT	49.21	13	Diesel	Unleaded Gasoline
SJ92XXRT	64.35	17	Diesel	Unleaded Gasoline

1622AA

Table 2.6 Torque Specifications

CARTRIDGE						
Torque	**Size**					
	8	**38**	**58**	**10**	**12**	**16**
Lb-ft (max)	20			25	35	50
Lb-in (max)	240			300	420	600
Nm (max)	27.12			33.9	47.46	67.8

COILS	
Torque	Size
	All coils
Lb-ftt (max)	4 to 5
Lb-in (max)	48 to 60
Nm (max)	5.42 to 6.78

SAE PLUGS								
Torque	Size							
	2	4	5	6	8	10	12	16
Lb-ft (max)	3	10	15		25		30	35
Lb-in (max)	36	120	180		300		360	420
Nm (max)	4.07	13.56	20.34		33.9		40.68	47.46

BOLTS		
Type of Bolt	Torque (ft-lb)	Torque (Nm)
Directional valve m ounting bolts	2.33 (28-32 in-lb)	3.16 - 3.61
Wheel mounting bolts	140	189.8
Center drive sprocket mounting bolts	110 - 115 (242 Loctite)	149 -156
Hydraulic drive motor mounting bolts	120 (242 Loctite)	162
Positive battery post cable/fuse nut	7.5 (90 in-lb)	10.2
Newton-meter = Nm	Foot-Pound Force = ft-lb	Inch-Pound Force = in-lb

1623AA

Table 2.7 Torque Specifications for Fasteners (Imperial)

Size	Torque Type	SAE2		SAE 5		SAE 8	
		Dry	Lubed	Dry	Lubed	Dry	Lubed
4-40	(in-lb)	(5)	(4)	(8)	(6)	(12)	(9)
	Nm	0.6	0.5	0.9	0.7	1.4	1.0
4-48	(in-lb)	(6)	(5)	(9)	(7)	(13)	(10)
	Nm	0.7	0.6	1.0	0.8	1.5	1.1
6-32	(in-lb)	(10)	(8)	(16)	(12)	(23)	(17)
	Nm	1.1	0.9	1.8	1.4	2.6	1.9
6-40	(in-lb)	(12)	(9)	(18)	(13)	(25)	(19)
	Nm	1.4	1.0	2.0	1.5	2.8	2.1
8-32	(in-lb)	(19)	(14)	(30)	(22)	(41)	(31)
	Nm	2.1	1.6	3.4	2.5	4.6	3.5
8-36	(in-lb)	(20)	(15)	(31)	(23)	(43)	(32)
	Nm	2.3	1.7	3.5	2.6	4.9	3.6
10-24	(in-lb)	(27)	(21)	(43)	(32)	(60)	(45)
	Nm	3.1	2.4	4.9	3.6	6.8	5.1
10-32	(in-lb)	(31)	(23)	(49)	(36)	(68)	(51)
	Nm	3.5	2.6	5.5	4.1	7.7	5.8
1/4-20	(in-lb) ft-lb	(66)	(50)	8	(75)	12	9
	Nm	7.5	5.6	11	8.5	16	12
1/4-28	(in-lb) ft-lb	(76)	(56)	10	(86)	14	10
	Nm	8.6	6.3	14	9.7	19	14
5/16-18	ft-lb	11	8	17	13	25	18
	Nm	15	11	23	18	34	24
5/16-24	ft-lb	12	9	19	14	25	20
	Nm	16	12	26	19	34	27
3/8-16	ft-lb	20	15	30	23	45	35
	Nm	27	20	41	31	61	47
3/8-24	ft-lb	23	17	35	25	50	35
	Nm	31	23	47	34	68	47
7/16-14	ft-lb	32	24	50	35	70	55
	Nm	43	33	68	47	95	75
7/16-20	ft-lb	36	27	55	40	80	60
	Nm	49	37	75	54	108	81
1/2-13	ft-lb	50	35	75	55	110	80
	Nm	68	47	102	75	149	108
1/2-20	ft-lb	55	40	90	65	120	90
	Nm	75	54	122	88	163	122
9/16-12	ft-lb	70	55	110	80	150	110
	Nm	95	75	149	108	203	149
9/16-18	ft-lb	80	60	120	90	170	130
	Nm	108	81	163	122	230	176
5/8-11	ft-lb	100	75	150	110	220	170
	Nm	136	102	203	149	298	230
5/8-18	ft-lb	110	85	180	130	240	180
	Nm	149	115	244	176	325	244
3/4-10	ft-lb	175	130	260	200	380	280
	Nm	237	176	353	271	515	380
3/4-16	ft-lb	200	150	300	220	420	320
	Nm	271	203	407	298	569	434
7/8-9	ft-lb	170	125	430	320	600	460
	Nm	230	169	583	434	813	624
7/8-14	ft-lb	180	140	470	360	660	500
	Nm	244	190	637	488	895	678
1-8	ft-lb	250	190	640	480	900	680
	Nm	339	258	868	651	1220	922
1-12	ft-lb	270	210	710	530	1000	740
	Nm	366	285	963	719	1356	1003
1-14	ft-lb	280	210	730	540	1020	760
	Nm	380	285	990	732	1383	1030
1 1/8-7	ft-lb	350	270	800	600	1280	960
	Nm	475	366	1085	813	1735	1302
1 1/8-12	ft-lb	400	300	880	660	1440	1080
	Nm	542	407	1193	895	1952	1464
1 1/4-7	ft-lb	500	380	1120	840	1820	1360
	Nm	678	515	1519	1139	2468	1844
1 1/4-12	ft-lb	550	420	1240	920	2000	1500
	Nm	746	569	1681	1247	2712	2034
1 3/8-6	ft-lb	670	490	1460	1100	2380	1780
	Nm	908	664	1979	1491	3227	2413
1 3/8-12	ft-lb	750	560	1680	1260	2720	2040
	Nm	1017	759	2278	1708	3688	2766
1 1/2-6	ft-lb	870	650	1940	1460	3160	2360
	Nm	1180	881	2630	1979	4284	3200
1 1/2-12	ft-lb	980	730	2200	1640	3560	2660
	Nm	1329	990	2983	2224	4827	3606

** Inch-Pound Force = in-lb Foot-Pound Force = ft-lb*
Newton-Meter = Nm

1612

Table 2.8 Torque Specifications for Fasteners (Metric)

Size	Torque Type	SAE2		SAE 5	
		Dry	Lubed	Dry	Lubed
M5 x 0.80	(in-lb)	(54)	(41)	(78)	(59)
	Nm	6.1	4.6	8.8	6.7
M6 x 1.00	(in-lb)	(92)	(69)	(133)	(99)
	Nm	10.4	7.8	15	11.2
M7 x 1.00	(in-lb)	(156)	(116)	(222)	(167)
	Nm	17.6	13.1	25.1	18.9
M8 x 1.25	(in-lb)	(225)	(169)	(333)	(242)
	Nm	25.4	19.1	37.6	27.3
M10 x 1.50	ft-lb	37	28	53	40
	Nm	50	38	72	54
M12 x 1.75	ft-lb	65	49	93	69
	Nm	88	66	126	94
M14 x 2.00	ft-lb	104	78	148	111
	Nm	141	106	201	150
M16 x 2.00	ft-lb	161	121	230	172
	Nm	218	164	312	233
M18 x 2.50	ft-lb	222	167	318	238
	Nm	301	226	431	323
M20 x 2.50	ft-lb	314	235	449	337
	Nm	426	319	609	457
M22 x 2.50	ft-lb	428	321	613	460
	Nm	580	435	831	624
M24 x 3.00	ft-lb	543	407	776	582
	Nm	736	552	1052	789
M27 x 3.00	ft-lb	796	597	1139	854
	Nm	1079	809	1544	1158
M30 x 3.50	ft-lb	1079	809	1543	1158
	Nm	1463	1097	2092	1570
M33 x 3.50	ft-lb	1468	1101	2101	1576
	Nm	1990	1493	2849	2137
M36 x 4.00	ft-lb	1886	1415	2699	2024
	Nm	2557	1918	3659	2744

Inch-Pound Force = in-lb Foot-Pound Force = ft-lb Newton-Meter = Nm *1613*

NOTE: *Lubed includes lubricants such as lubrizing, oil, grease, or uncured Loctite.*

Table 2.9 Torque Specifications for Hydraulic Couplings and Hoses

Hydraulic Coupling Torque Chart O-Ring Port Connectors				
SAE Size	Steel Ports		Non-ferrous Ports	
	ft-lb	Nm	ft-lb	Nm
4	14-16	20-22	9-10	12-13
6	24-26	33-35	15-16	20-21
8	50-60	68-78	30-36	41-47
10	72-80	98-110	43-48	60-66
12	125-135	170-183	75-81	102-110
16	200-220	270-300	120-132	162-180
20	210-280	285-380	126-168	171-228
24	270-360	370-490	162-216	222-294
32	-	-	-	-

Hose End Torque Chart for JIC									
Size		Steel				Brass			
Dash	Frac.	ft-lb		Nm		ft-lb		Nm	
		Min.	Max.	Min.	Max.	Min.	Max.	Min.	Max.
-4	1/4"	10	11	13	15	5	6	6.75	9
-6	3/8"	17	19	23	26	12	15	17	20
-8	1/2"	34	38	47	52	20	24	27.66	33
-10	5/8"	50	56	69	76	34	40	46.33	55
-12	3/4"	70	78	96	106	53	60	72.33	82
-16	1"	94	104	127	141	74	82	100.5	111
-20	1 1/4"	124	138	169	188	75	83	101.5	113
-24	1 1/2	156	173	212	235	79	87	107	118
-32	2"	219	243	296	329	158	175	214	237

Hose End Torque Chart for Flat-Face O-Ring Seal (Steel)					
Size		Torque Specification			
Dash	Frac.	ft-lb		Nm	
		Min.	Max.	Min.	Max.
-4	1/4"	10	12	14	16
-6	3/8"	18	20	24	27
-8	1/2"	32	40	43	54
-10	5/8"	46	56	60	75
-12	3/4"	65	80	90	110
-14	1"	65	80	90	110
-16	1 1/4"	92	105	125	240
-20	1 1/2	125	140	170	190
-24	2"	150	180	200	245

1614

Notes

Section 3 – System Component Identification and Schematics

Table 3.1 Electrical Symbol Chart

 CIRCUITS CROSSING NO CONNECTION	 HOURMETER	 KEY SWITCH	 LIMIT SWITCH N.O.
 CIRCUITS CONNECTED	 LIGHT	 FOOT SWITCH	 LIMIT SWITCH N.O. HELD CLOSED
 BATTERY	 HYDRAULIC VALVE COIL	 TOGGLE SWITCH	 LIMIT SWITCH N.C.
 GROUND	 PROPORTIONAL HYDRAULIC VALVE COIL	 PUSH BUTTON	 LIMIT SWITCH N.C. HELD OPEN
 FUSE	 ELECTRIC MOTOR	 ROTARY SWITCH	 SILICON CONTROLLED RECTIFIER
 CIRCUIT BREAKER	 HORN	 LIMIT SWITCH	 PROXIMITY SWITCH
 VOLT METER	 EMERGENCY STOP BUTTON	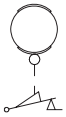 CAM OPERATED LIMIT SWITCH	 PNP TRANSISTOR
 CAPACITOR	RESISTOR	 TILT SWITCH	 NPN TRANSISTOR
 POTENTIOMETER	 LEVEL SENSOR	 SINGLE POLE SINGLE THROWN RELAY	 PRESSURE/ VACUUM SWITCH
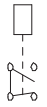 SINGLE POLE DOUBLE THROW RELAY	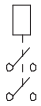 DOUBLE POLE SINGLE THROW RELAY	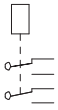 DOUBLE POLE DOUBLE THROW RELAY	 TEMPERATURE SWITCH
TRIPLE POLE DOUBLE THROW RELAY	DIODE	RHEOSTAT	

Table 3.2 Hydraulic Symbol Chart

 LINE CROSSING	 VARIABLE DISPLACEMENT PUMP	 SHUTTLE VALVE	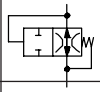 VELOCITY FUSE
 LINE JOINED	 HAND PUMP	 ACCUMULATOR, GAS CHARGED	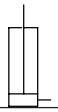 SINGLE ACTING CYLINDER
 HYDRAULIC TANK	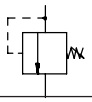 RELIEF VALVE	 CUSHION CYLINDER	 DOUBLE ACTING CYLINDER
 HYDRAULIC FILTER WITH BYPASS	 PRESSURE REDUCING VALVE	 PRESSURE SWITCH	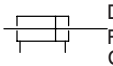 DOUBLE ACTING DOUBLE RODDED CYLINDER
 ELECTRIC MOTOR	 FIXED ORIFICE	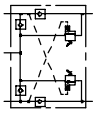 MOTION CONTROL VALVE	 SPRING APPLIED HYDRAULIC RELEASED BRAKE
 ENGINE	 ADJUSTABLE FLOW CONTROL	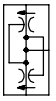 FLOW DIVIDER COMBINER	 BRAKE CYLINDER
 FIXED DISPLACEMENT PUMP	 CHECK VALVE	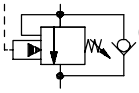 COUNTER BALANCE VALVE	 ROTARY ACTUATOR
 VARIABLE DISPLACEMENT HYDRAULIC MOTOR	 OIL COOLER	 VALVE COIL	 BI DIRECTIONAL HYDRAULIC MOTOR
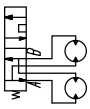 SERIES PARALLEL HYDRAULIC MOTOR	 TWO POSITION TWO WAY NORMALLY CLOSED VALVE	 TWO POSITION THREE WAY VALVE	 THREE POSITION FOUR WAY CLOSED CENTER OPEN PORT
 TWO POSITION TWO WAY NORMALLY OPEN VALVE	 TWO POSITION THREE WAY VALVE	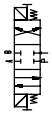 THREE POSITION FOUR WAY CLOSED CENTER CLOSED PORT	
 PRESSURE TRANSDUCER	MAIN LINES Solid	PILOT LINES Dashed	
SERVO			

3.3 AC Cord Color Code

AC Cord Color Code

(Battery Charger and Platform AC Outlet)

Standard Definition	NEC Colors	IEC Colors
Protective Ground/ Protective Earth	Green	Green-Yellow
Neutral	White	Blue
Line, Single Phase	Black	Black or Brown or Grey

Note: Standard colors referenced from IEC 60445:2010, Annex A: Table A.1

3.4 Hydraulic Parts List

Index No.	Skyjack Part No.	Description
2H-13A	103655	VALVE, Control (Lowering)
2B-13A-1	107269	VALVE, Control (Holding)
2B-13A-2	107269	VALVE, Control (Holding)
2H-14B	103655	VALVE, Control (Lift)
2H-17A	114365	VALVE, Control (Large pump dump)
2H-17B	103655	VALVE, Control (Outrigger holding)
2H-18A	103656	VALVE, Control (Small pump dump)
2H-25	102626	VALVE, Control (Quick brake)
2H-30A	112218	VALVE, Control (Free-wheeling)
2H-30A-1	103656	VALVE, Control (Brake dump)
2H-30A-2	103655	VALVE, Control (Brake feed)
2H-86C	104412	VALVE, Control (Hydraulic generator option)
3H-20A	103623	VALVE, Control (Series/Parallel drive)
4H-15B	139256	VALVE, Control (Reverse drive) (includes 4H-16B)
4H-16B	-	VALVE, Control (Forward drive)
4H-23A	153336	VALVE, Control (Right steer) (includes 4H-24A)
4H-24A	-	VALVE, Control (Left steer)
4H-26	153336	VALVE, Control (Front platform extend) (includes 4H-27)
4H-27	-	VALVE, Control (Front platform retract)
4H-26A	153336	VALVE, Control (Rear platform extend) (includes 4H-27A)
4H-27A	-	VALVE, Control (Rear platform retract)
4H-71	153336	VALVE, Control (Left front outrigger retract) (includes 4H-75)
4H-72	153336	VALVE, Control (Right front outrigger retract) (includes 4H-76)
4H-73	153336	VALVE, Control (Right rear outrigger retract) (includes 4H-77)
4H-74	153336	VALVE, Control (Left rear outrigger retract) (includes 4H-78)
4H-75	-	VALVE, Control (Left front outrigger extend)
4H-76	-	VALVE, Control (Right front outrigger extend)
4H-77	-	VALVE, Control (Right rear outrigger extend)
4H-78	-	VALVE, Control (Left rear outrigger extend)
BC1	163175	BRAKE CALIPER
C1	120349	CYLINDER (Lift)
C2	120349	CYLINDER (Lift)
C5	120412	CYLINDER (Disc brake)
C7	120405	CYLINDER (Steer)
C8	107752	CYLINDER (Cushion)
C9	132694	CYLINDER (Left front outrigger)
C10	132694	CYLINDER (Right front outrigger)
C11	132694	CYLINDER (Right rear outrigger)
C12	132694	CYLINDER (Left rear outrigger)
C13	120275	CYLINDER (Front powered platform)
C14	120275	CYLINDER (Rear powered platform)
CBV1	132249	VALVE, Counterbalance (Motion control)
CBV1	N/A	VALVE, Counterbalance (Motion control)
CBV2	-	VALVE, Counterbalance (Motion control)
CV1	104624	VALVE, Check (Small pump)
CV2	104624	VALVE, Check (Large pump)
CV3	104624	VALVE, Check (Lift)

3.4 Hydraulic Parts List

Index No.	Skyjack Part No.	Description
CV4	104415	VALVE, Check (Left front outrigger)
CV5	104415	VALVE, Check (Right front outrigger)
CV6	104415	VALVE, Check (Right rear outrigger)
CV7	104415	VALVE, Check (Left rear outrigger)
CV11	N/A	VALVE, Check (Motion control)
CV12	-	VALVE, Check (Motion control)
CV13	-	VALVE, Check (Motion control)
CV14	-	VALVE, Check (Motion control)
CV15	104567	VALVE, Check (Brake holding)
DCM1	300248	DC Motor, 12 Volt
F1	109568	RETURN FILTER ASSEMBLY
	104254	• ELEMENT, Filter
GM1	113875	MOTOR/PUMP with flow control (Hydraulic generator option)
HP2	110652	HAND PUMP, Brake release
M1	109311	MOTOR, Center drive hydraulic
MB1	162838	BLOCK, Manifold (Main)
MB2	103137	BLOCK, Manifold (Emergency lowering)
MB3	106688	BLOCK, Manifold (Holding valve)
MB4	106688	BLOCK, Manifold (Holding valve)
MB7	125430	BLOCK, Manifold (Lift)
MB9	113494	BLOCK, Manifold (Controlled lowering)
MB10	163026	BLOCK, Manifold (Quick brake)
MB11	111970	BLOCK, Manifold (Outrigger)
MB12	103137	BLOCK, Manifold (Hydraulic generator option)
MB13	111290	BLOCK, Manifold (Front powered platform)
MB14	111291	BLOCK, Manifold (Rear powered platform)
MB15	103615	BLOCK, Manifold (Free-wheeling)
MB16	158529	BLOCK, Manifold (Motion control)
MC1	132244	MOTION CONTROL ASSEMBLY
O2	125011	ORIFICE (0.159” diameter) (Lift cylinder)
O3	141518	ORIFICE (0.031” diameter) (Brake caliper)
O4	116725	ORIFICE (0.067” diameter) (Emergency lowering)
O5	125012	ORIFICE (0.110” diameter) (Controlled lowering)
O7	125244	ORIFICE (0.120” diameter) (Lift) (Model 8841)
OC1	114284	OIL COOLER (Option)
P1	110460	PUMP, Hydraulic (0.488/0.854)
P3	113173	PUMP, Hydraulic (1.2 gpm) (Powered platform)
QD1	122419	QUICK DISCONNECT (System pressure)
R1	104534	VALVE, Relief (System)
R2	104534	VALVE, Relief (Lift)
R3	106557	VALVE, Relief (Lift cylinder)
R4	106557	VALVE, Relief (Lift cylinder)
R8	113286	VALVE, Relief (Set at 500psi) (Powered platform)
V1	107271	VALVE, Emergency lowering
V2	113556	VALVE, Controlled lowering
V6	113752	VALVE, Brake release (Auto reset)

3.5 Electrical Parts List

RELAY DIAGRAM

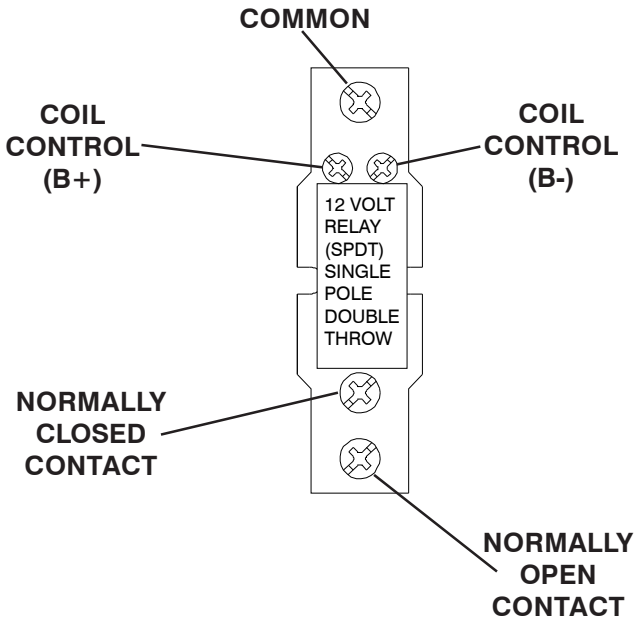

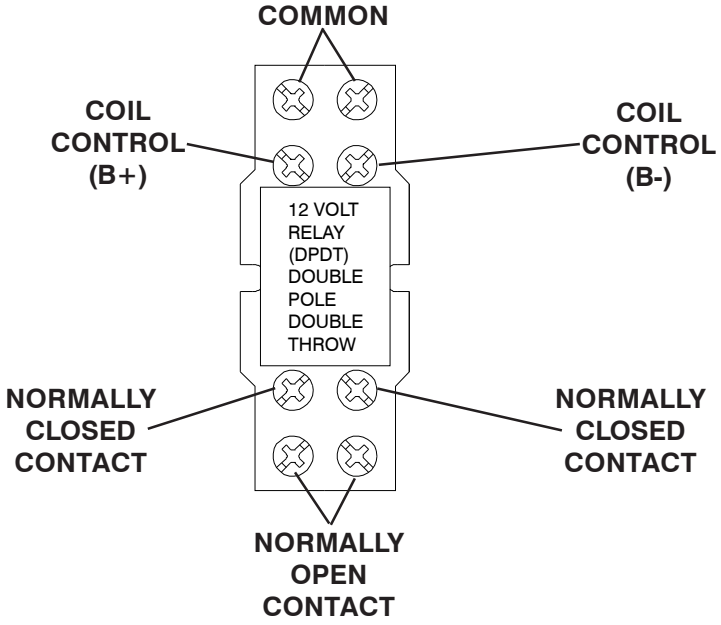

3.5 Electrical Parts List

Index No.	Skyjack Part No.	Description
1TD	103207	RELAY, 12 Volt DPDT (Drive time delay)
2D37	147131	SOLENOID, Stop (Diesel engine)
9CR1	111787	CONTACTOR, 12 Volt (Powered extension platform)
9CR2	127131	RELAY, 12 Volt (Outrigger enable)
9CR3	127131	RELAY, 12 Volt (Outrigger enable proof)
10ACR1	103207	RELAY, 12 Volt DPDT (Engine protection relay)
10ACR2	127035	RELAY, 12 Volt DPDT (Oil cooler)
10BCR1	103316	RELAY, 12 Volt SPDT (Engine on)
12BCR	127035	RELAY, 12 Volt (Controller enable)
13CR	103316	RELAY, 12 Volt SPDT (Down)
14CR	103316	RELAY, 12 Volt SPDT (Up)
15CR	103316	RELAY, 12 Volt DPDT (Reverse drive)
16CR	103316	RELAY, 12 Volt DPDT (Forward drive)
17CR	103316	RELAY, 12 Volt SPDT (2nd speed/large pump)
17ACR	103316	RELAY, 12 Volt SPDT (Small pump)
17DCR	127131	RELAY, 12 Volt SPDT (Outrigger trigger)
18CR	103316	RELAY, 12 Volt SPDT (3rd speed)
20CR	103316	RELAY, 12 Volt SPDT (Series/parallel drive)
23CR	103316	RELAY, 12 Volt SPDT (Right steer)
24CR	103316	RELAY, 12 Volt SPDT (Left steer)
28CR	103207	RELAY, 12 Volt DPDT (Tilt switch)
30CR	103316	RELAY, 12 Volt SPDT (Brake)
31ACR	127035	RELAY, 12 Volt (Kubota diesel engine glow plug)
31CR	103316	RELAY, 12 Volt SPDT (Glow plug)
2CR	103207	RELAY, 12 Volt DPDT (Engine start)
32ACR	147125	SOLENOID (engine starter)
34BCR	103316	RELAY, 12 Volt SPDT (Throttle)
35CR	103207	RELAY, 12 Volt DPDT (Tilt override)
49CR	103316	RELAY, 12 Volt SPDT (Horn)
56CR	143805	RELAY, 12V (20A/35A) (GM fuel pump)
61CR	127131	RELAY, 12 Volt DPDT (Outrigger)
65CR	127131	RELAY, 12 Volt SPDT (Outrigger lift enable)
86ACR	103316	RELAY, 12 Volt SPDT (Hydraulic generator)
86BCR	103207	RELAY, 12 Volt DPDT (Hydraulic generator stop)
99CR	300242	SOLENOID, 12 Volt motor (Powered extension platform)
2002CR	143805	RELAY, 12 Volt (20A/35A) (Power unit)
2H-13A	103613	COIL, 12 Volt (Lowering valve)
2H-13A-1	104410	COIL, 12 Volt (Lift cylinder holding valve)
2H-13A-2	104410	COIL, 12 Volt (Lift cylinder holding valve)
2H-14B	103613	COIL, 12 Volt (Lift valve)
2H-17A	106272	COIL, 12 Volt (Large pump dump valve)
2H-17B	103613	COIL, 12 Volt (Outrigger holding valve)
2H-18A	103613	COIL, 12 Volt (Small pump dump valve)
2H-25	103613	COIL, 12 Volt (Brake valve)
H-30A	103613	COIL, 12 Volt (Free-wheeling valve)
2H-30A-1	103613	COIL, 12 Volt (Brake dump valve)

3.5 Electrical Parts List

Index No.	Skyjack Part No.	Description
2H-30A-2	103613	COIL, 12 Volt (Brake feed valve)
2H-86C	106272	COIL, 12 Volt (Hydraulic generator valve)
3H-20A	103613	COIL, 12 Volt (Series/Parallel drive valve)
4H-15B	128321	COIL, 12 Volt (Reverse drive valve)
4H-16B	128321	COIL, 12 Volt (Forward drive valve)
4H-23A	153337	COIL, 12 Volt (Right steer valve)
4H-24A	153337	COIL, 12 Volt (Left steer valve)
4H-26	153337	COIL, 12 Volt (Front powered extension platform extend valve)
4H-27	153337	COIL, 12 Volt (Front powered extension platform retract valve)
4H-26A	153337	COIL, 12 Volt (Rear powered extension platform extend valve)
4H-27A	153337	COIL, 12 Volt (Rear powered extension platform retract valve)
4H-71	153337	COIL, 12 Volt (Left front outrigger retract)
4H-72	153337	COIL, 12 Volt (Right front outrigger retract)
4H-73	153337	COIL, 12 Volt (Right rear outrigger retract)
4H-74	153337	COIL, 12 Volt (Left rear outrigger retract)
4H-75	153337	COIL, 12 Volt (Left front outrigger extend)
4H-76	153337	COIL, 12 Volt (Right front outrigger extend)
4H-77	153337	COIL, 12 Volt (Right rear outrigger extend)
4H-78	153337	COIL, 12 Volt (Left rear outrigger extend)
B1	103295	BATTERY, 12 Volt
BP-29	103056	BEEPER, 12 Volt
BP1	133441	BRAKE PACK
CAP1	103319	CAPACITOR, 50 Volt (1000MFD)
CAP2	117679	CAPACITOR, 35 Volt (3300MFD)
CB1	117326	BREAKER, Circuit (20 Amp)
CB3	117326	BREAKER, Circuit (20 Amp)
CB4	117325	BREAKER, Circuit (15 Amp) (Hydraulic generator option)
CRD1	115283	CABLE ASSEMBLY (Platform)
CRD2	115278	CABLE ASSEMBLY (Scissor) (Model 8831)
	115279	CABLE ASSEMBLY (Scissor) (Model 8841)
CRD3	115284	CABLE ASSEMBLY (Electrical panel)
DA1	127688	DIODE ASSEMBLY (D28A)
DA2	129434	DIODE ASSEMBLY (D30/D30A)
DA3	127684	DIODE ASSEMBLY (D44)
DA6	127685	DIODE ASSEMBLY (D86C-1) (Hydraulic generator option)
DA7	127926	DIODE ASSEMBLY (D86C-2) (Hydraulic generator option)
DA8	129303	DIODE ASSEMBLY (D14B-3) (Hydraulic generator option)
DA9	132807	DIODE ASSEMBLY (D17A, D18A)
DA10	129213	DIODE ASSEMBLY (D15A-2, D16A-2)
DA12	104313	DIODE ASSEMBLY (D15A-1 thru D24A)
DXX	102921	DIODE
DCM1	300248	MOTOR, 12 Volt (Powered extension platform)
EGP1	KUBOTA	GLOW PLUG, Engine (Diesel fuel engine)
F	115384	FAN, Oil cooler (Option)
F2	111282	FUSE (100 Amp) (Powered extension platform)

3.5 Electrical Parts List

Index No.	Skyjack Part No.	Description
F4	119469	FUSE (200 Amp) (Inverter option)
F5	120658	FUSE (10 Amp) (Powered extension platform)
FL-22	126677	FLASHING LIGHT (12 Volt)
FL-29	103743	FLASHER
G	136101	ALTERNATOR (Dual fuel engine)
	137138	ALTERNATOR (Diesel fuel engine)
GPL1	132884	LIGHT, Glow plug indicator (Diesel fuel engine)
GPT1	132883	TIMER, Glow plug (Diesel fuel engine)
H1	146652	HORN, 12 Volt
HTS-34A	106370	SOLENOID, High throttle (Diesel fuel engine)
INV1	123629	INVERTER, 1500 Watt
LED1	147229	POWER INDICATOR LIGHT (Platform control console)
LED2	147229	POWER INDICATOR LIGHT (Base control console)
LED3	147229	POWER INDICATOR LIGHT (Platform control console)
LS4	115658	LIMIT SWITCH (End-of-stroke)
LS5	119296	LIMIT SWITCH (High drive cut-out/tilt-override)
LS61	115658	LIMIT SWITCH (Left front outrigger extend)
LS62	115658	LIMIT SWITCH (Right front outrigger extend)
LS63	115658	LIMIT SWITCH (Right rear outrigger extend)
LS64	115658	LIMIT SWITCH (Left rear outrigger extend)
LS65	115658	LIMIT SWITCH (Left front outrigger retract)
LS66	115658	LIMIT SWITCH (Right front outrigger retract)
LS67	115658	LIMIT SWITCH (Right rear outrigger retract)
LS68	115658	LIMIT SWITCH (Left rear outrigger retract)
M	159216	MOTOR, Engine starter (Dual fuel engine)
	147125	MOTOR, Engine starter (Diesel fuel engine)
OCM1	132804	MODULE, Auto-level control (Outrigger)
OL1	133133	LIGHT, Indicator (Outrigger)
OPS1	102838	SWITCH, Oil pressure (Diesel fuel engine)
	102838	SWITCH, Oil pressure (Dual fuel engine)
RA1	--	ACTUATOR, Throttle body (Dual fuel engine)
RL-22	107098	LIGHT, Rotating amber beacon (Option)
RL-29	107098	BEACON, Rotating Amber (Option)
S1	119726	SWITCH, Main power disconnect
S2	147054	N.O. CONTACT (Base - up/off/down switch)
S3	147054	N.O. CONTACT (Platform - off/lift/drive select key switch)
	147053	N.C. CONTACT (Platform - off/lift/drive select key switch)
S4	147053	N.C. CONTACT (Platform - emergency stop switch)
S5	147054	N.O. CONTACT (Platform - up/down switch)
S6	147053	N.C. CONTACT (Base - emergency stop switch)
S7	132537	DRIVE/STEER CONTROLLER ASSEMBLY
S7-1	122869	• SWITCH (2nd speed)
S7-2	122877	• SWITCH (Right steer)
S7-3	122877	• SWITCH (Left steer)
S7-4	122869	• SWITCH (Reverse drive)
S7-5	122869	• SWITCH (Forward drive)

3.5 Electrical Parts List

Index No.	Skyjack Part No.	Qty.	Description
S7-6	122869	1	• SWITCH (3rd speed)
S7-7	122872	1	• SWITCH (Enable pushbutton)
8	147054	1	N.O. CONTACT (Platform - Horn pushbutton)
S9	147054	1	N.O. CONTACT (Platform - Lift enable switch)
S9A	102853	1	SWITCH, Toggle (Outrigger enable)
S9B	127132	1	SWITCH, Toggle (Outrigger enable)
S10	147054	1	N.O. CONTACT (Base - enable switch)
S11	102853	1	SWITCH, Toggle (Front powered platform extend/retract)
S11A	102853	1	SWITCH, Toggle (Rear powered platform extend/retract)
S12	102853	1	SWITCH, Toggle (Hydraulic generator option)
S13	147054	1	N.O. CONTACT (Platform - choke/glow plug switch)
S14	147054	1	N.O. CONTACT (Platform - low/high throttle switch)
S15	147054	1	N.O. CONTACT (Platform - engine start switch)
S20	102853	1	SWITCH, Toggle (Platform - left front outrigger extend/retract)
S21	102853	1	SWITCH, Toggle (Platform - right front outrigger extend/retract)
S22	102853	1	SWITCH, Toggle (Platform - right rear outrigger extend/retract)
S23	102853	1	SWITCH, Toggle (Platform - left rear outrigger extend/retract)
S20A	127132	1	SWITCH, Toggle (Base - left front outrigger extend/retract)
S21A	127132	1	SWITCH, Toggle (Base - right front outrigger extend/retract)
S22A	127132	1	SWITCH, Toggle (Base - right rear outrigger extend/retract)
S23A	127132	1	SWITCH, Toggle (Base - left rear outrigger extend/retract)
S24	102853	1	SWITCH, Toggle (Platform - outrigger auto-level)
S29	147054	1	N.O. CONTACT (Platform - low/high range)
S30	124446	1	SWITCH, Toggle (Engine panel - engine off/on)
S31	102853	1	SWITCH, Toggle (Kubota engine panel - glow plug)
S33	115574	1	SWITCH, Toggle (GM - gas/propane fuel select)
S34	102853	1	SWITCH, Toggle (Front powered platform enable)
S34A	102853	1	SWITCH, Toggle (Rear powered platform enable)
S41	114373	1	SWITCH, Toggle (Platform - high/low torque)
TPS1	113400	1	TEMPERATURE SWITCH, Engine (Dual fuel engine)
	113400	1	TEMPERATURE SWITCH, Engine (Diesel engine)
TS1	146661	1	TILT SWITCH ASSEMBLY
TT	103336	1	HOUR METER

3.6 Platform Control Console Diagram with All Options (ANSI/CSA)

CONTROL BOX HARNESS		PIN # - FUNCTION	JOYSTICK HARNESS	
24	BLUE/BLACK	PIN 1 - LEFT	24	WHITE/RED
12	BROWN/RED	PIN 2 - JOYSTICK VS+	12	WHITE/BLACK
23	BLACK/WHITE	PIN 3 - RIGHT	23	WHITE
16	WHITE / BLACK	PIN 4 - FORWARD	16	YELLOW
12A	BROWN/RED	PIN 5 - STEERING VS+	12A	WHITE/GREEN
15	BLUE	PIN 6 - REVERSE	15	GREY
19	ORANGE/BLACK	PIN 7 - 2nd SPEED	19	BROWN
12A	BROWN/RED	PIN 8 - ENABLE VS+	12A	WHITE/BLUE
18B	RED/BLACK	PIN 9 - 3rd SPEED	18B	RED/BLACK

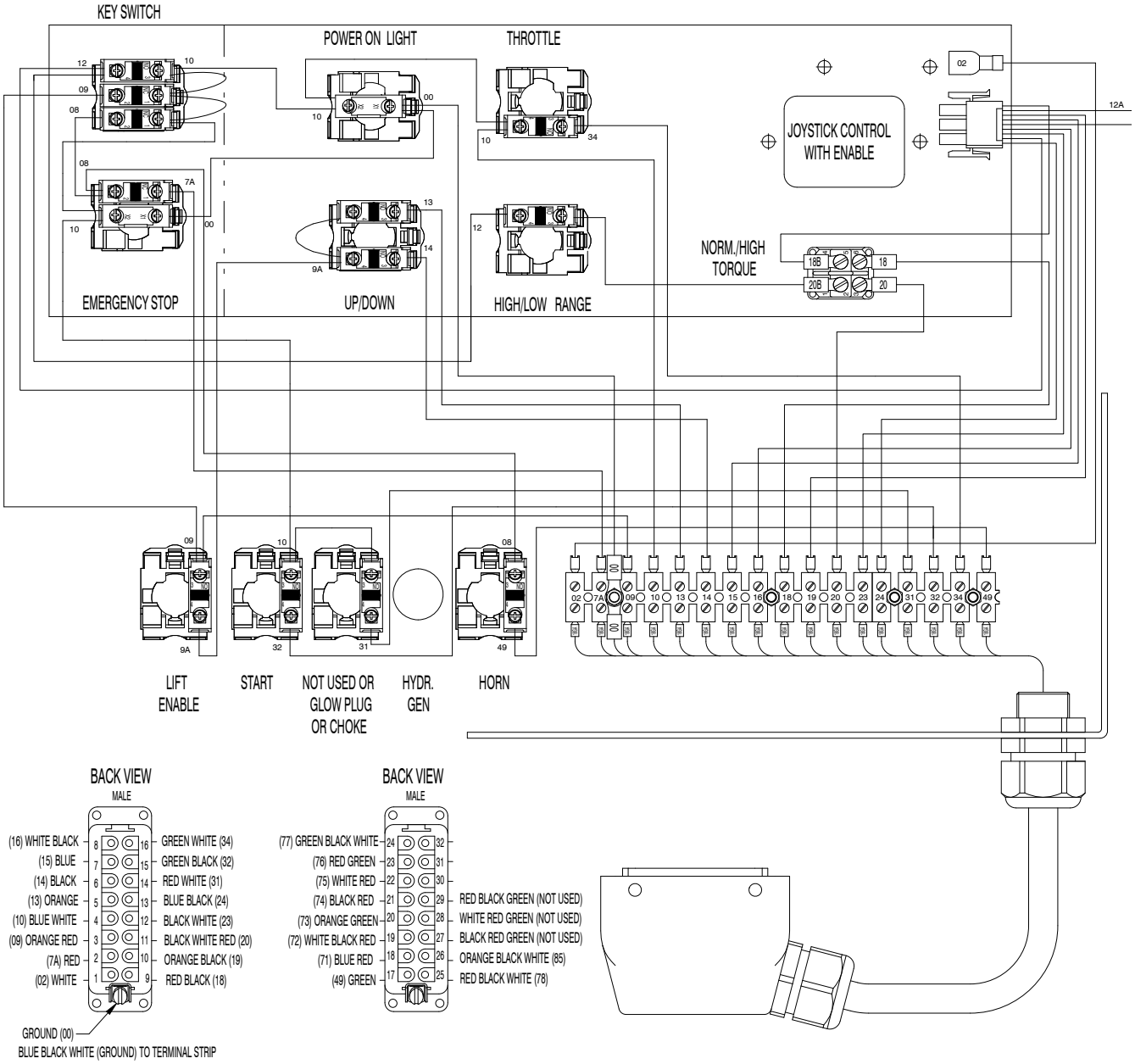

M147234AE

3.7 Control Cable Assemblies Diagram

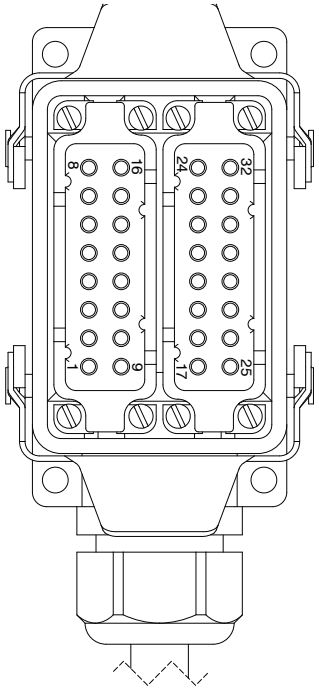

INSERTS 1-16

PIN 1 - WHITE (02)
PIN 2 - RED (7A)
PIN 3 - ORANGE RED (09)
PIN 4 - BLUE WHITE (10)
PIN 5 - ORANGE (13)
PIN 6 - BLACK (14)
PIN 7 - BLUE (15)
PIN 8 - WHITE BLACK (16)
PIN 9 - RED BLACK (18)
PIN 10 - ORANGE BLACK (19)
PIN 11 - BLACK WHITE RED (20)
PIN 12 - BLACK WHITE (23)
PIN 13 - BLUE BLACK (24)
PIN 14 - RED WHITE (31)
PIN 15 - GREEN BLACK (32)
PIN 16 - GREEN WHITE (34)
GROUND TERMINAL - BLUE BLACK WHITE

INSERTS: 17-32

PIN 17 - GREEN (49)
PIN 18 - BLUE RED (71)
PIN 19 - WHITE BLACK RED (72)
PIN 20 - ORANGE GREEN (73)
PIN 21 - BLACK RED (74)
PIN 22 - WHITE RED (75)
PIN 23 - RED GREEN (76)
PIN 24 - GREEN BLACK WHITE (77)
PIN 25 - RED BLACK WHITE (78)
PIN 26 - ORANGE BLACK WHITE (85)
PIN 27 - BLACK RED GREEN (60)
PIN 28 - WHITE RED GREEN (10D)
PIN 29 - RED BLACK GREEN (7C)
PIN 30 - EMPTY
PIN 31 - EMPTY
PIN 32 - EMPTY
GROUND TERMINAL - EMPTY

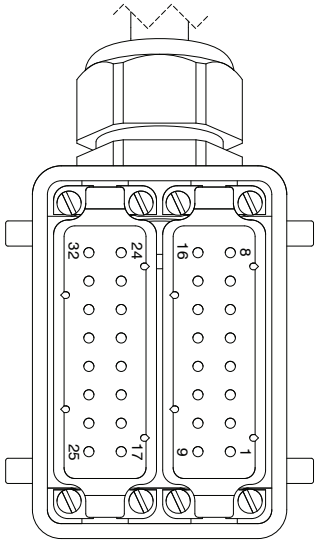

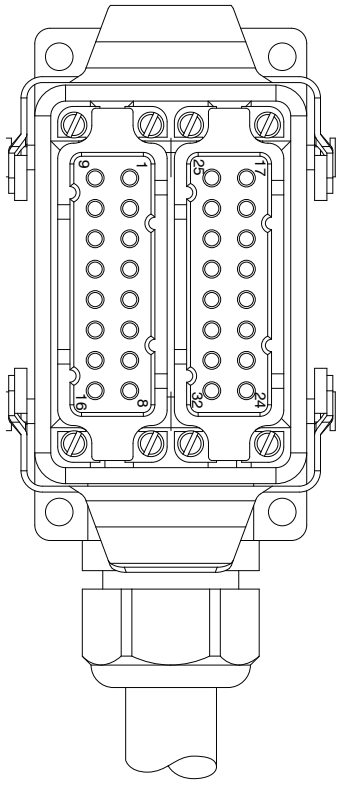

TO CONTROL BOX

TO CONTROL BOX

BACK VIEW

FEMALE

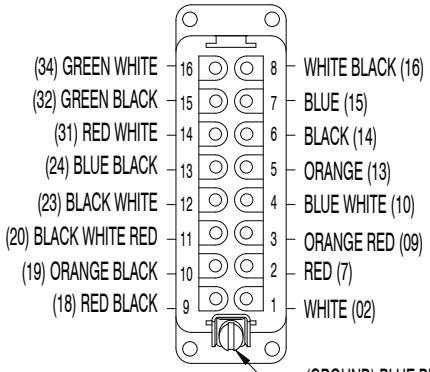

(GROUND) BLUE BLACK WHITE TO (00) GROUND

BACK VIEW

FEMALE

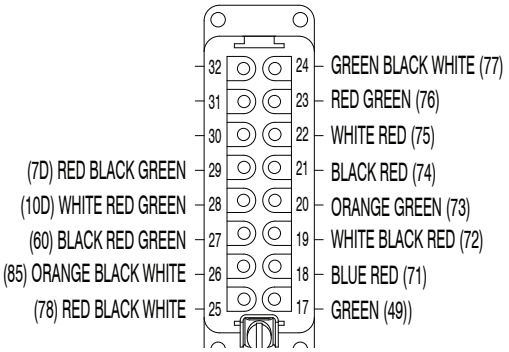

M115279AD_M115284AE

3.8 Outrigger/Hydraulic Generator Control Console Wiring

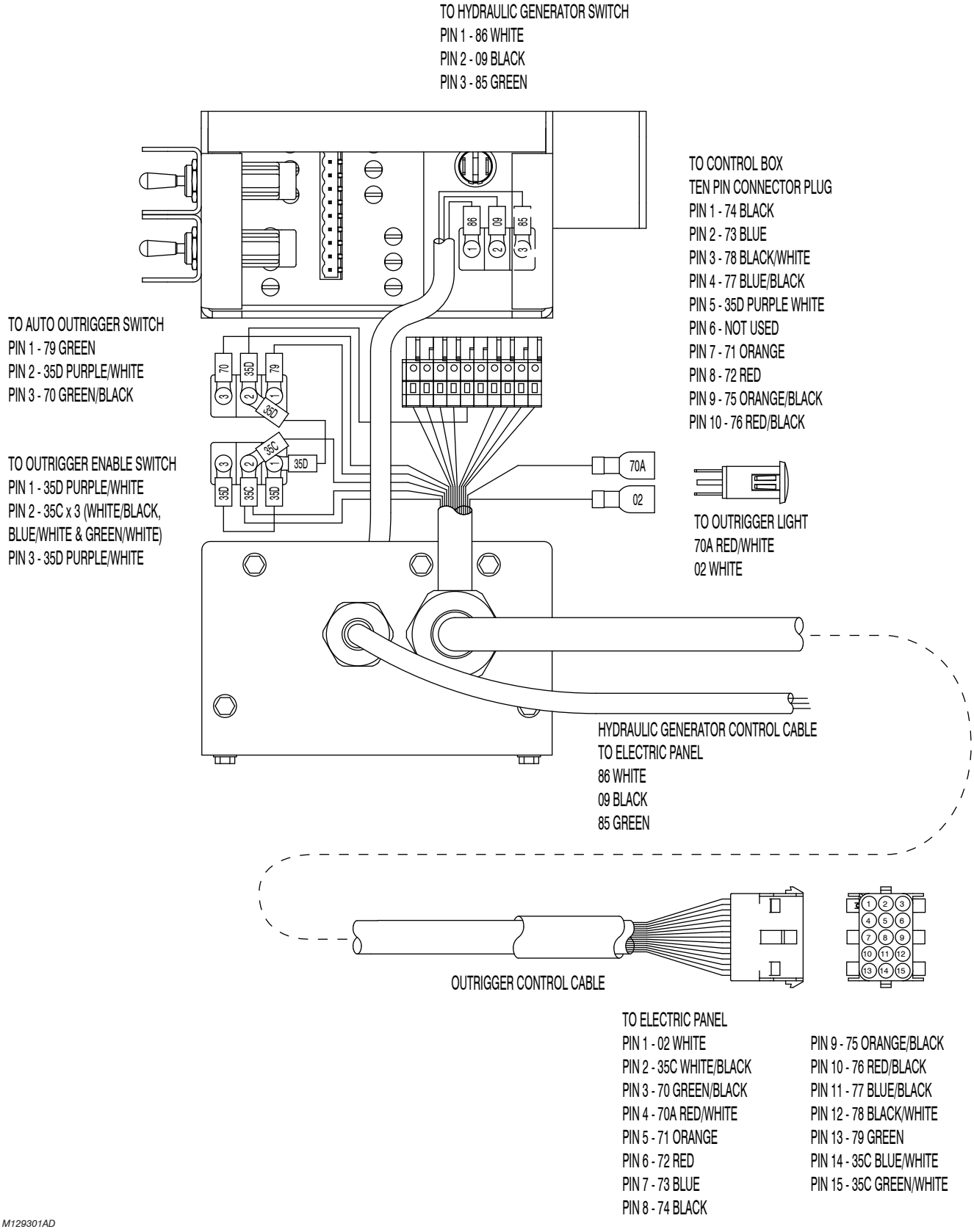

M129301AD

3.9 Hydraulic Schematic

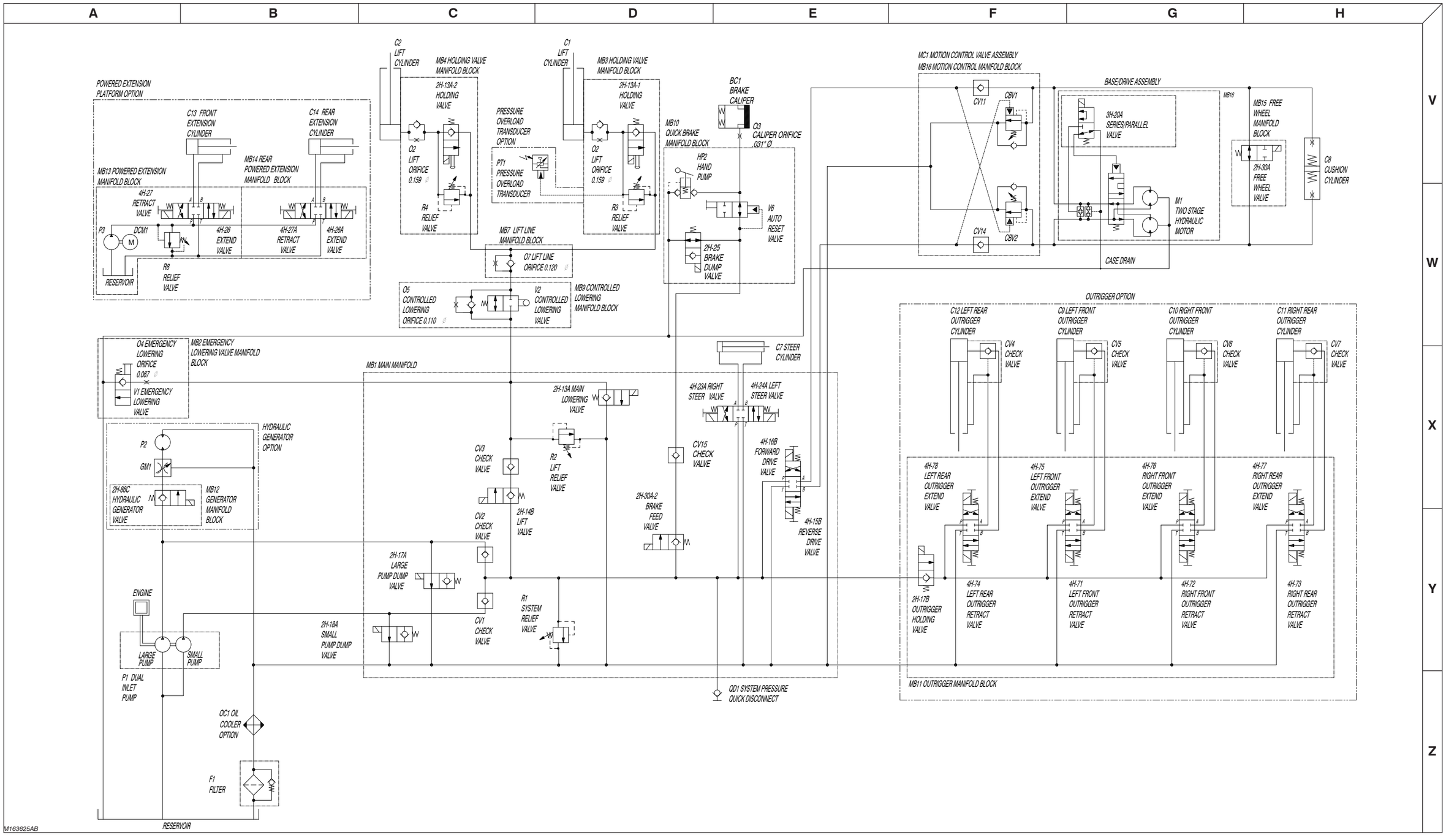

3.10 Main Manifold Components and Port Identifications

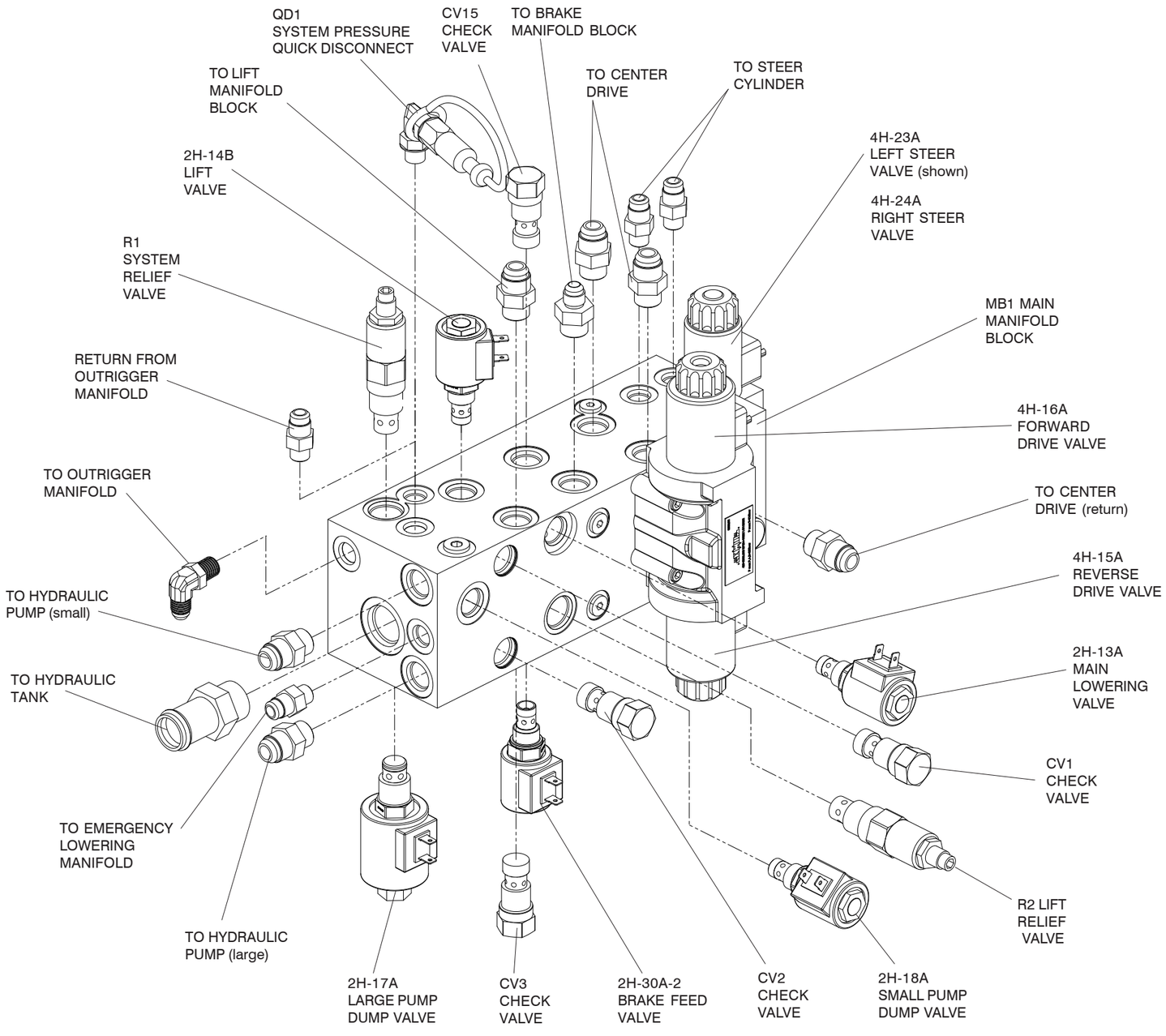

M163219AA_1

3.11 Hydraulic Manifold Components and Port Identifications

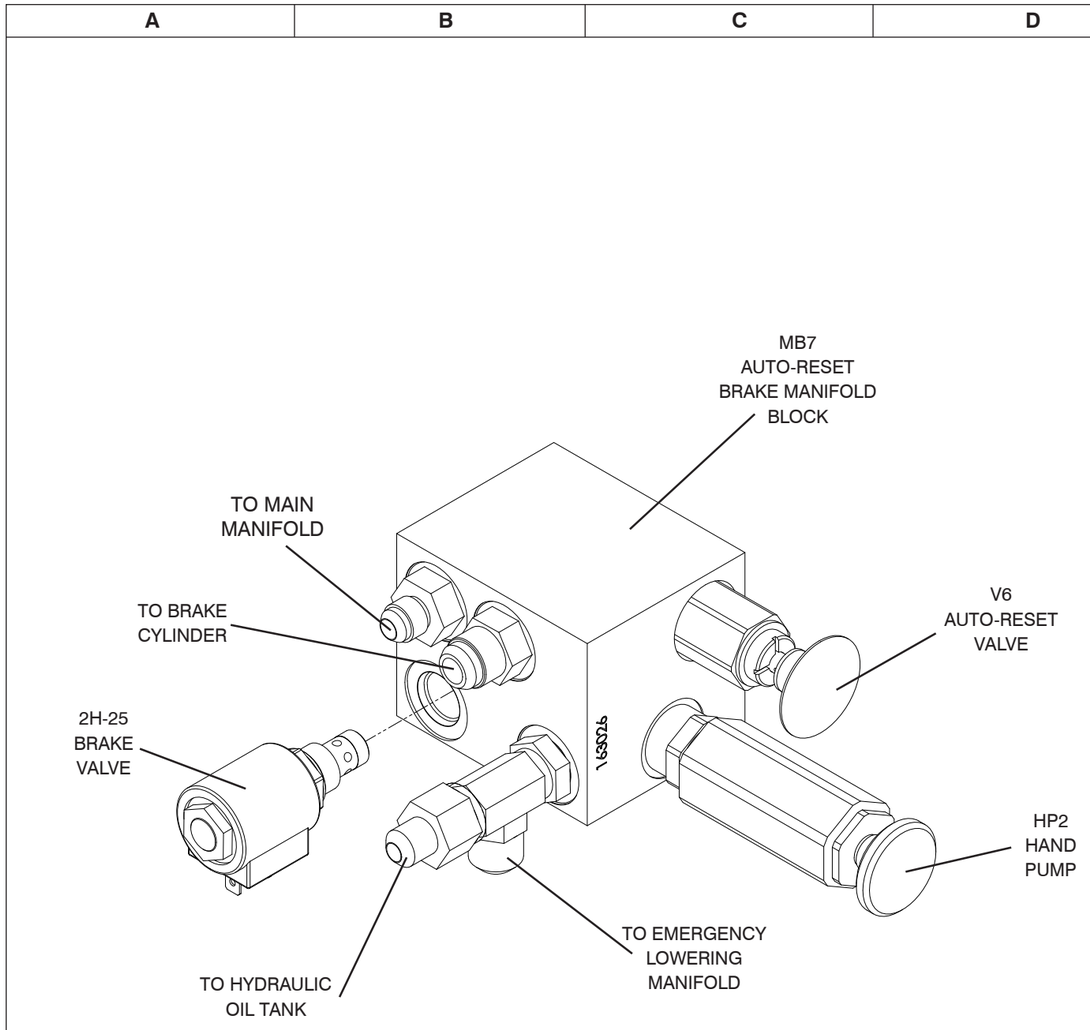

AUTO-RESET BRAKE MANIFOLD

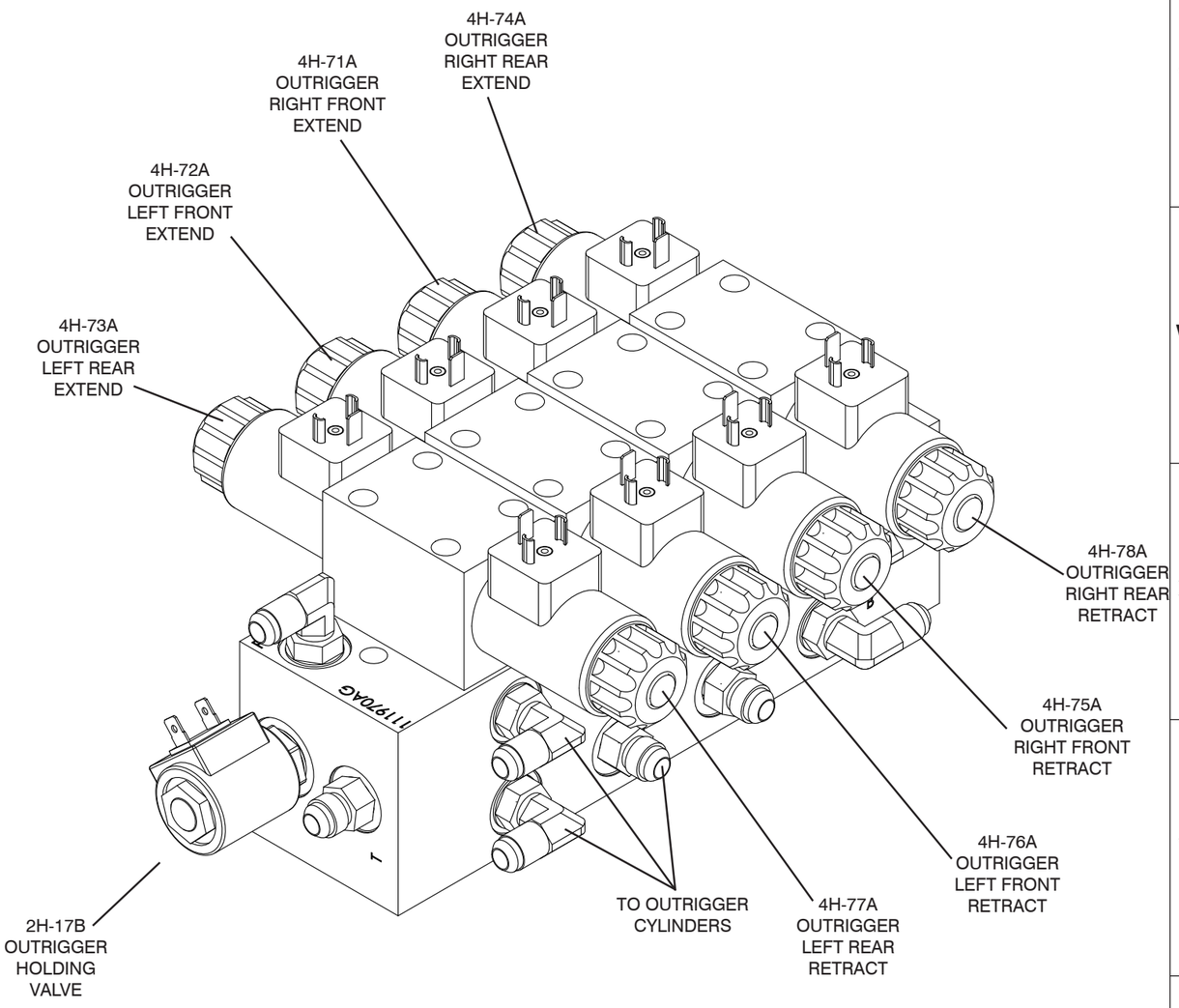

OUTRIGGER MANIFOLD

M163254AA_1, M133122AE

3.12 Main Manifold Wiring Diagram (ANSI/CSA)

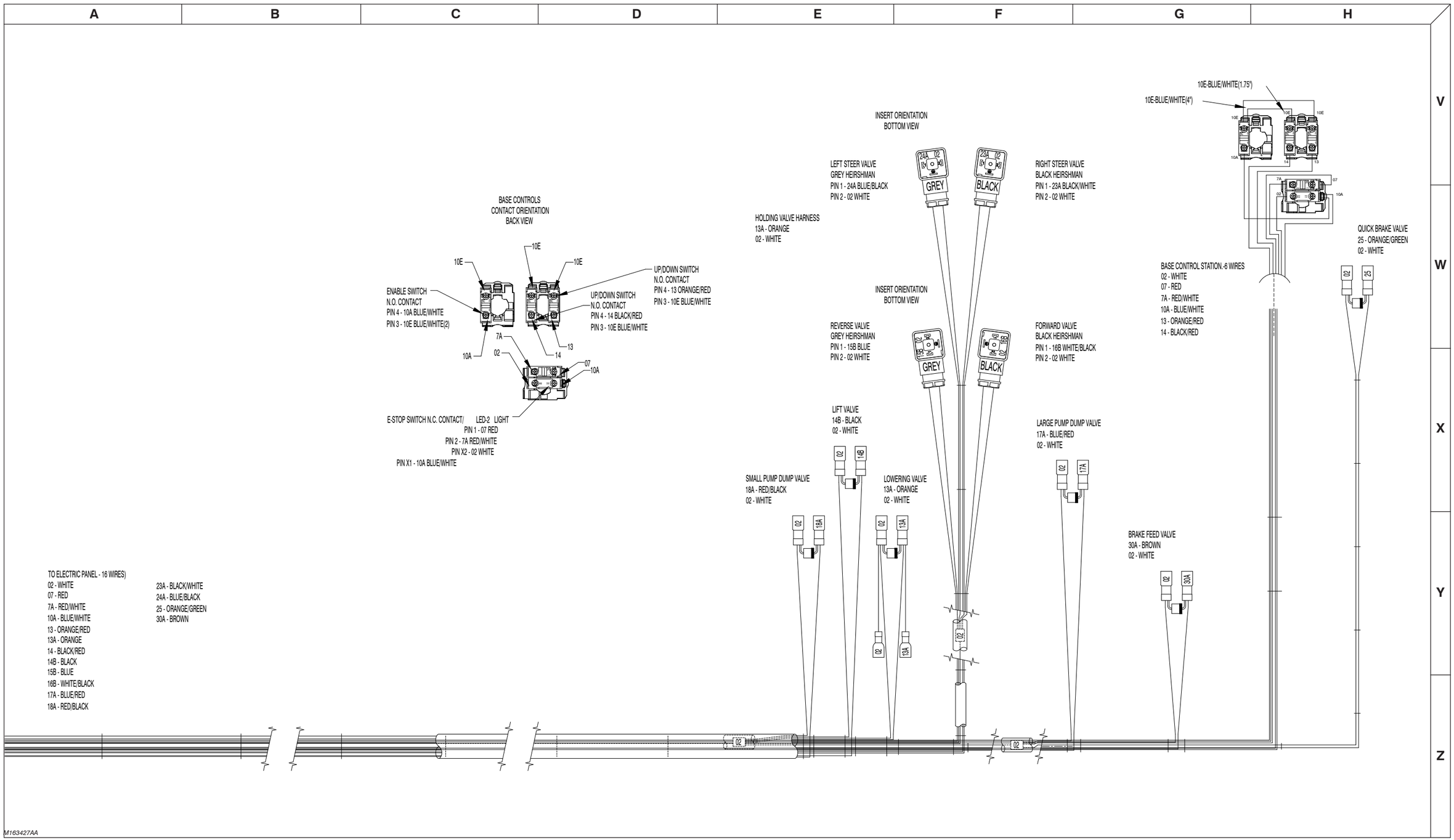

3.13 Horn, Light, Beeper Wiring Diagram (ANSI/CSA)

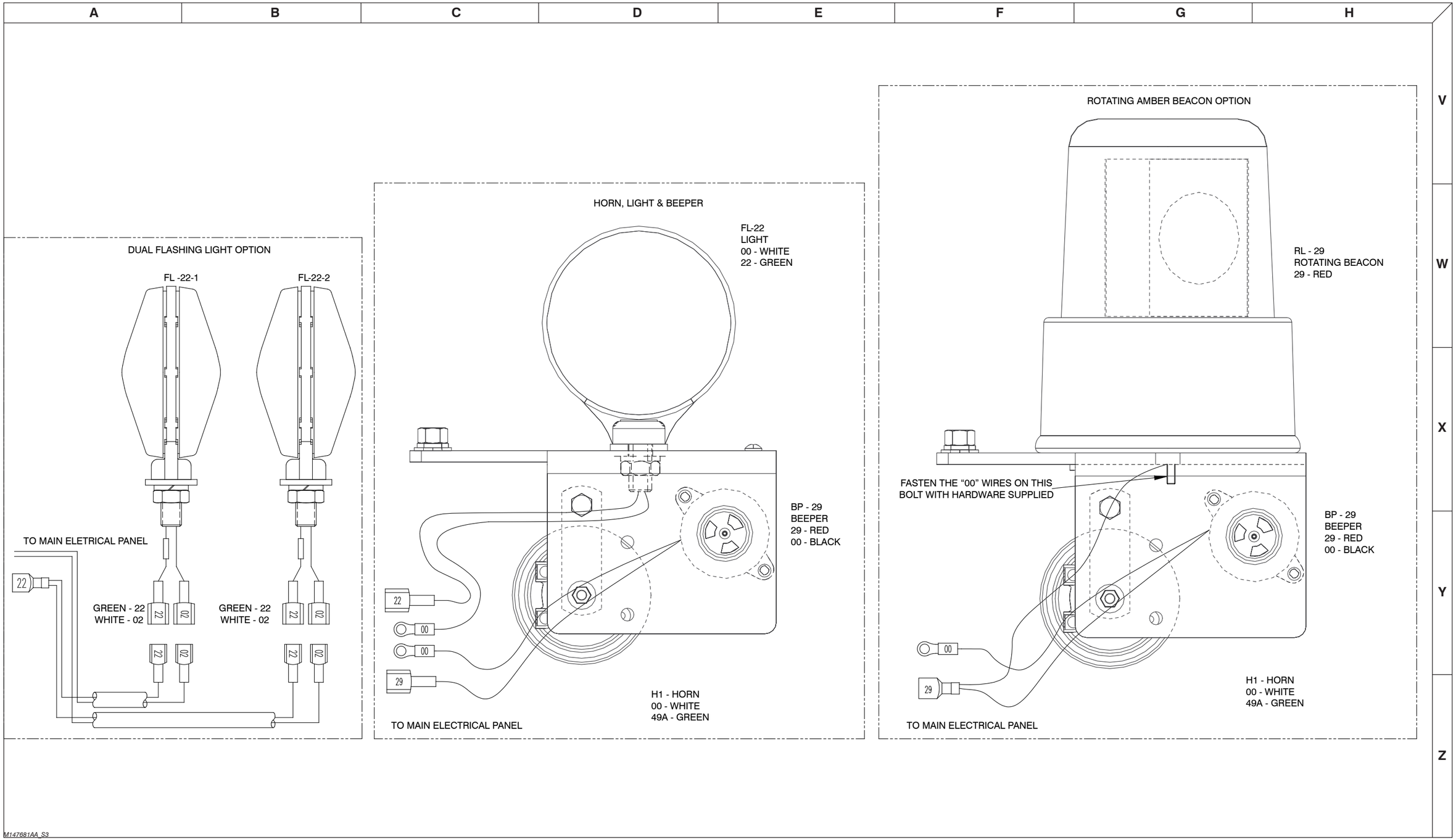

M147681AA_S3

3.14 Powered Extension Platform - Electrical Connection Diagram

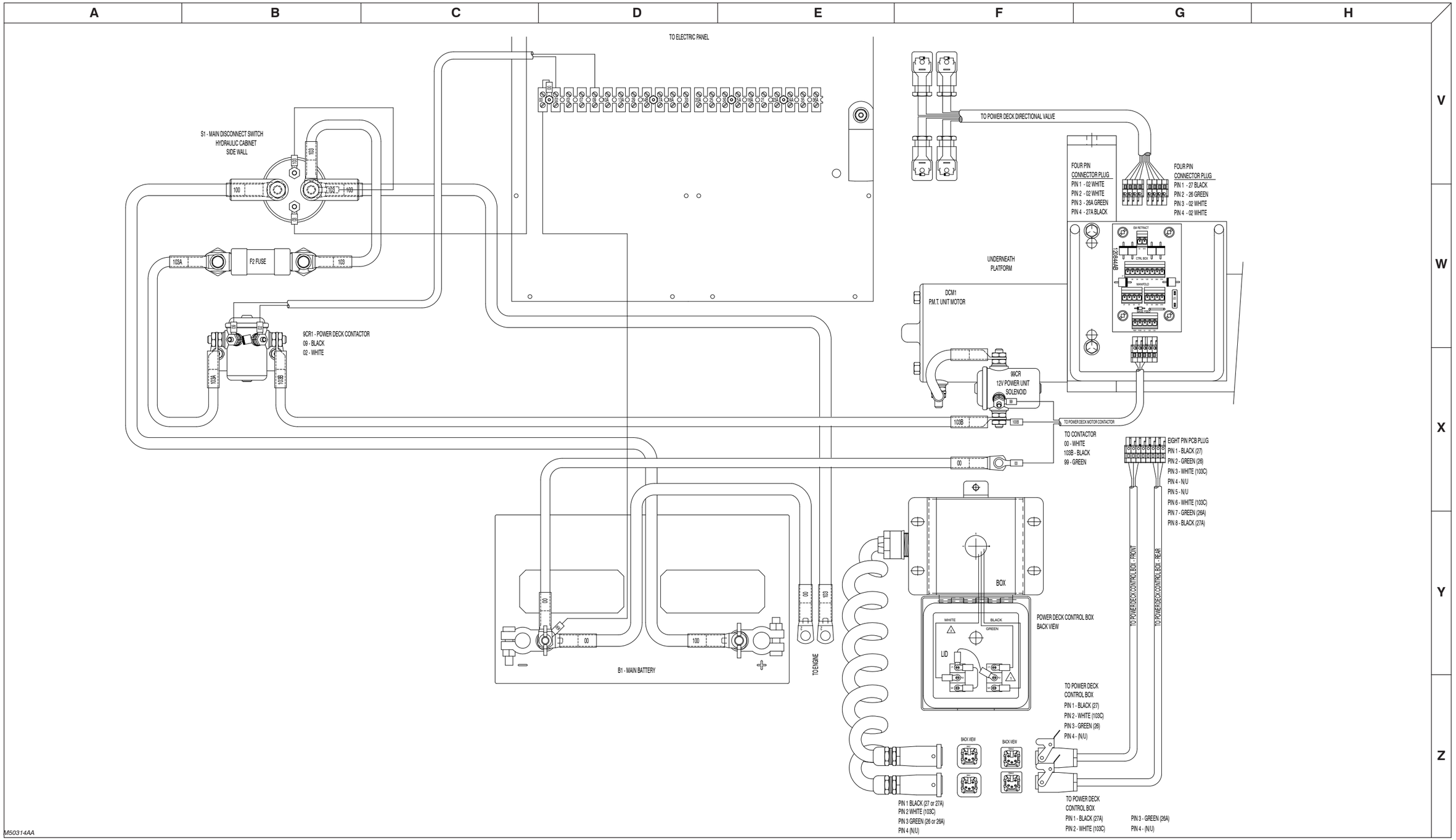

3.15 Electrical Panel Diagram - 12 kW Generator Modification (ANSI/CSA)

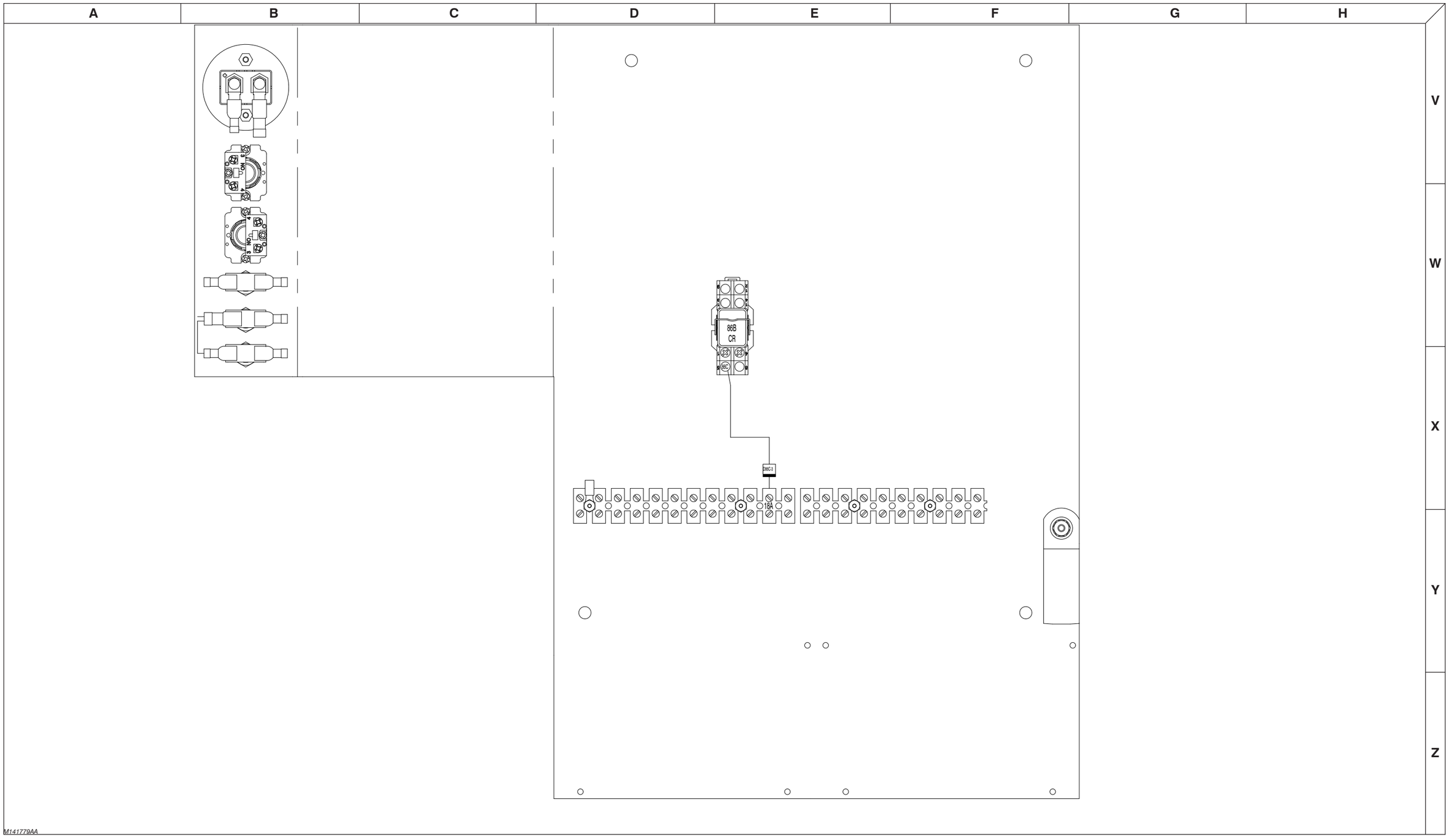

3.16 12 kW Generator Hydraulic and Electric Wiring Schematics (ANSI/CSA)

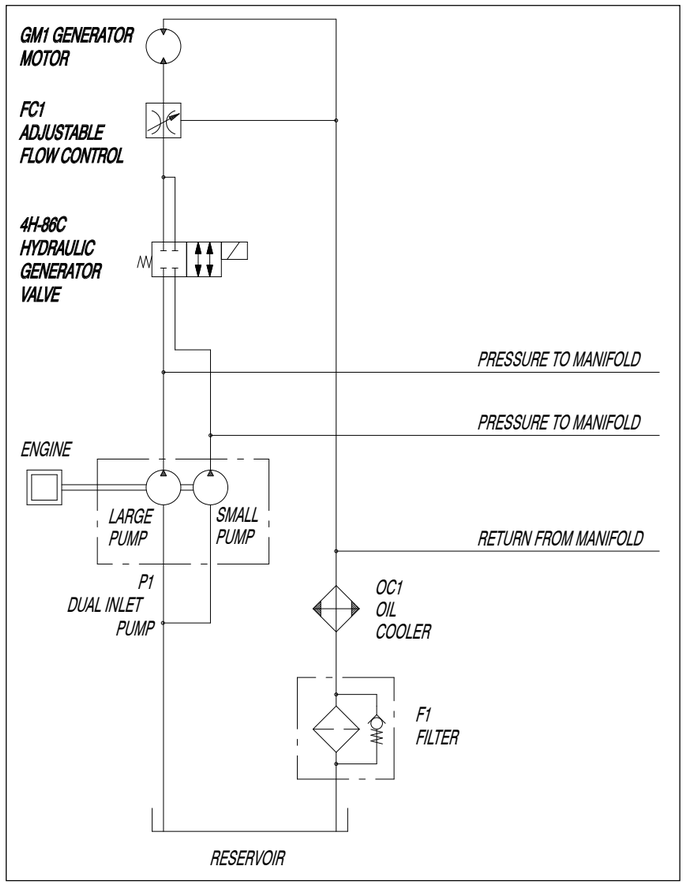

HYDRAULIC SCHEMATIC

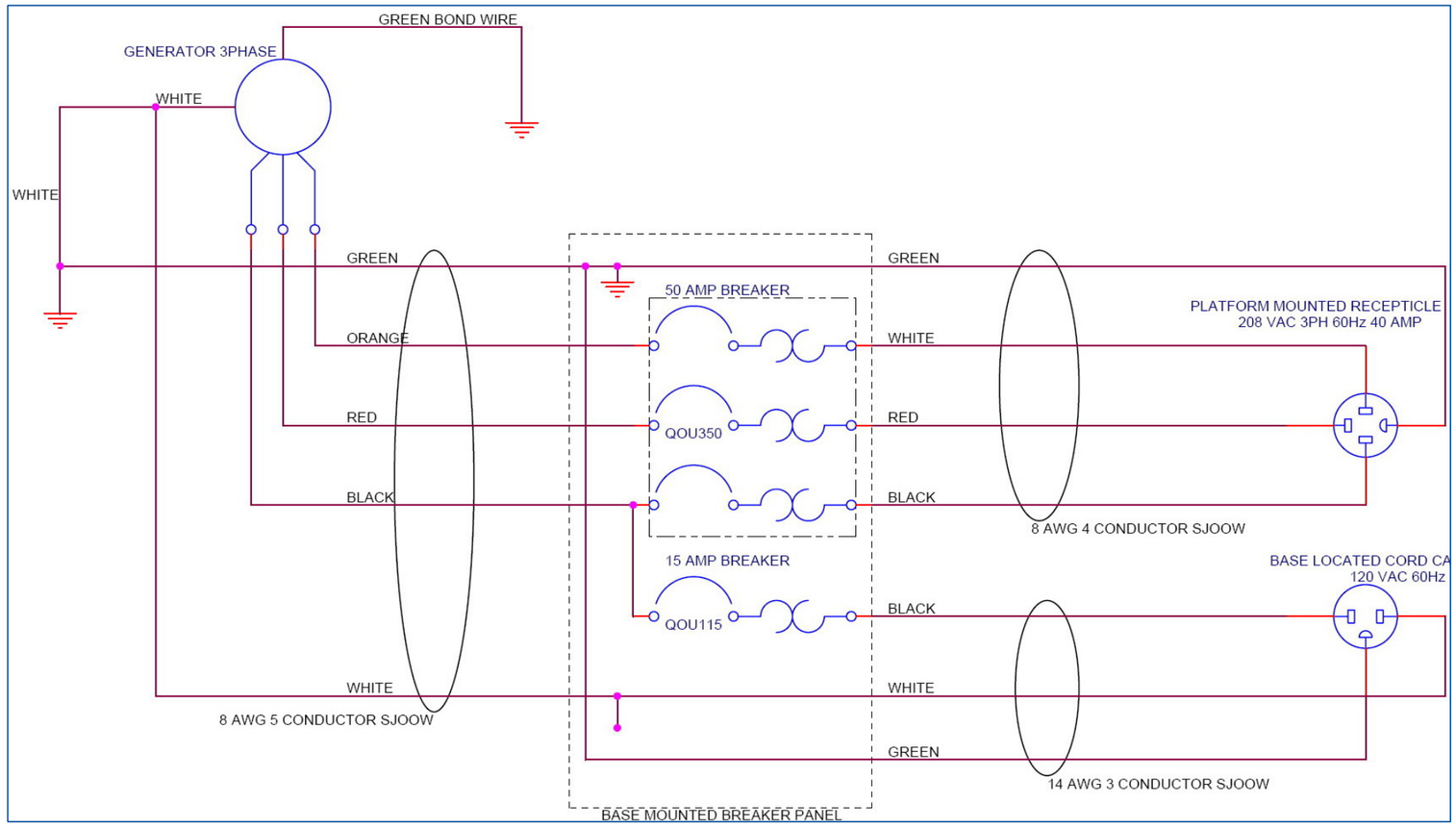

ELECTRIC WIRING SCHEMATIC

M141608AA1

3.17 Electrical Panel Diagram – Outrigger Option

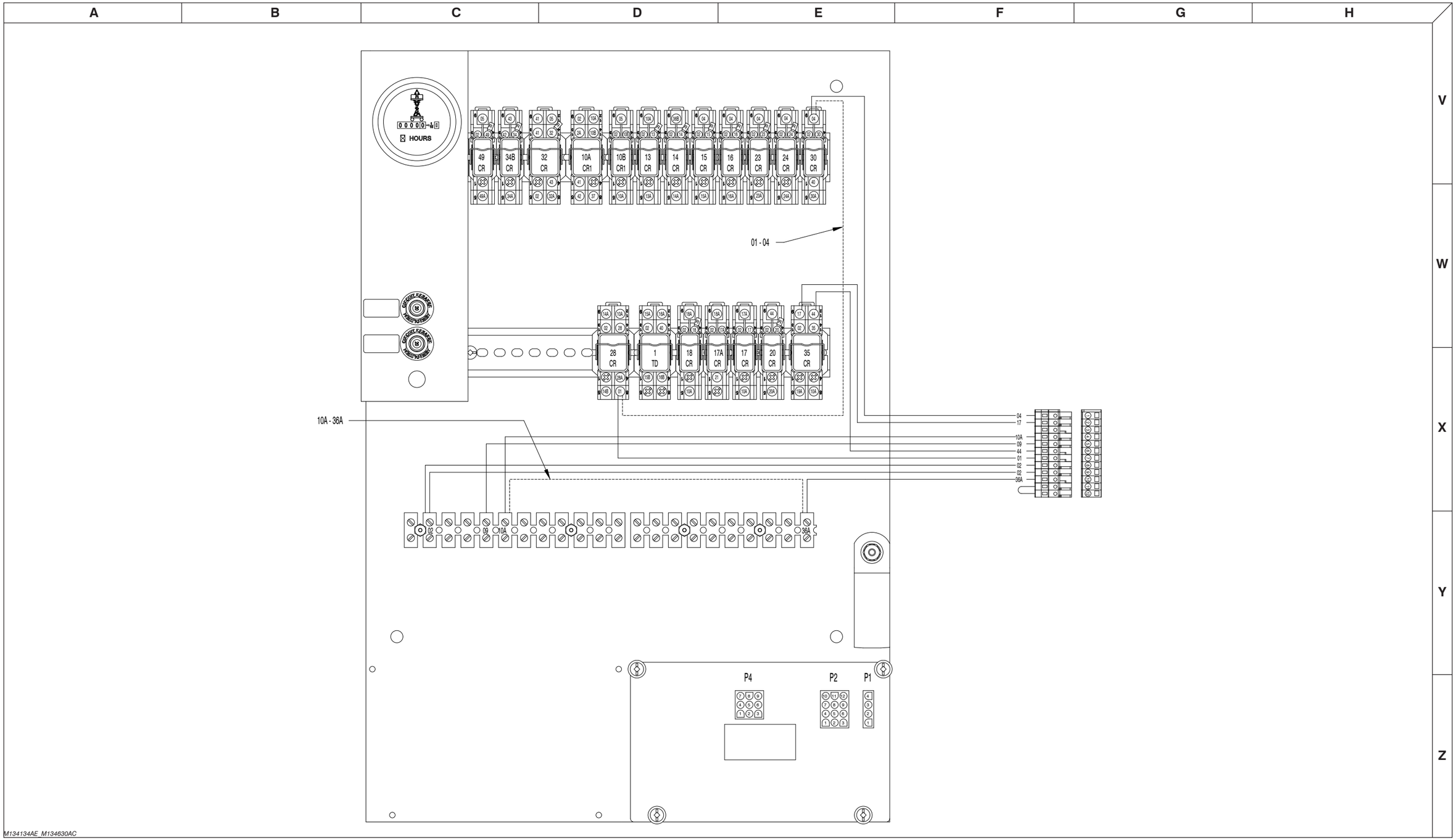

M134134AE M134630AC

3.18 Engine Interface Harness Wiring Diagram – Kubota Dual Fuel Engine (DF972 EFI)

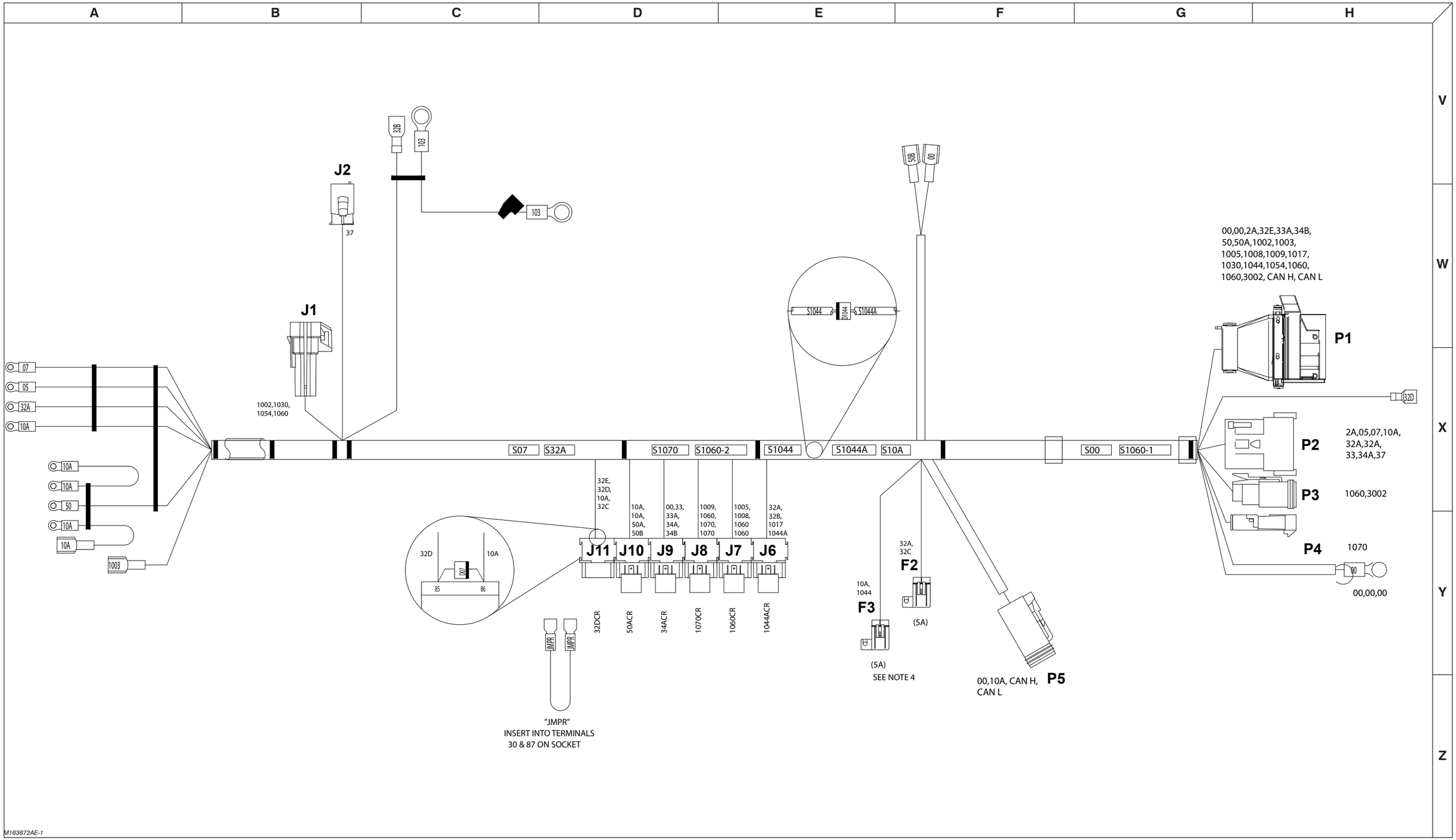

3.19 Engine Interface Harness Schematic - Kubota DF 972

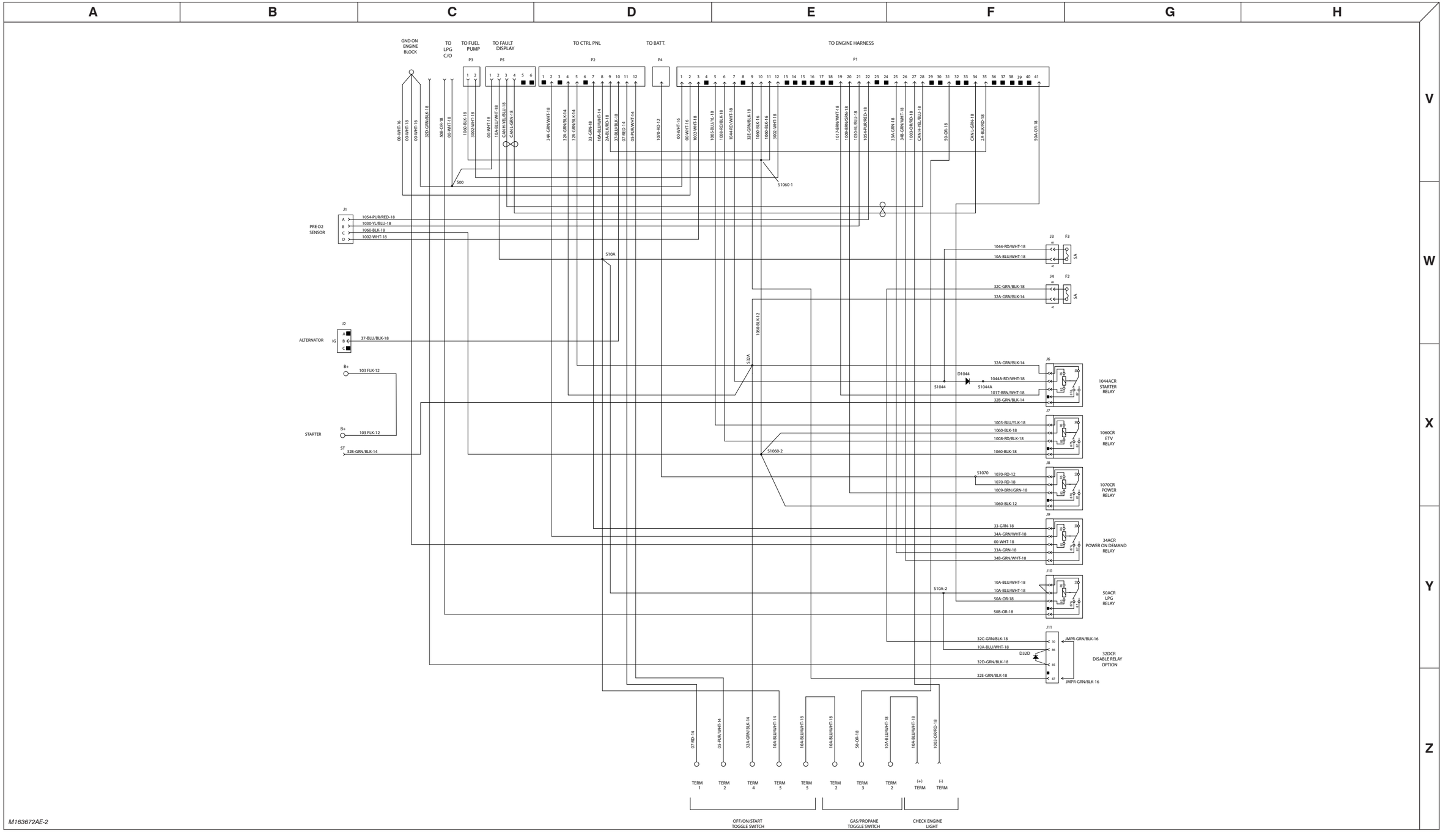

3.20 Engine Interface Electrical Schematic – Kubota Dual Fuel Engine (DF972 EFI)

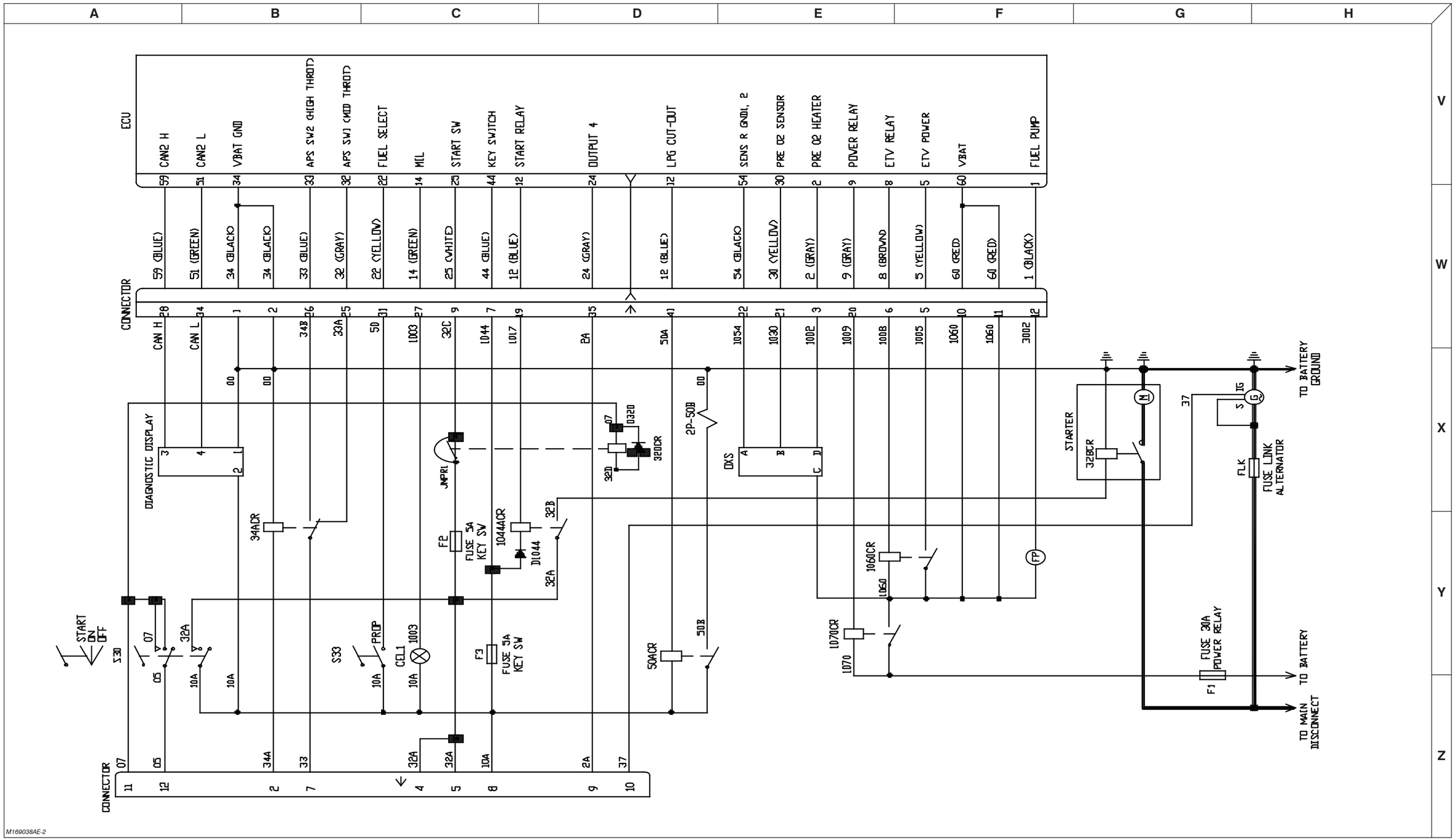

M169038AE-2

3.21 Telematics Harness Wiring Diagram

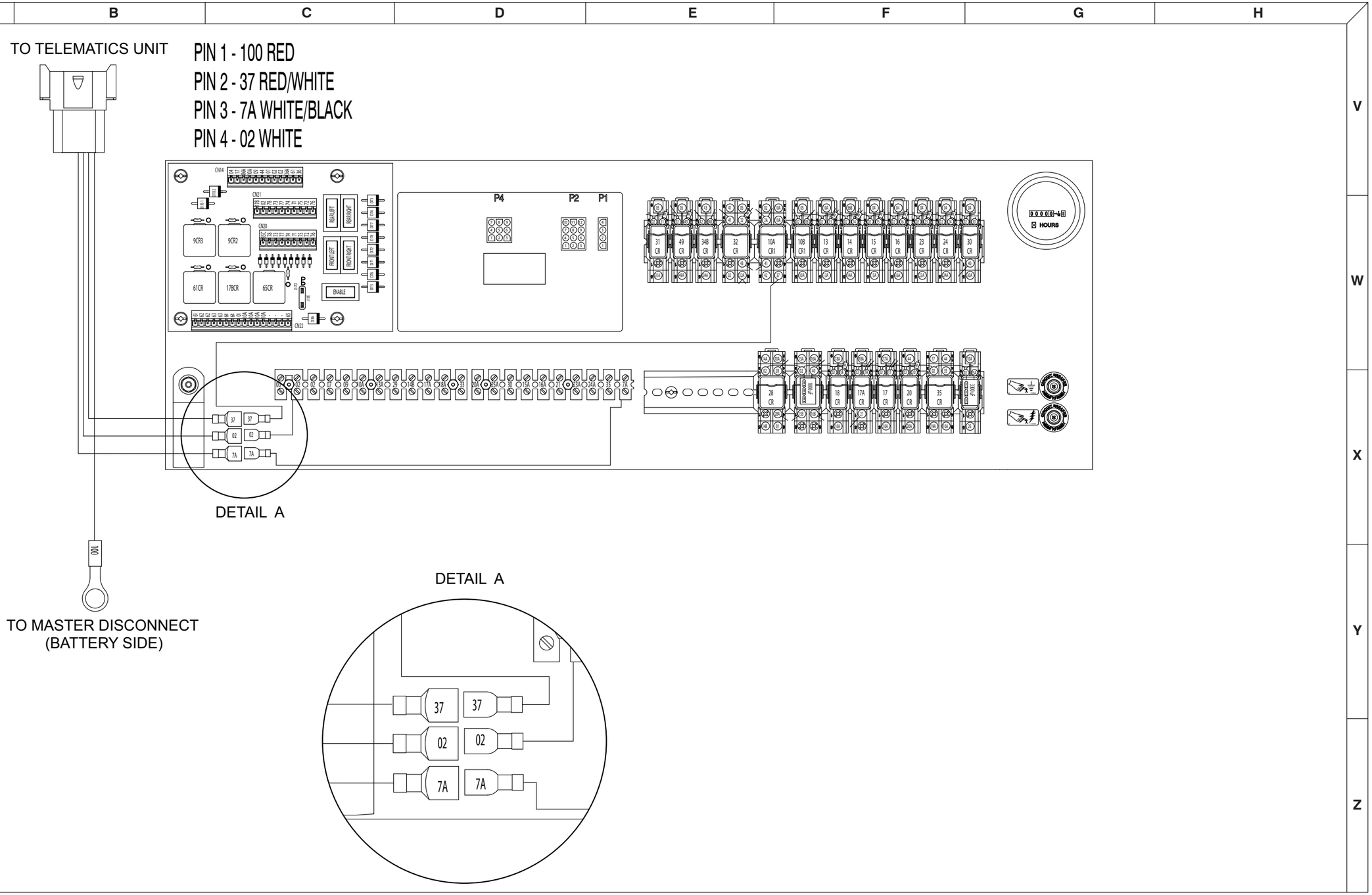

3.22 Flashing Light Relay Harness

NOTES:

1. UNLESS OTHERWISE SPECIFIED ALL DIMENSIONS ARE IN INCHES.
   - DIMS LESS THAN 5" ARE ±0.25"
   - DIMS 5" TO 20" ARE ±0.50"
   - DIMS GREATER THAN 20" ARE ±1.00"
2. DENOTES CONVOLUTED CONDUIT — DENOTES BLACK ELECTRICAL TAPE
   DENOTES UNLOOMED WIRES — DENOTES JACKETED CABLE
   DENOTES CABLE TIE — DENOTES CABLE TIE, UNDER CONDUIT
3. THE CONSTRUCTION, DESIGN, AND MANUFACTURING OF THIS WIRING ASSEMBLY MUST CONFORM TO THE LATEST REVISION OF SPS-PM-023 - ELECTRICAL ASSEMBLY PREPARATION AND IDENTIFICATION.
4. SPLICES TO BE CRIMPED AND SOLDERED OR ULTRASONIC WELDED AND THEN COVERED WITH ADHESIVE LINED HEAT-SHRINK TUBING.

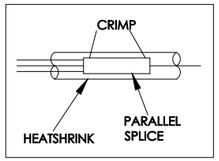

5. INDIVIDUAL CONDUCTORS ARE TO HAVE WIRE NUMBERS MARKED WITH INDELIBLE INK AT EACH TERMINATION, MINIMUM.
6. ALL WIRES ARE CSA CERTIFIED TYPE TEW FLAME TESTED THERMOPLASTIC EQUIPMENT WIRE, RATED FOR 600V, 105ºC. REFERENCE STANDARD CSA C22.2 No. 127.
7. ALL HARNESSES MUST BE INSPECTED FOR CONTINUITY AND CORRECT PINOUT OF ALL CONNECTORS.

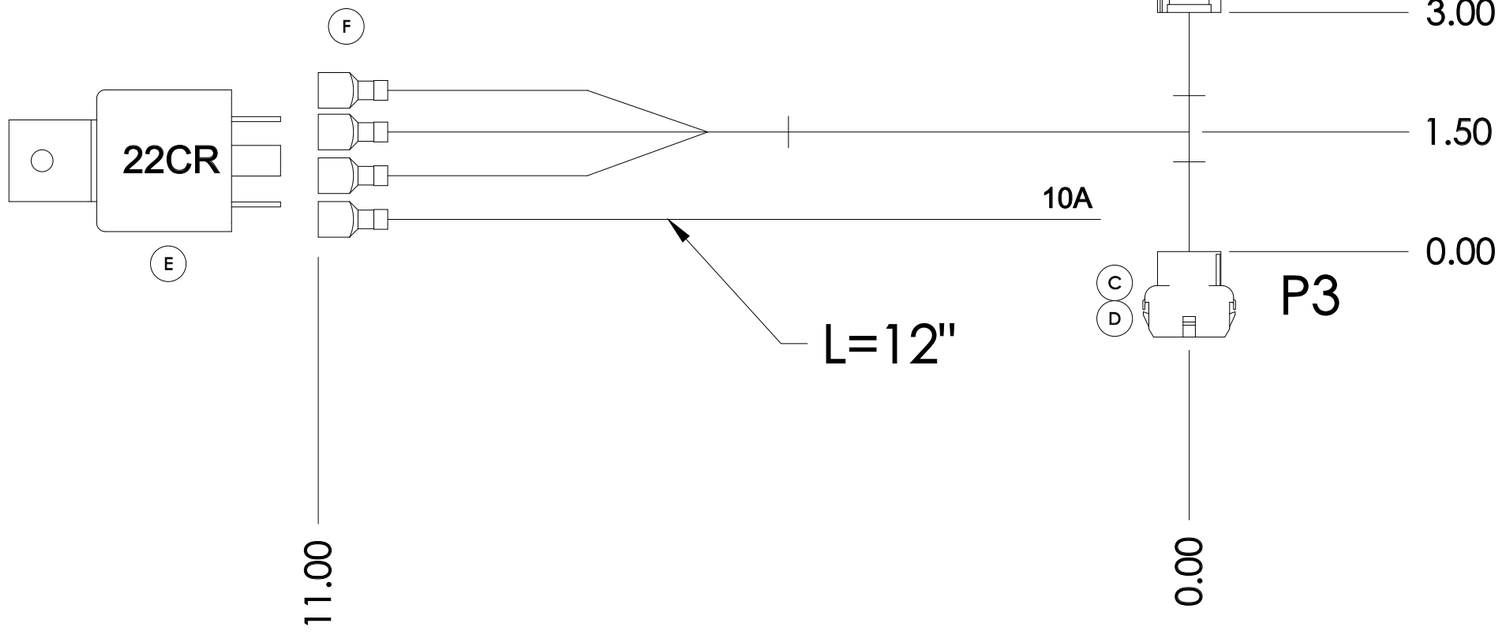

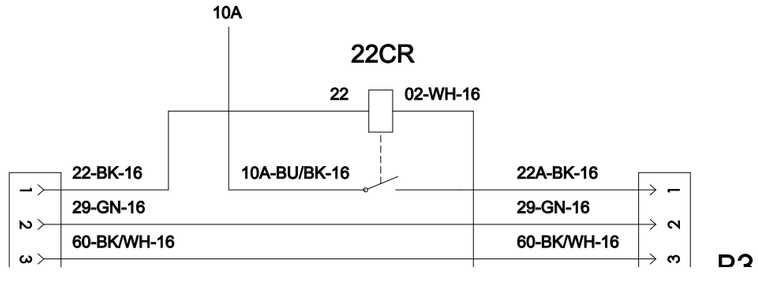

J3 BACK VIEW

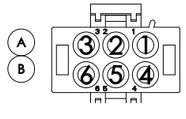

P3 BACK VIEW

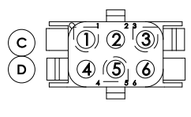

RELAY 22CR BOTTOM VIEW

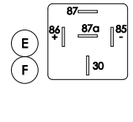

M239681AA-2

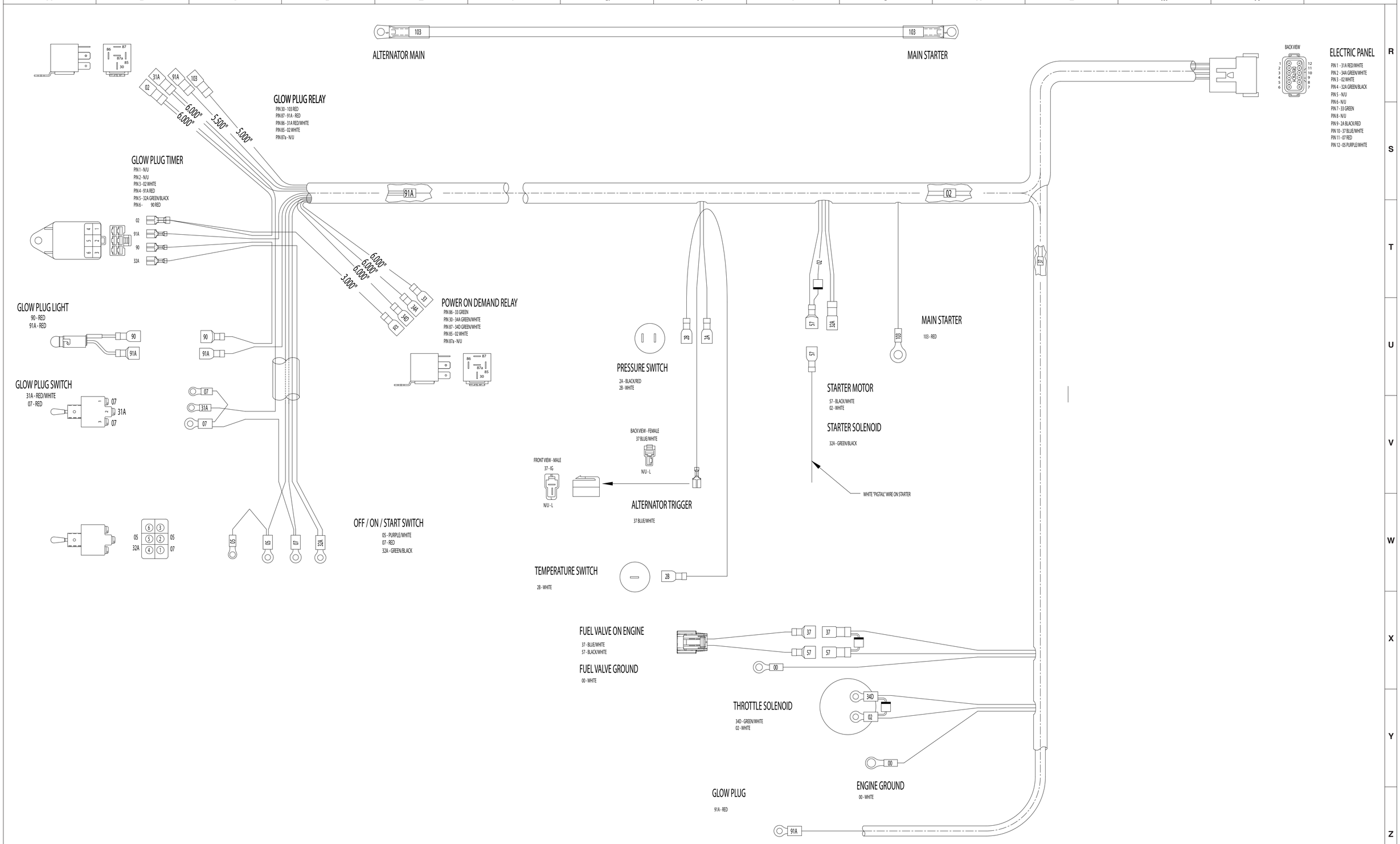
ALTERNATOR MAIN
103
MAIN STARTER
GLOW PLUG RELAY
PIN 30 - 103 RED
PIN 87 - 91A - RED
PIN 86 - 31A RED/WHITE
PIN 85 - 02 WHITE
PIN 87a - N/U
GLOW PLUG TIMER
PIN 1 - N/U
PIN 2 - N/U
PIN 3 - 02 WHITE
PIN 4 - 91A RED
PIN 5 - 32A GREEN/BLACK
PIN 6 - 90 RED
GLOW PLUG LIGHT
90 - RED
91A - RED
GLOW PLUG SWITCH
31A - RED/WHITE
07 - RED
POWER ON DEMAND RELAY
PIN 86 - 33 GREEN
PIN 30 - 34A GREEN/WHITE
PIN 87 - 34D GREEN/WHITE
PIN 85 - 02 WHITE
PIN 87a - N/U
PRESSURE SWITCH
2A - BLACK/RED
2B - WHITE
BACK VIEW - FEMALE
37 BLUE/WHITE
FRONT VIEW - MALE
37 - IG
N/U - L
ALTERNATOR TRIGGER
37 BLUE/WHITE
TEMPERATURE SWITCH
2B - WHITE
STARTER MOTOR
57 - BLACK/WHITE
02 - WHITE
STARTER SOLENOID
32A - GREEN/BLACK
WHITE "PIGTAIL" WIRE ON STARTER
MAIN STARTER
103 - RED
BACK VIEW
ELECTRIC PANEL
PIN 1 - 31A RED/WHITE
PIN 2 - 34A GREEN/WHITE
PIN 3 - 02 WHITE
PIN 4 - 32A GREEN/BLACK
PIN 5 - N/U
PIN 6 - N/U
PIN 7 - 33 GREEN
PIN 8 - N/U
PIN 9 - 2A BLACK/RED
PIN 10 - 37 BLUE/WHITE
PIN 11 - 07 RED
PIN 12 - 05 PURPLE/WHITE
OFF / ON / START SWITCH
05 - PURPLE/WHITE
07 - RED
32A - GREEN/BLACK
FUEL VALVE ON ENGINE
37 - BLUE/WHITE
57 - BLACK/WHITE
FUEL VALVE GROUND
00 - WHITE
THROTTLE SOLENOID
34D - GREEN/WHITE
02 - WHITE
GLOW PLUG
91A - RED
ENGINE GROUND
00 - WHITE

3.24 Engine Harness Wiring Diagram – Kubota Dual Fuel Engine

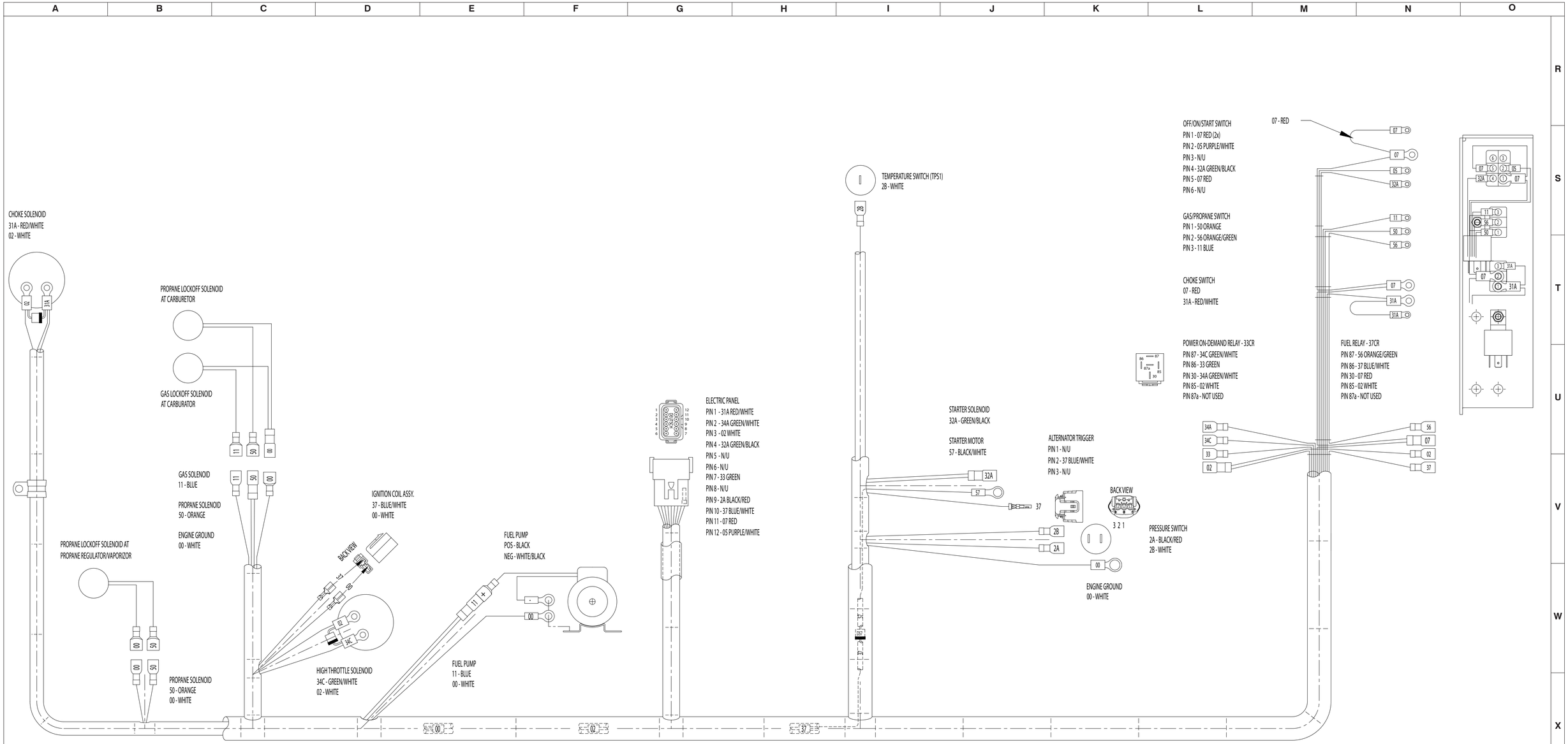

M148338AB_1

3.25 Electrical Panel Diagram (ANSI/CSA)

Serial Breakdown Reference Chart	
Model	Serial Number
SJ8831	36000341 and above
SJ8841	40002217 and above

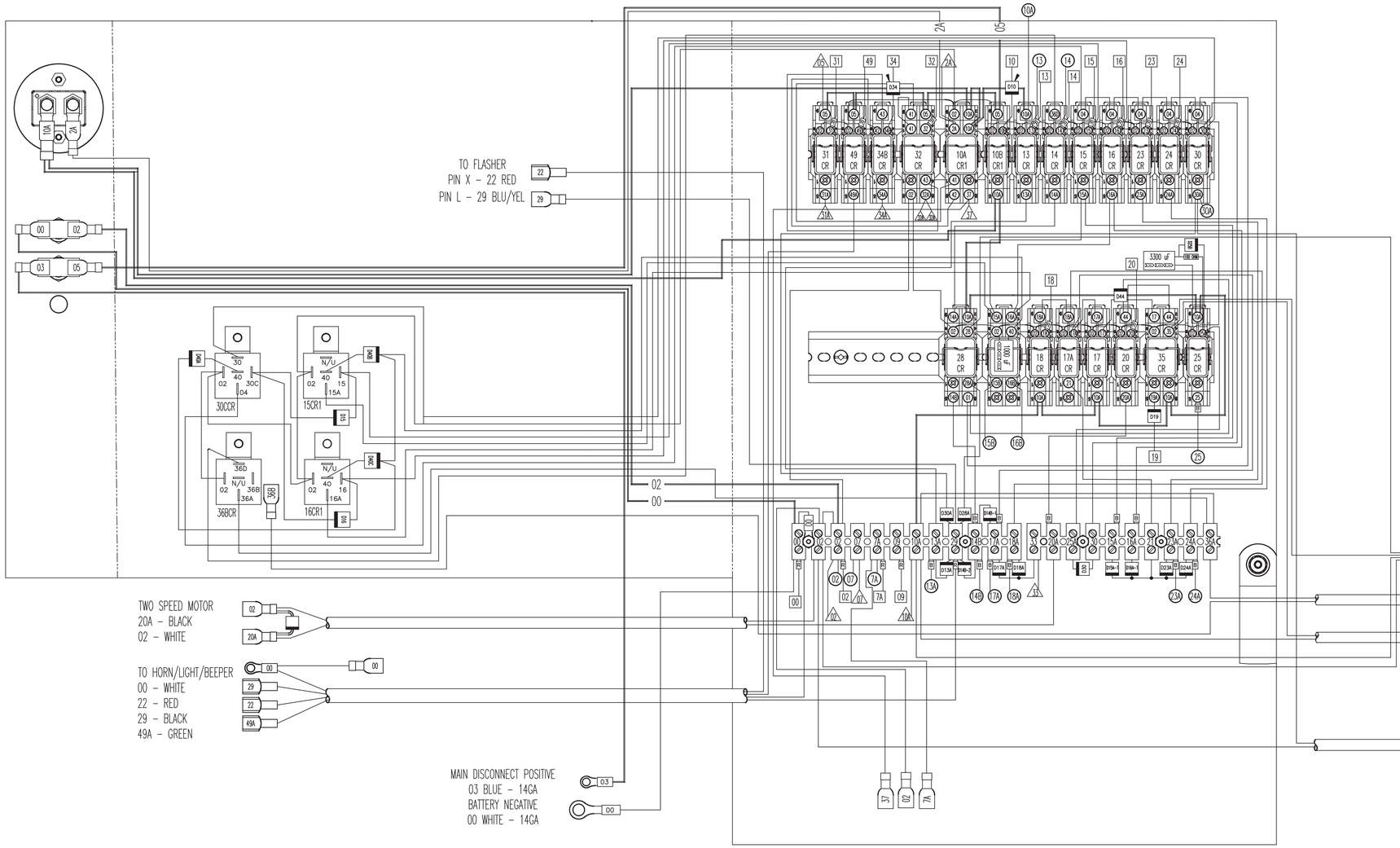

BACK VIEW
FEMALE

(34) GREEN WHITE	16	8	WHITE BLACK (16)
(32) GREEN BLACK	15	7	BLUE (15)
(31) RED WHITE	14	6	BLACK (14)
(24) BLUE BLACK	13	5	ORANGE (13)
(23) BLACK WHITE	12	4	BLUE WHITE (10)
(20) BLACK WHITE RED	11	3	ORANGE RED (09)
(19) ORANGE BLACK	10	2	RED (7)
(18) RED BLACK	9	1	WHITE (02)

(GROUND) BLUE BLACK WHITE TO (00)
GROUND

BACK VIEW
FEMALE

	32	24	GREEN BLACK WHITE (77)
	31	23	RED GREEN (76)
	30	22	WHITE RED (75)
(7D) RED BLACK GREEN	29	21	BLACK RED (74)
(100) WHITE RED GREEN	28	20	ORANGE GREEN (73)
(60) BLACK RED GREEN	27	19	WHITE BLACK RED (72)
(85) ORANGE BLACK WHITE	26	18	BLUE RED (71)
(78) RED BLACK WHITE	25	17	GREEN (49))

M1995046AA

3.26 Electrical Panel Diagram (ANSI/CSA)

Serial Breakdown Reference Chart	
Model	Serial Number
SJ8831	36000340 and below
SJ8841	40002216 and below

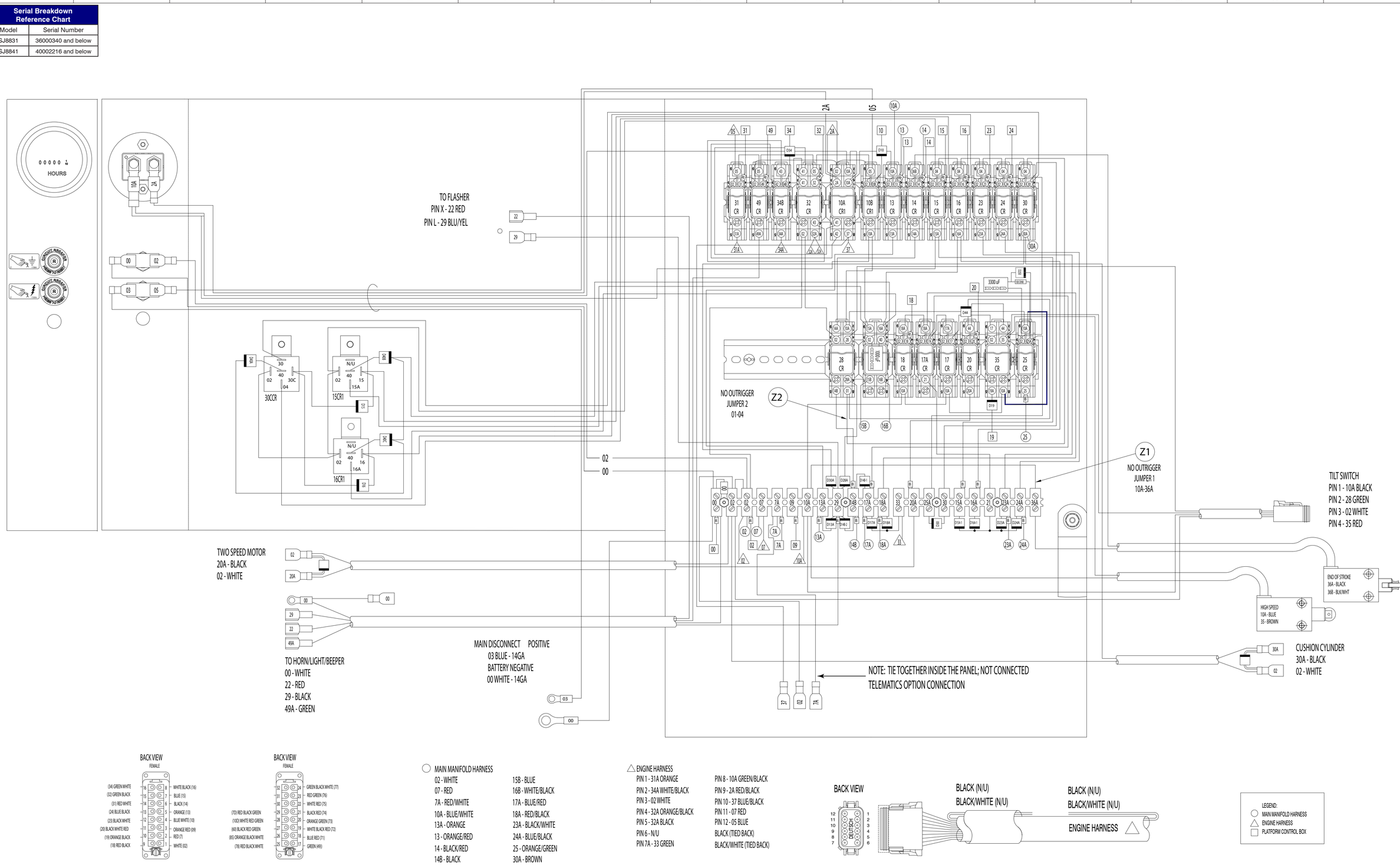

M163424AG

3.27 Electrical Panel Diagram with Positive Air Shutoff Option

Serial Breakdown Reference Chart	
Model	Serial Number
SJ8831	36000341 and above
SJ8841	40002217 and above

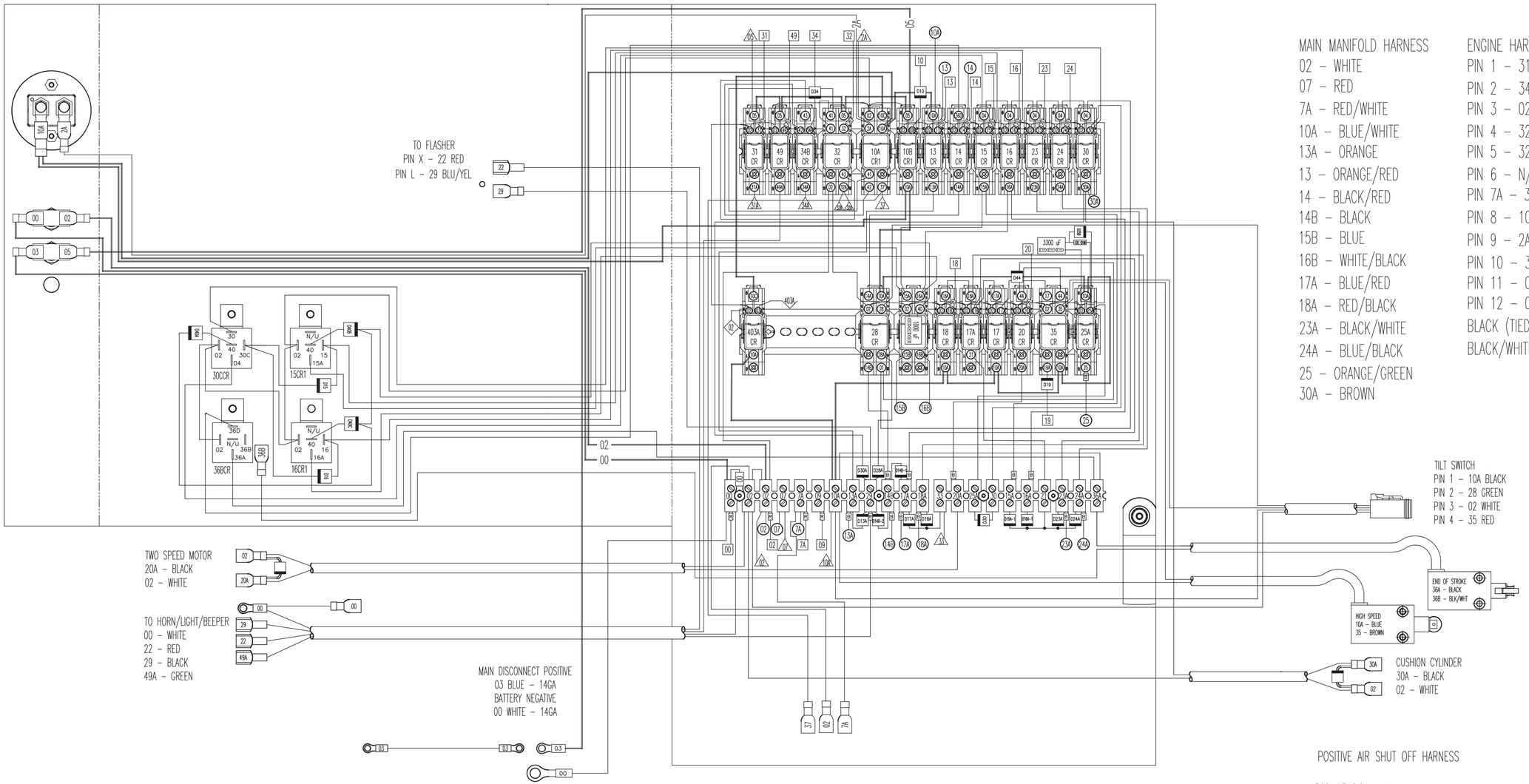

M1995086A

3.28 Electrical Panel Diagram with Positive Air Shutoff Option

Serial Breakdown Reference Chart	
Model	Serial Number
SJ8831	36000340 and below
SJ8841	40002216 and below

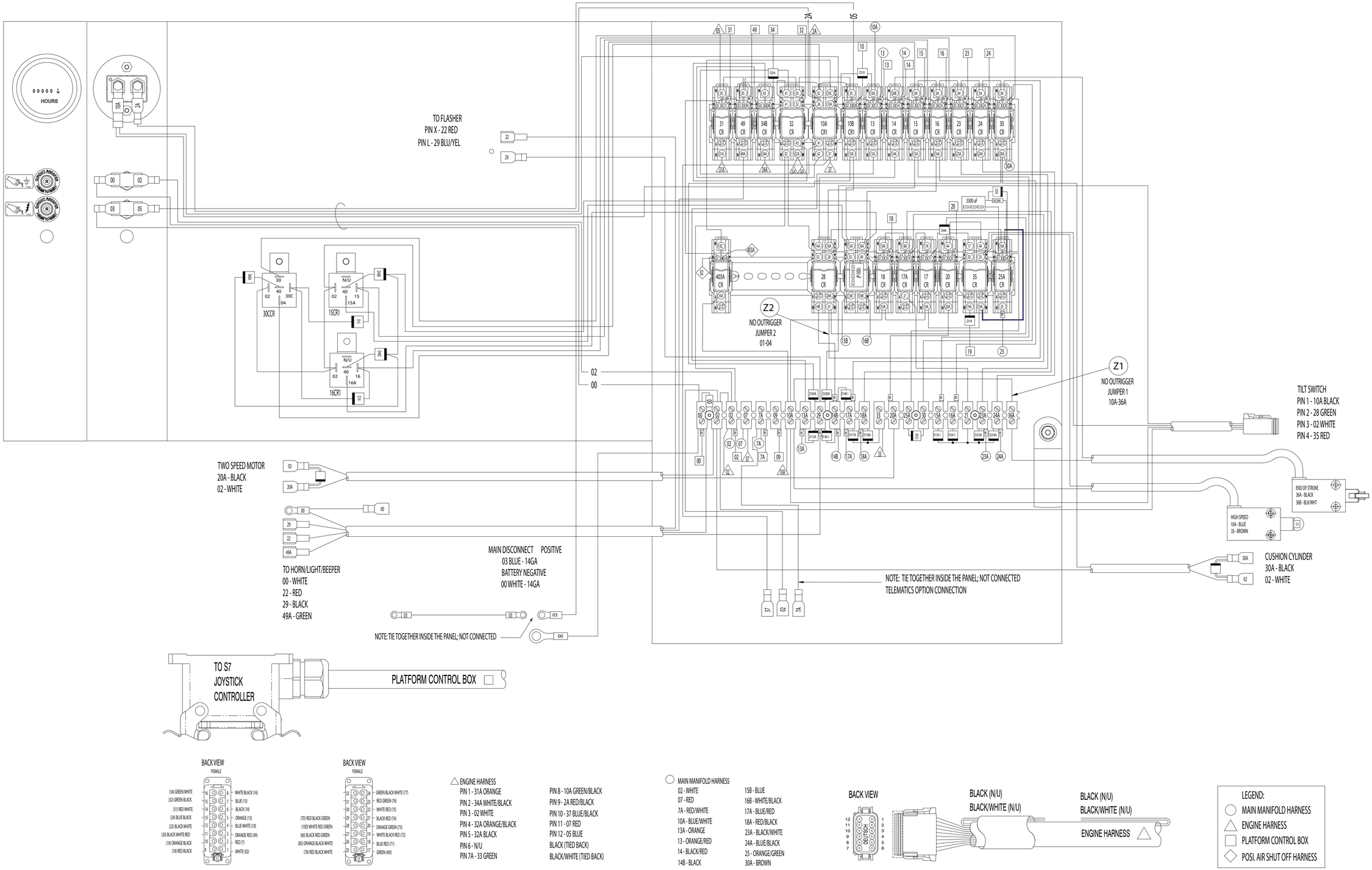

M1940004AB

3.28 Electrical Panel Diagram with Positive Air Shutoff Option

3.29 Positive Air Shutoff Harness Wiring Diagram – Diesel Engine

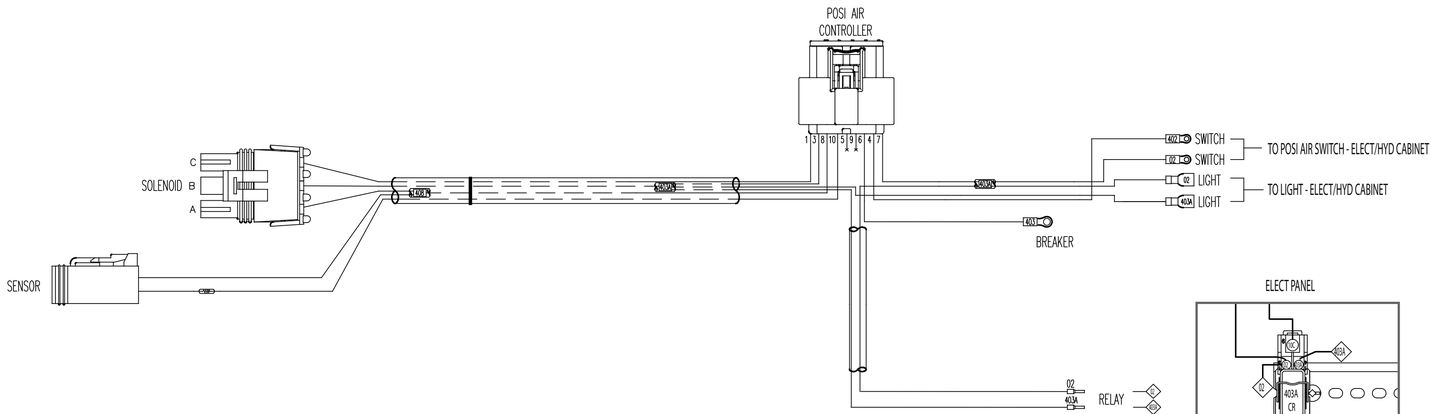

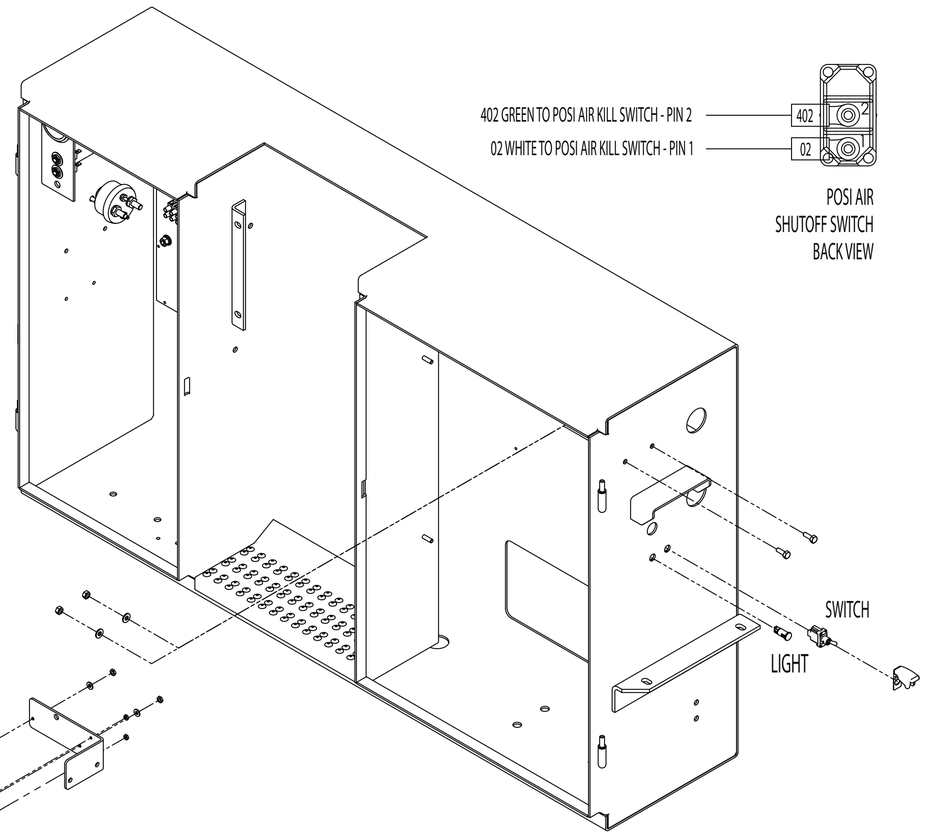

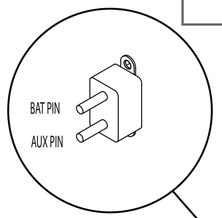

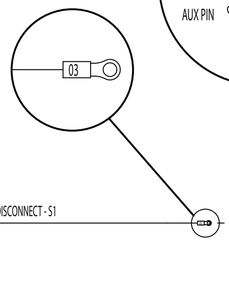

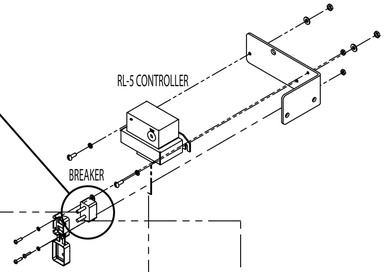

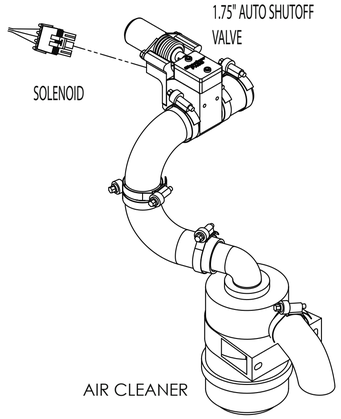

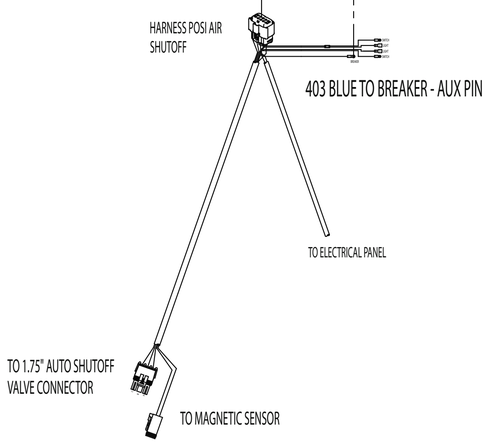

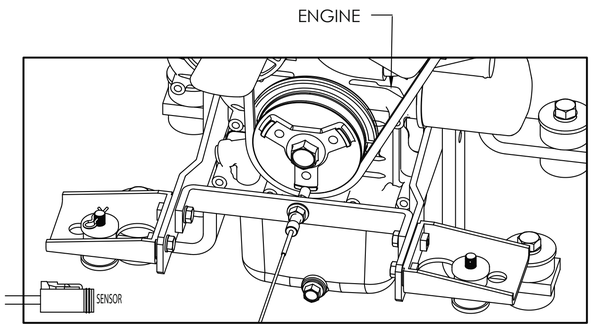

M171727AA_184000AA_M184126AB-3

3.29 Positive Air Shutoff Harness Wiring Diagram – Diesel Engine

3.30 Electrical Schematic – Dual Fuel – No Options (ANSI/CSA)

Serial Breakdown Reference Chart	
Model	Serial Number
SJ8831	36000341 and above
SJ8841	40002217 and above

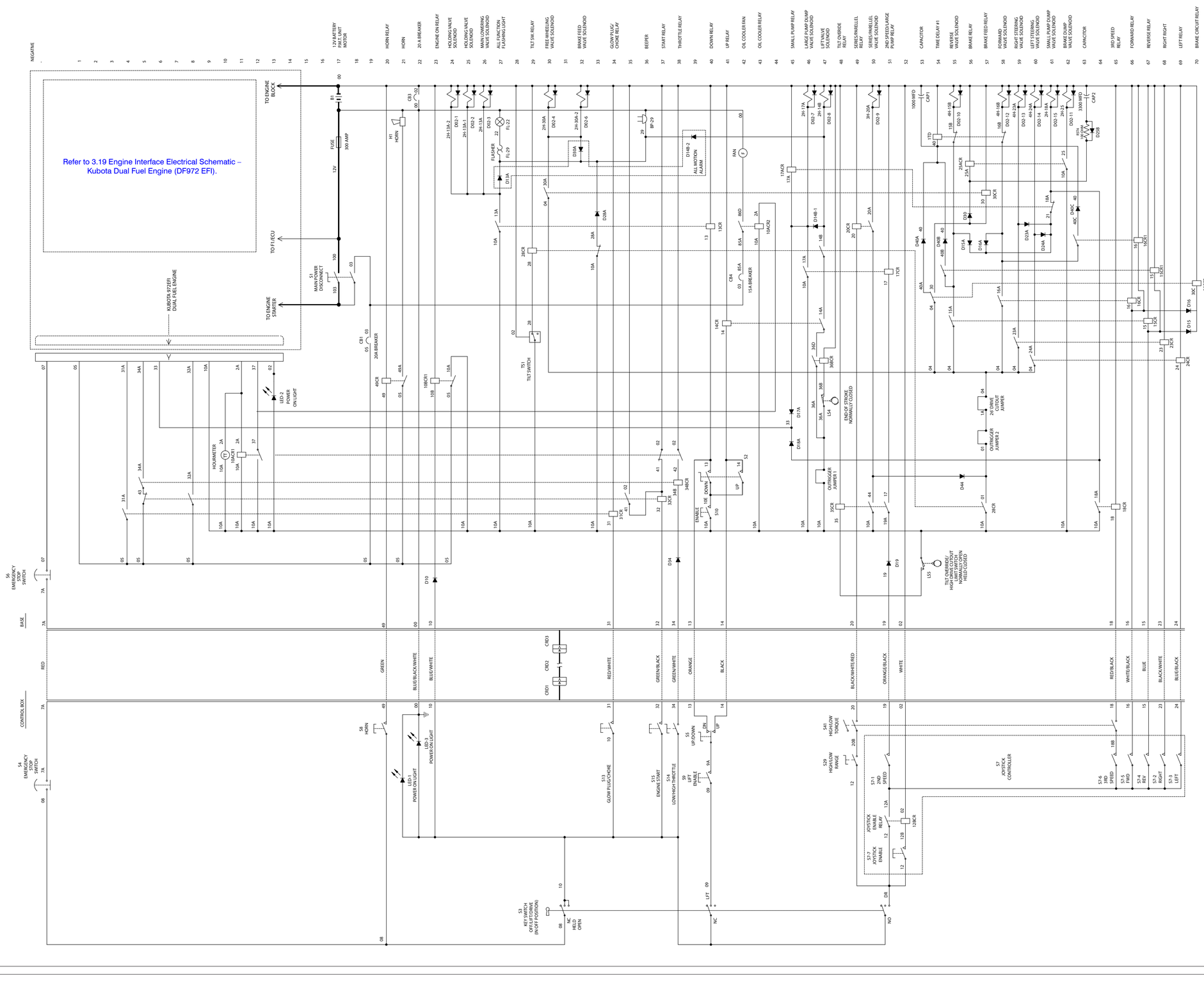

3.31 Electrical Schematic – Dual Fuel – No Options (ANSI/CSA)

Serial Breakdown Reference Chart	
Model	Serial Number
SJ8831	36000298 to 36000340
SJ8841	40001405 to 40002216

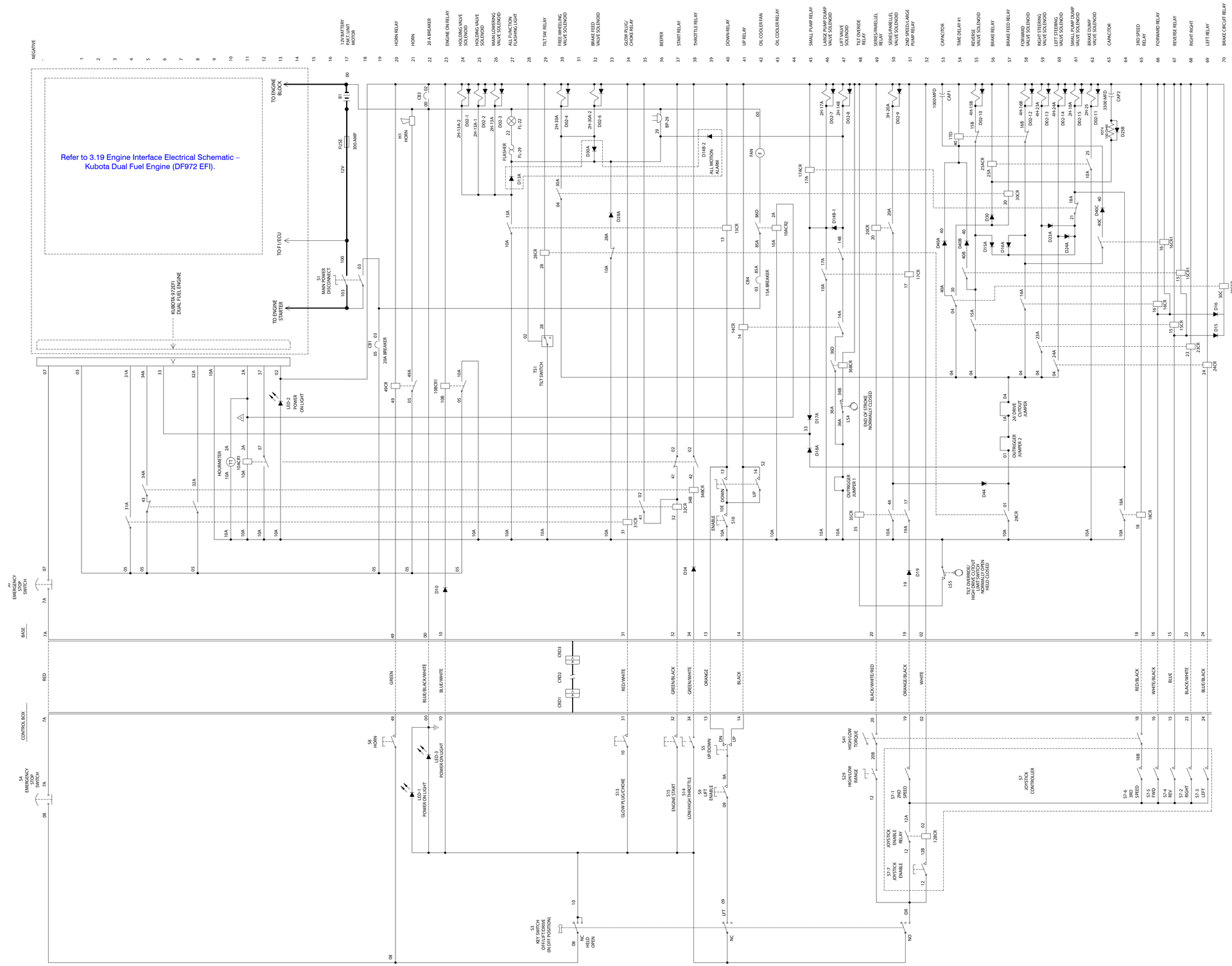

3.32 Electrical Schematic – Dual Fuel – No Options (ANSI/CSA)

Serial Breakdown Reference Chart	
Model	Serial Number
SJ8831	36000297 and below
SJ8841	40001405 and below

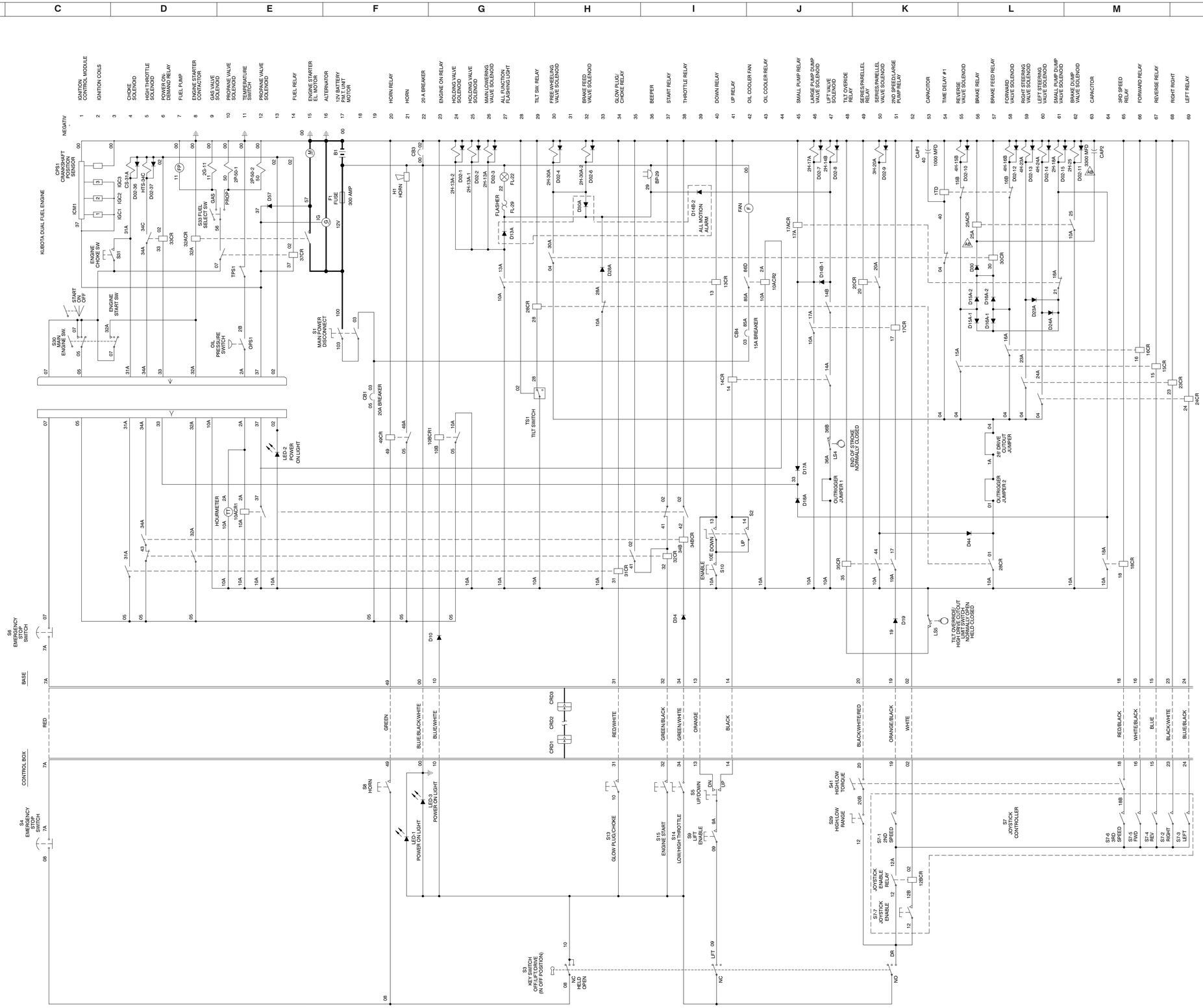

M163633AB

3.33 Electrical Schematic – Dual Fuel – All Options (ANSI/CSA)

Serial Breakdown Reference Chart	
Model	Serial Number
SJ8831	36000341 and above
SJ8841	40002217 and above

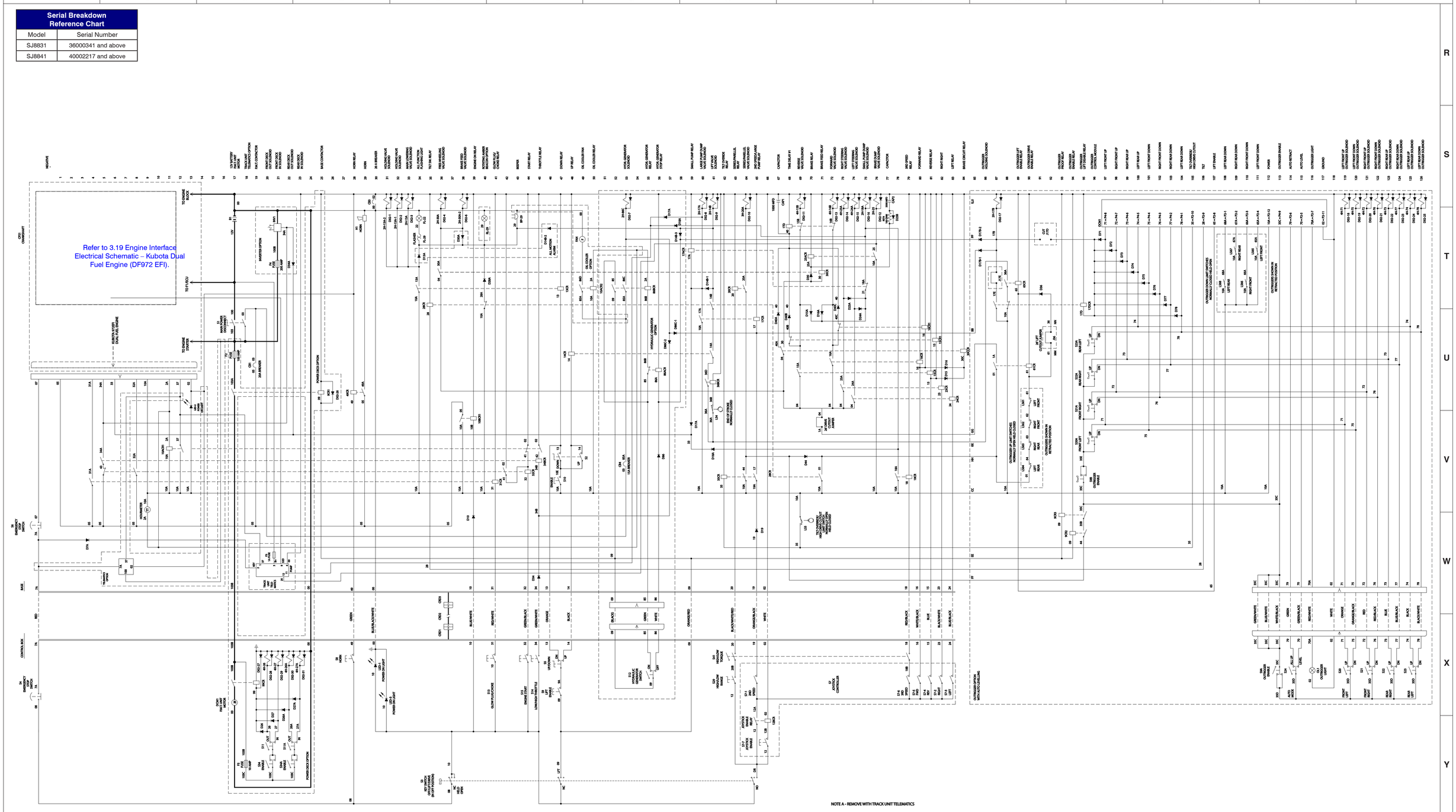

3.34 Electrical Schematic – Dual Fuel – All Options (ANSI/CSA)

Serial Breakdown Reference Chart	
Model	Serial Number
SJ8831	36000298 to 36000340
SJ8841	40001405 to 40002216

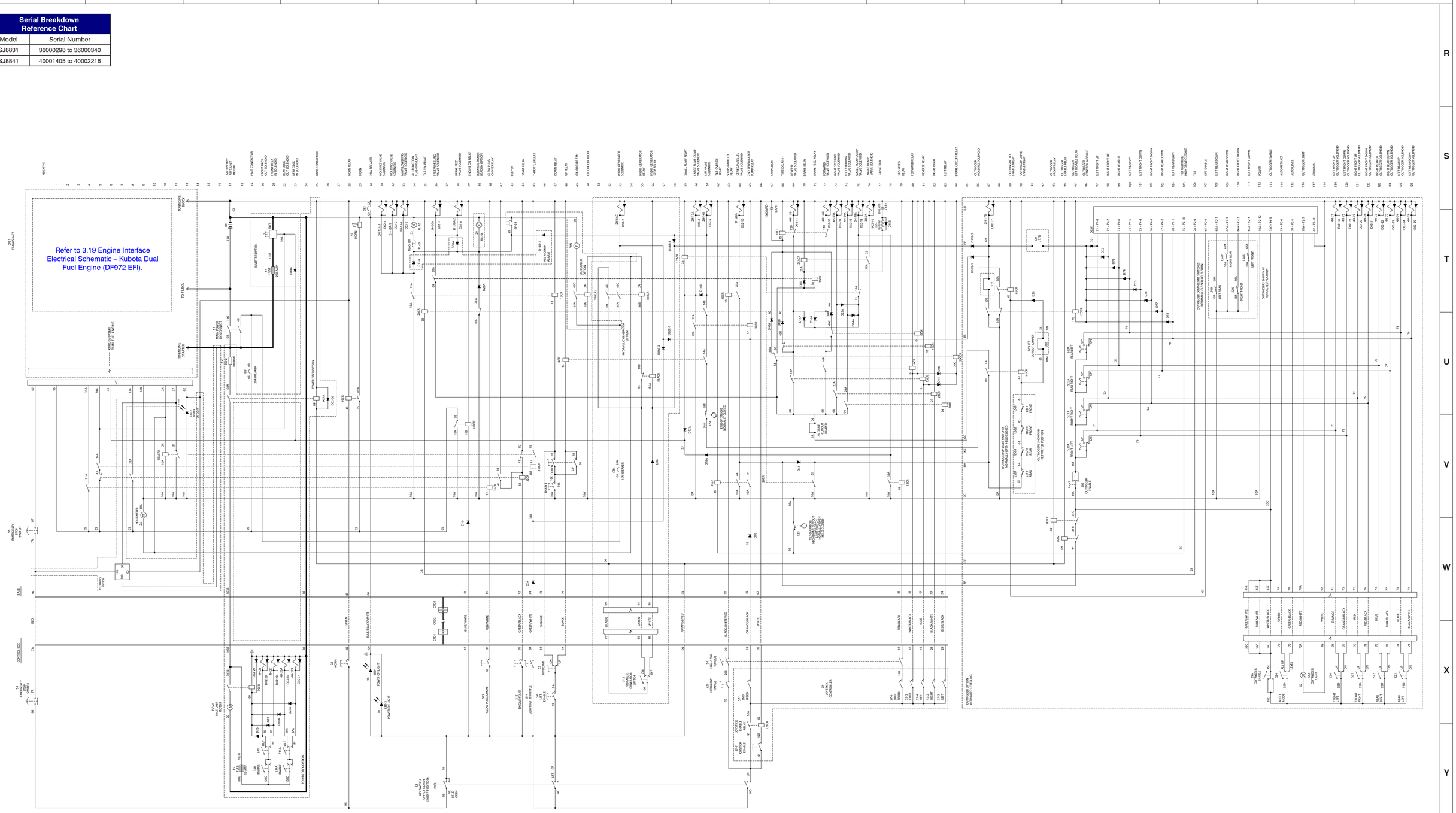
Refer to 3.19 Engine Interface Electrical Schematic – Kubota Dual Fuel Engine (DF972 EFI).
KUBOTA EFI/EFI DUAL FUEL ENGINE
TO ENGINE BLOCK
TO ECU
TO ENGINE SYSTEM
CPS CRANKSHAFT
NEGATIVE
MAIN POWER DISCONNECT
INVERTER OPTION
200 AMP
200 AMP BREAKER
POWER DECK OPTION
HOURMETER
EMERGENCY STOP SWITCH
CONTROL BOX
FOOT PEDAL CONTROL
FOOT ENABLE
HORN
HORN RELAY
20 A BREAKER
HOLDING VALVE SOLENOID
PROPORTIONING VALVE SOLENOID
ALT./FUNCTION CUTOUT RELAY
TILT/OR RELAY
FREE/HYDRAULIC VALVE SOLENOID
BRAKE FREED VALVE SOLENOID
ENGINE ON RELAY
BEACON OPTION
CLOSE/TILT/ CURB/LIGHT
BASE CONNECTOR
BEEPER
START RELAY
THROTTLE RELAY
DOWN RELAY
UP RELAY
OIL COOLER FAN
OIL COOLER RELAY
HYDR. GENERATOR SOLENOID
HYDR. GENERATOR RELAY
HYDR. GENERATOR STOP RELAY
SMALL PUMP RELAY
LARGE PUMP DUMP VALVE SOLENOID
LIFT VALVE SOLENOID
TILT/CHARGE VALVE SOLENOID
BEEP/BRAKE/TILT RELAY
DIAG/PRESSURE SWITCH RELAY
CAPACITOR
TIME DELAY #1
REVERSE BEEP SOLENOID
BRAKE RELAY
BRAKE FREED RELAY
FORWARD SOLENOID
RIGHT STEERING VALVE SOLENOID
LEFT STEERING VALVE SOLENOID
SMALL PUMP DUMP VALVE SOLENOID
BRAKE PUMP VALVE SOLENOID
CAPACITOR
DECAYED VOLTAGE
FORWARD RELAY
REVERSE RELAY
RIGHT RELAY
LEFT RELAY
BRAKE CIRCUIT RELAY
OUTRIGGER HORN/ALARM SOLENOID
OUTRIGGER LIFT ENABLE RELAY
OUTRIGGER DRIVE ENABLE RELAY
OUTRIGGER ENABLE RELAY
OUTRIGGER LIFT/DISABLE RELAY
OUTRIGGER HOURMETER MODULE
LIFT FRONT UP
RIGHT FRONT UP
RIGHT REAR UP
LEFT REAR UP
LEFT FRONT DOWN
RIGHT FRONT DOWN
RIGHT REAR DOWN
LEFT REAR DOWN
HOURMETER CUTOUT
TILT
LIFT ENABLE
LEFT REAR DOWN
RIGHT FRONT DOWN
LEFT FRONT DOWN
POWER
OUTRIGGER ENABLE
AUTO RETRACT
AUTO LEVEL
OUTRIGGER LIGHT
GROUND
OUTT FRONT UP SOLENOID
OUTT FRONT DOWN SOLENOID
OUTT REAR UP SOLENOID
OUTT REAR DOWN SOLENOID
OUTT REAR UP SOLENOID
OUTT REAR DOWN SOLENOID
OUTT FRONT UP SOLENOID
OUTT FRONT DOWN SOLENOID
OUTRIGGER OPTION WITH LIFT/LEVELING
OUTRIGGER LIFT SWITCHES NORMALLY OPEN/HELD CLOSED
OUTRIGGER SOLENOIDS RETRACTED POSITION
OUTRIGGER SOLENOIDS RETRACTED POSITION
OUTRIGGER LIFT SWITCHES NORMALLY CLOSED/HELD OPEN
OUTRIGGER SOLENOIDS RETRACTED POSITION
OUTRIGGER LIGHT
AUTO MODE
LEVEL
FRONT LEFT
FRONT RIGHT
REAR RIGHT
REAR LEFT
S1 KEYSWITCH OFF/RUN/START
S2 HORN
S3 BEACON
S4 EMERGENCY STOP SWITCH
S5 LIFT/DOWN
S6 TILT/CHARGE
S7 ENABLE/ THROTTLE
S8 FOOT ENABLE
S9 DRIVE ENABLE
S10 JOYSTICK ENABLE
S11 FOOT ENABLE
S12 HYDRAULIC GENERATOR SWITCH
S13 GLOW PLUG/CHOKE
S14 PREHEAT
S15 ENGINE SPEED
S16 LOW/HIGH SHUTTLE
S17 JOYSTICK ENABLE
S18 JOYSTICK ENABLE
S19 HIGH/LOW RANGE
S20 JOYSTICK
S21 LIFT/ DOWN
S22 TILT/ CHARGE
S23 RIGHT
S24 LEFT
S25 FORWARD
S26 REVERSE
S27 RIGHT
S28 LEFT
S29 HIGH/LOW TORQUE
S30 OUTRIGGER ENABLE
S31 FRONT LEFT
S32 FRONT RIGHT
S33 REAR RIGHT
S34 REAR LEFT
S35 OUTRIGGER ENABLE
S36 OUTRIGGER LIGHT
S37 AUTO MODE
S38 LEVEL
S39 FRONT LEFT
S40 FRONT RIGHT
S41 REAR RIGHT
S42 REAR LEFT
S43 OUTRIGGER ENABLE
S44 OUTRIGGER LIGHT
S45 AUTO MODE
S46 LEVEL
S47 FRONT LEFT
S48 FRONT RIGHT
S49 REAR RIGHT
S50 REAR LEFT
S51 OUTRIGGER ENABLE
S52 OUTRIGGER LIGHT
S53 AUTO MODE
S54 LEVEL

3.35 Electrical Schematic – Dual Fuel – All Options (ANSI/CSA)

Serial Breakdown Reference Chart	
Model	Serial Number
SJ8831	36000297 and Below
SJ8841	40001405 and Below

3.36 Electrical Schematic – Diesel – All Options (ANSI/CSA)

Serial Breakdown Reference Chart	
Model	Serial Number
SJ8831	36000341 and Above
SJ8841	40002217 and Above

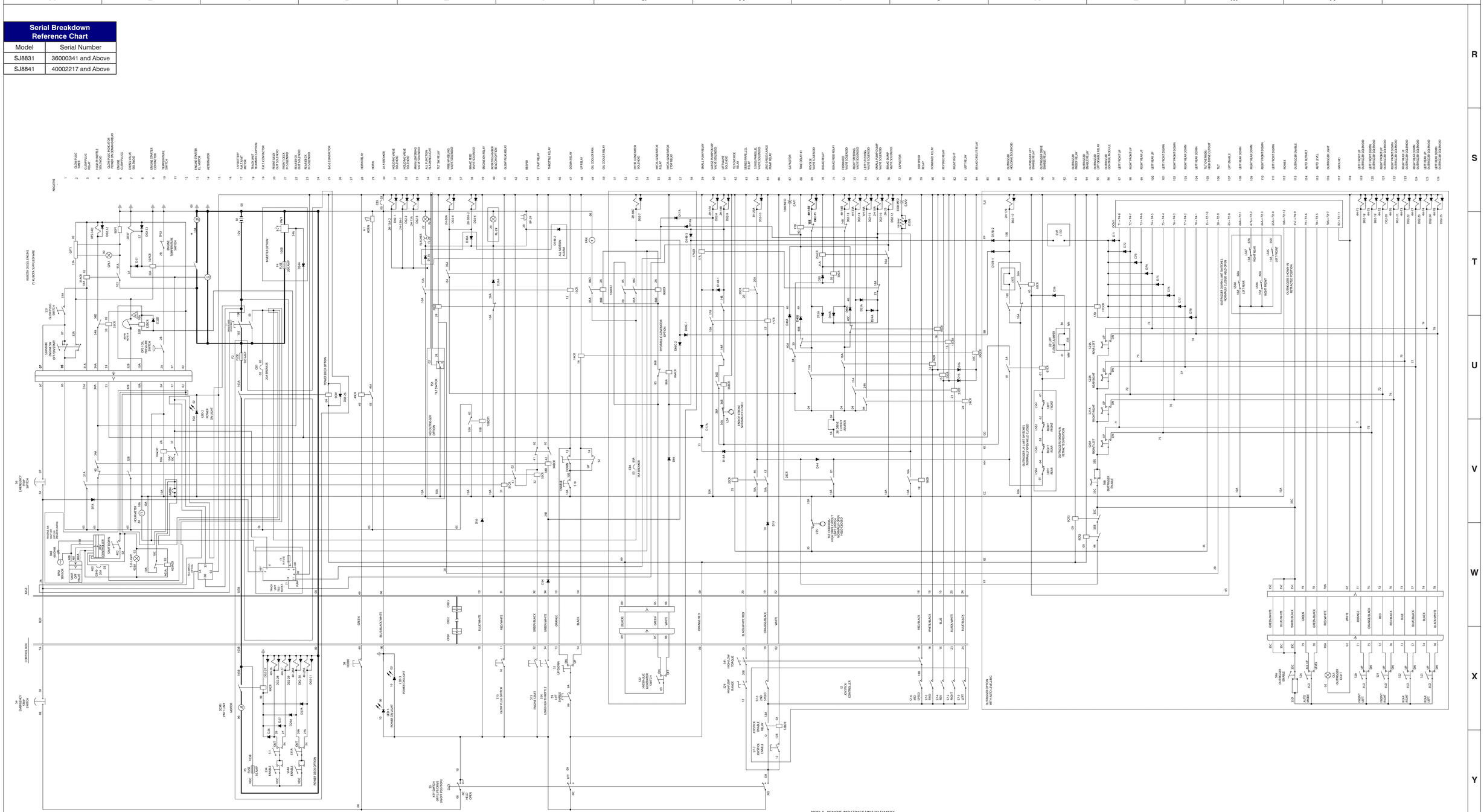

3.37 Electrical Schematic – Diesel – All Options (ANSI/CSA)

Serial Breakdown Reference Chart	
Model	Serial Number
SJ8831	36000340 and below
SJ8841	40002216 and below

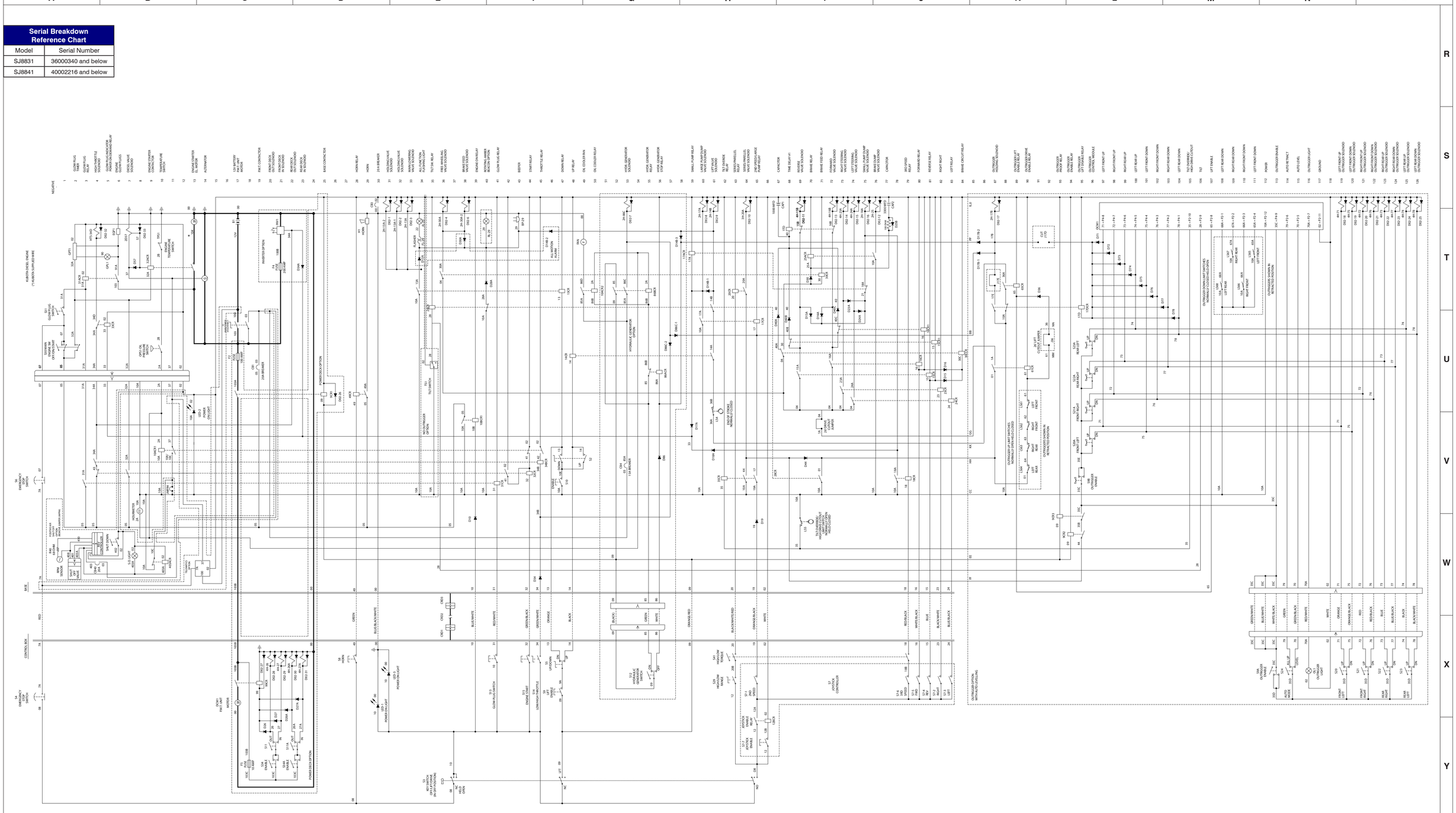
A
B
C
D
E
F
G
H
I
J
K
L
M
N
O
R
S
T
U
V
W
X
Y
Z
KUBOTA DIESEL ENGINE (*) HUBOTA SUPPLIED WIRE
S11 IGNITION SWITCH
S10 EMERGENCY SWITCH
SIGMAN CONTROL UNIT
HYD OIL PRESSURE SWITCH
ENGINE TEMPERATURE SWITCH
ENGINE STARTER MOTOR
ALTERNATOR
12V BATTERY
PUMP START MOTOR
FWD CONTACTOR
REV CONTACTOR
FRONT DECK OUT SOLENOID
FRONT DECK IN SOLENOID
REAR DECK OUT SOLENOID
REAR DECK IN SOLENOID
BASE CONTACTOR
HORN RELAY
HORN
25A BREAKER
HOLDING COIL
HOLDING VALVE SOLENOID
MAIN LOWERING VALVE SOLENOID
ALT FUNCTION FLASHING LIGHT
TEST/SE RELAY
FIRE WELDING VALVE SOLENOID
BRAKE FEED VALVE SOLENOID
ENGINE CONTROL
BOOSTING AMBER BEACON OPTION
GLOW PLUG RELAY
BEEPER
START RELAY
THROTTLE RELAY
DOWN RELAY
UP RELAY
OIL COOLER FAN
OIL COOLER RELAY
HYDR. GENERATOR SOLENOID
HYDR. GENERATOR STOP SOLENOID
HYDR. GENERATOR STOP RELAY
SMALL PUMP RELAY
SMALL PUMP DUMP VALVE SOLENOID
LARGE PUMP DUMP VALVE SOLENOID
TILT OVERIDE RELAY
TILT OVERIDE SOLENOID
STEER/WHEEL/L RELAY
STEER/WHEEL/L VALVE SOLENOID
2WD SPEED/LARGE PUMP RELAY
CAPACITOR
TIME DELAY #1
REVERSE ALARM SOLENOID
BRAKE RELAY
BRAKE FEED RELAY
FORWARD VALVE SOLENOID
REVERSE VALVE SOLENOID
RIGHT STEERING VALVE SOLENOID
LEFT STEERING VALVE SOLENOID
SMALL PUMP DUMP VALVE SOLENOID
BRAKE DUMP VALVE SOLENOID
CAPACITOR
3RD SPEED RELAY
FORWARD RELAY
REVERSE RELAY
RIGHT RELAY
LEFT RELAY
BRAKE CIRCUIT RELAY
OUTRIGGER HOLDING SOLENOID
OUTRIGGER LEFT SOLENOID VALVE
OUTRIGGER DOUBLE RELAY
OUTRIGGER FRONT RELAY
OUTRIGGER DOUBLE RELAY
OUTRIGGER CONTROL MODULE
LEFT FRONT UP
RIGHT FRONT UP
RIGHT REAR UP
LEFT REAR UP
LEFT FRONT DOWN
RIGHT FRONT DOWN
RIGHT REAR DOWN
LEFT REAR DOWN
TILT OVERIDE SOLENOID/VALVE
TILT
LIFT ENABLE
LEFT REAR DOWN
RIGHT REAR DOWN
OUTRIGGER BRAKE
AUDIO RETRACT
AUDIO LEVEL
OUTRIGGER LIGHT
GROUND
LEFT FRONT UP OUTRIGGER SOLENOID
RIGHT FRONT UP OUTRIGGER SOLENOID
RIGHT FRONT DOWN OUTRIGGER SOLENOID
RIGHT REAR UP OUTRIGGER SOLENOID
RIGHT REAR DOWN OUTRIGGER SOLENOID
LEFT REAR UP OUTRIGGER SOLENOID
LEFT REAR DOWN OUTRIGGER SOLENOID
NEGATIVE
GLOW PLUG
GLOW PLUG
HIGH THROTTLE SOLENOID
ENGINE SHUTDOWN POWER DOWN/SOLENOID RELAY
ENGINE SHUTDOWN
DIESEL VALVE SOLENOID
ENGINE CRANK
ENGINE STOP
INVERTER OPTION
POWER DECK OPTION
HYDRAULIC GENERATOR OPTION
ENGINE CONTROL MODULE
ENGINE SHUTDOWN CONTROLLER
S.O. LIGHT
HOURMETER
ALTERNATOR CHARGE LIGHT
OIL PRESSURE LIGHT
PREHEAT LIGHT
LED 4 ENGINE OFF LIGHT
LED 2 HORN LIGHT
LED 3 POWER LIGHT
HORN
POWER LIGHT
KEY SWITCH OFF/ IGNITION/ PREHEAT
S34 ENABLE
S34A ENABLE
S35 LIFT DOWN
S35A LIFT DOWN
S36 LIFT UP
S36A LIFT UP
S37 ENABLE
S37A ENABLE
S38 LOWER/RAISE
S38A LOWER/RAISE
S39 THROTTLE
S40 THROTTLE
S41 THROTTLE TORQUE
S42 THROTTLE RANGE
JOYSTICK CONTROLLER
S16 3RD SPEED
S15 2WD SPEED
S14 REVERSE
S13 RIGHT
S12 LEFT
S17 JOYSTICK ENABLE
S17A JOYSTICK ENABLE
S18 JOYSTICK ENABLE
S18A JOYSTICK ENABLE
S19 TILT OVERIDE
S19A TILT OVERIDE
S20 TILT CONTROL/ PROPORTIONAL LIMIT SWITCH NORMALLY CLOSED
S21 OUTRIGGER UP LIMIT SWITCHES NORMALLY OPEN/CLOSED
S21A OUTRIGGER DOWN LIMIT SWITCHES NORMALLY CLOSED
S22 OUTRIGGER DOWN IN RETRACTED POSITION
S22A OUTRIGGER DOWN IN RETRACTED POSITION
S23 OUTRIGGER ENABLE
S23A OUTRIGGER ENABLE
S24 OUTRIGGER LIGHT
S25 AUTO LEVEL
S26 FRONT LEFT
S27 FRONT RIGHT
S28 REAR RIGHT
S29 REAR LEFT
S30 FRONT LEFT
S31 FRONT RIGHT
S32 REAR RIGHT
S33 REAR LEFT
S34 OUTRIGGER ENABLE
S35 OUTRIGGER ENABLE
S36 OUTRIGGER ENABLE
S37 OUTRIGGER ENABLE
S38 OUTRIGGER ENABLE
S39 OUTRIGGER ENABLE
S40 OUTRIGGER ENABLE
S41 OUTRIGGER ENABLE
S42 OUTRIGGER ENABLE
S43 OUTRIGGER ENABLE
S44 OUTRIGGER ENABLE
S45 OUTRIGGER ENABLE
S46 OUTRIGGER ENABLE

3.38 Outrigger Wiring Diagram

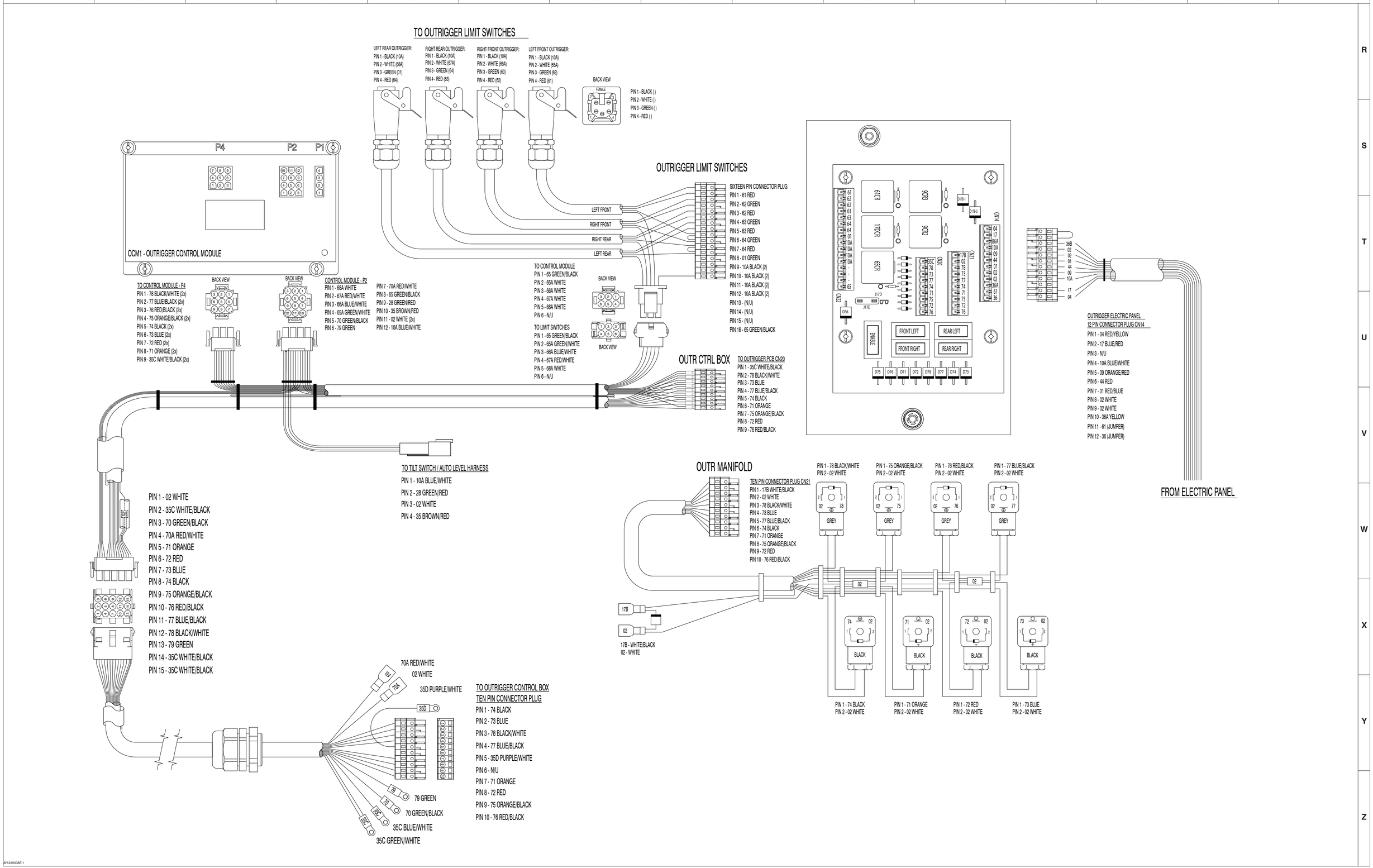

MI134630AE-1

3.39 Electrical Panel Diagram – Oil Cooler Option

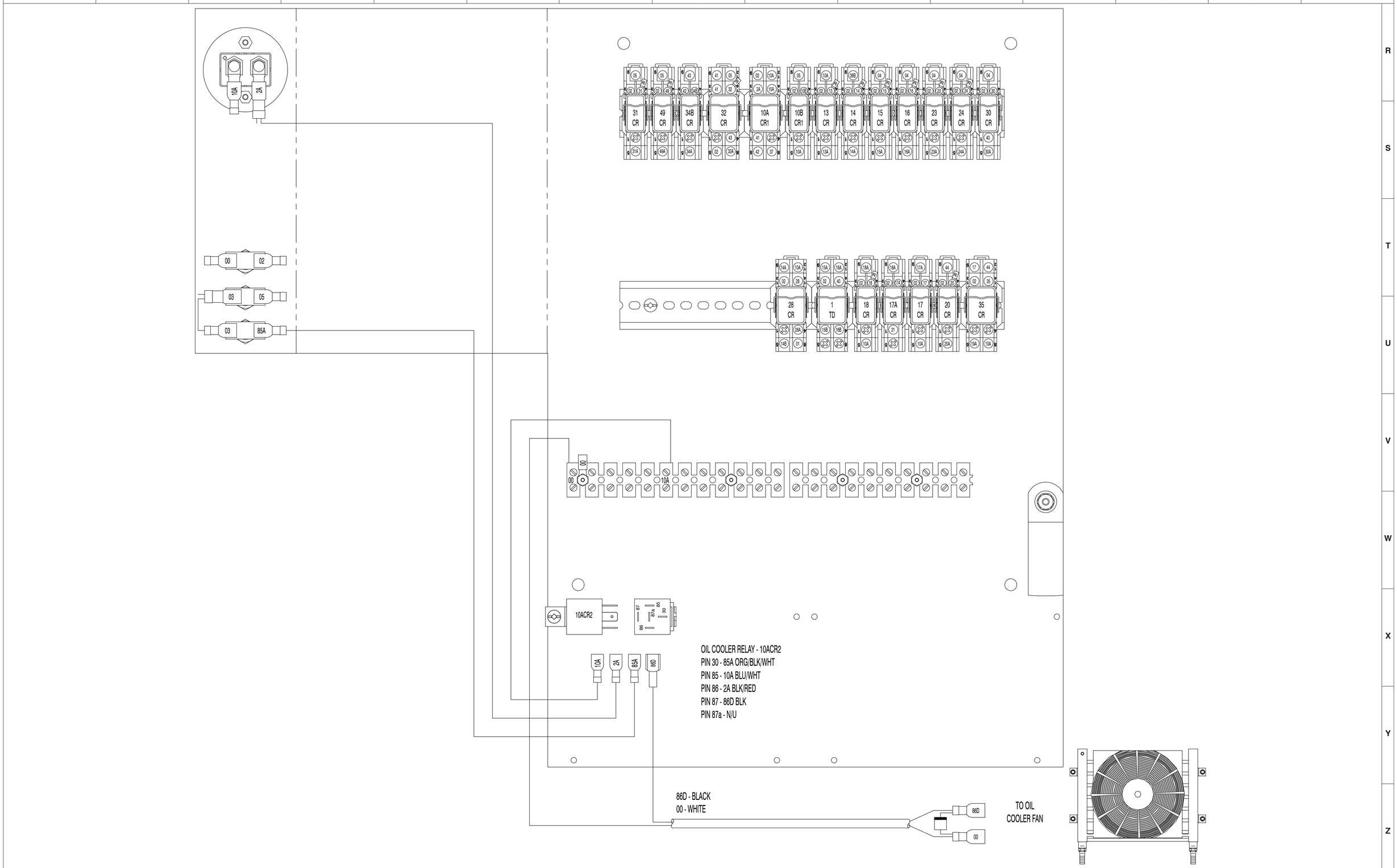

3.40 Hydraulic Generator Electrical Panel Diagram – Kubota Engine (ANSI/CSA)

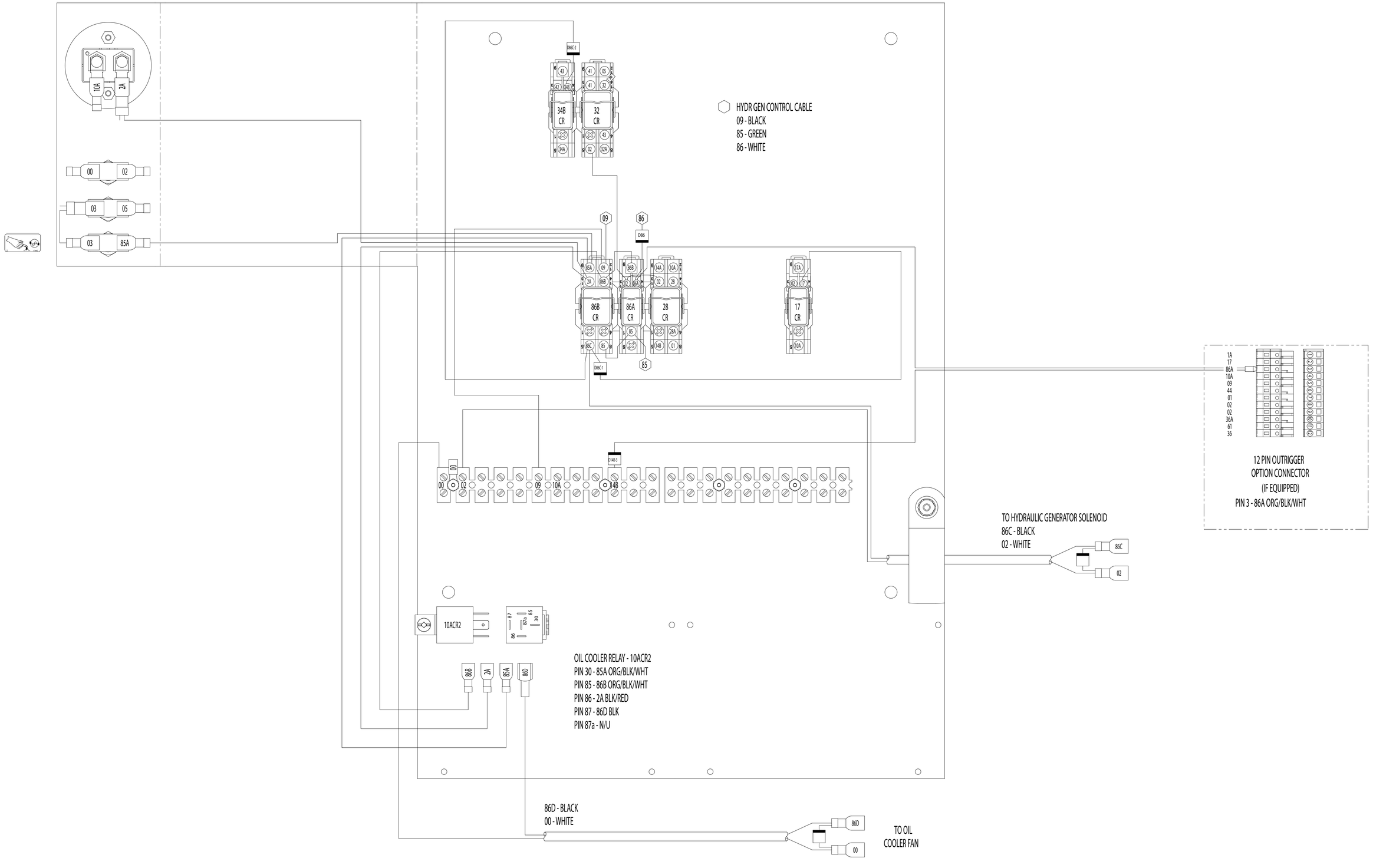

M129438AF

3.40 Hydraulic Generator Electrical Panel Diagram – Kubota Engine (ANSI/CSA)

Section 4 – Troubleshooting Information

4.1 Introduction

The following pages contain a table of Troubleshooting for locating and correcting most service trouble which can develop. Careful and accurate analysis of the systems listed in the table of Troubleshooting will localize the trouble more quickly than any other method. This manual cannot cover all possible troubles and deficiencies that may occur. If a specific trouble is not listed, isolate the major component in which the trouble occurs, isolate whether the problem is electrical or hydraulic, and then isolate and correct the specific problem.

The content of this section is separated into “probable cause” and “remedy.” The information in the left-hand column, preceded by a number, represents the “probable cause.” The information in the right-hand column, in bold text, represents the “remedy” to the “probable cause” directly beside it. See the example below for clarification.

1. Probable cause	**Remedy**

4.2 Electrical System

4.2-1 All Controls Inoperative

1. Battery disconnected or discharged.	**Reconnect battery. Recharge if discharged.**
2. Loose or dirty battery cables.	**Clean and tighten battery cables.**
3. Open or defective main power disconnect switch S1.	**Close switch. Replace if defective.**
4. Loose or broken wire #03 from main power disconnect switch S1 to circuit breaker CB1.	**Check continuity. Replace if defective.**
5. Tripped or defective circuit breaker CB1.	**Reset breaker. Check for defective wiring. Replace breaker if defective.**
6. Loose or broken wire #05 from breaker CB1 to base terminal block TB-1.	**Check continuity. Replace if defective.**
7. Loose or broken wire #05 from base terminal block TB-1 to base engine switch S30.	**Check continuity. Replace if defective.**
8. Loose or broken wire #00 from battery B1 to base terminal block TB-1.	**Check continuity. Replace if defective.**
9. Loose or broken wire #00 from base terminal block TB-1 to circuit breaker CB3.	**Check continuity. Replace if defective.**
10. Tripped or defective circuit breaker CB3.	**Reset breaker. Check for defective wiring. Replace breaker if defective.**
11. Loose or broken wire #02 from circuit breaker CB3 to base terminal block TB-1.	**Check continuity. Replace if defective.**

4.2-2 No Power to Platform (ANSI/CSA)

1. Open or defective base engine switch S30.	**Check switch. Replace if defective.**
2. Loose or broken wire #07 from base engine switch S30 to base terminal block TB-1.	**Check continuity. Replace if defective.**
3. Loose or broken wire #07 from base terminal block TB-1 to emergency stop switch S6.	**Check continuity. Replace if defective.**
4. Open or defective emergency stop switch S6.	**Check switch. Replace if defective.**
5. Loose or broken wire #7A from emergency stop switch S6 to base terminal block TB-1.	**Check continuity. Replace if defective.**
6. Loose or broken wire #7A from base terminal block TB-1 to emergency stop switch S4.	**Check continuity. Replace if defective.**
7. Open or defective emergency stop switch S4.	**Check switch. Replace if defective**

4.2-3 All Functions Inoperative from Platform

1. Loose or broken wire #08 from emergency stop switch S4 to off/lift/drive key switch S3.	**Check continuity. Replace if defective.**
2. Open or defective off/lift/drive key switch S3.	**Check switch. Replace if defective.**
3. Loose or broken wire #10 from off/lift/drive key switch S3 to platform terminal block.	**Check continuity. Replace if defective.**
4. Loose or broken wire #10 from platform terminal block to diode D10 located at the base terminal block TB-1.	**Check continuity. Replace if defective.**
5. Open diode D10 or diode D10 is not connected at base terminal block TB-1.	**Check diode. Replace if defective.**

4.2-4 Engine Does Not Crank from Platform

1. Open or defective key switch S3.	**Check switch. Replace if defective.**
2. Loose or broken wire #10 from key switch S3 to start switch S15.	**Check continuity. Replace if defective.**
3. Defective start switch S15.	**Check switch. Replace if defective.**
4. Loose or broken wire #32 from start switch S15 to relay 32CR.	**Check continuity. Replace if defective.**
5. Defective relay 32CR.	**Check relay. Replace if defective.**
6. Loose or broken wire #41 from relay 32CR to relay 10ACR1.	**Check continuity. Replace if defective.**
7. Loose or broken wire #02 from relay 10ACR to base terminal block.	**Check continuity. Replace if defective.**
8. Loose or broken wire #05 from base terminal block to relay 32CR.	**Check continuity. Replace if defective.**
9. Loose or broken wire #32A from relay 32CR to starter contactor 32ACR.	**Check continuity. Replace if defective.**
10. Defective starter contactor 32ACR.	**Check contactor. Replace if defective.**
11. Loose or broken wire #00 from starter contactor 32ACR to engine ground.	**Check continuity. Replace if defective.**
12. Loose or broken wire #103 from main power disconnect switch S1 to starter contactor 32ACR. (Kubota Diesel)	**Check continuity. Replace if defective.**
13. Loose or broken wire #103 from main power disconnect switch S1 to starter contactor 32BCR. (GM Dual Fuel)	**Check continuity. Replace if defective.**
14. Loose or broken wire #104 from starter contactor 32ACR to starter motor. (Kubota Diesel)	**Check continuity. Replace if defective.**

15. Defective starter motor.	**Check motor. Repair or replace if defective.**

4.2-5 Engine Does Not Crank from Base Controls (Kubota diesel)

1. Loose or broken wire #05 from base terminal block to base engine switch S30.	**Check continuity. Replace if defective.**
2. Loose or broken jumper wire #05 on base engine switch S30.	**Check continuity. Replace if defective.**
3. Defective engine start switch S30.	**Check switch. Replace if defective.**
4. Loose or broken wire #32A from engine start switch S30 to starter contactor 32ACR.	**Check continuity. Replace if defective.**

4.2-6 Engine Cranks but Stops Cranking after a few seconds

1. Loose or broken jumper wire #41 on relay 32CR.	**Check continuity. Replace if defective.**
2. Loose or broken wire #02 from relay 32CR to base terminal block TB-1.	**Check continuity. Replace if defective**

4.2-7 Glow Plugs Inoperative from Engine Controls

1. Loose or broken wire #07 from engine start switch S30 to glow plug switch S31.	**Check continuity. Replace if defective.**
2. Defective glow plug switch S31.	**Check switch. Replace if defective.**
3. Loose or broken wire #31A from glow plug switch S31 to glow plug relay 31ACR.	**Check continuity. Replace if defective.**
4. Loose or broken wire #02 from glow plug relay 31ACR to base terminal block TB1.	**Check continuity. Replace if defective.**
5. Loose or broken wire #103 from starter solenoid 32ACR to relay 31ACR.	**Check continuity. Replace if defective.**
6. Loose or broken wire #91A from relay 31ACR to engine glow plugs EGP1.	**Check continuity. Replace if defective.**
7. Defective glow plug relay 31ACR.	**Check relay. Replace if defective.**
8. Defective glow plugs.	**Check glow plugs. Replace if defective.**

4.2-8 Glow Plugs Inoperative from Platform (Additional)

1. Loose or broken wire #10 from key selector switch S3 to glow plug switch S13.	**Check continuity. Replace if defective.**
2. Defective glow plug switch S13.	**Check switch. Replace if defective.**

3. Loose or broken wire #31 from glow plug switch S13 to glow plug relay 31CR.	**Check continuity. Replace if defective.**
4. Loose or broken wire #02 from relay 31CR to base terminal block TB1.	**Check continuity. Replace if defective.**
5. Loose or broken wire #05 from base terminal block TB1 to relay 31CR.	**Check continuity. Replace if defective.**
6. Loose or broken wire #31A from relay 31CR to glow plug relay 31ACR.	**Check continuity. Replace if defective.**
7. Defective relay 31CR.	**Check relay. Replace if defective.**

4.2-9 Engine Cranks but Does Not Start (Kubota diesel)

1. Loose or broken wire #37 from base terminal block to diesel valve solenoid 2D37.	**Check continuity. Replace if defective.**
2. Loose or broken wire #57 from starter contactor 32ACR to diesel valve solenoid 2D37.	**Check continuity. Replace if defective.**
3. Defective fuel valve solenoid 2D37.	**Check solenoid. Replace if defective.**
4. Defective glow plug circuit.	**See glow plugs inoperative above. Repair if necessary.**

4.2-10 High Throttle Inoperative

1. Loose or broken wire #10 from key switch S3 to high/low throttle switch S14.	**Check continuity. Replace if defective.**
2. Defective high/low throttle switch S14.	**Check switch. Replace if defective.**
3. Loose or broken wire #34 from high/low throttle switch S14 to diode D34 at relay 34BCR. (ANSI/CSA only)	**Check continuity. Replace if defective.**
4. Loose or broken wire #34 from high/low throttle switch S14 to diode D34 at base terminal block TB-1. (CE only)	**Check continuity. Replace if defective.**
5. Open or loose diode D34.	**Check diode. Replace if defective.**
6. Loose or broken wire #34B from base terminal block TB-1 to relay 34BCR. (CE only)	**Check continuity. Replace if defective.**
7. Defective relay 34BCR.	**Check relay. Replace if defective.**
8. Loose or broken wire #42 from relay 34BCR to relay 10ACR1.	**Check continuity. Replace if defective.**
9. Defective relay 10ACR1.	**Check relay. Replace if defective.**
10. Loose or broken wire #02 from relay 10ACR1 to base terminal block TB1.	**Check continuity. Replace if defective.**

11. Loose or broken wire #05 from base terminal block TB1 to relay 32CR.	**Check continuity. Replace if defective.**
12. Defective relay 32CR.	**Check relay. Replace if defective.**
13. Loose or broken wire #43 from relay 32CR to relay 34BCR.	**Check continuity. Replace if defective.**
14. Loose or broken wire #34A from relay 34BCR to engine harness plug.	**Check continuity. Replace if defective.**
15. Loose or broken wire #34A from engine harness plug to high throttle solenoid HTS-34A. (Kubota Diesel)	**Check continuity. Replace if defective.**

4.2-11 Drive and Steer Inoperative (Machines without outriggers option)

1. Key switch S3 in lift position.	**Turn switch to drive position.**
2. Defective drive contacts in key switch S3.	**Check contacts. Replace if defective.**
3. Loose or broken wire #12 from key switch S3 to joystick enable switch S7-7.	**Check continuity. Replace if defective.**
4. Defective joystick enable switch S7-7.	**Check switch. Replace if defective.**
5. Loose or broken wire #12A from joystick enable relay 12BCR to speed, steer and direction switches S7-1 to S7-6.	**Check continuity. Replace if defective.**
6. Loose or broken wire #12B from joystick enable switch S7-7 to controller enable relay 12BCR.	**Check continuity. Replace if defective.**
7. Defective joystick enable relay 12BCR.	**Check continuity. Replace if defective.**
8. Loose or broken wire #02 from joystick enable relay 12BCR to joystick harness.	**Check continuity. Replace if defective.**
9. Loose or broken wire #10A from base terminal block to relay 28CR.	**Check continuity. Replace if defective.**
10. Defective relay 28CR.	**Check relay. Replace if defective.**
11. Loose or broken jumper wire from #1 on relay 28CR to #4 on relay 30CR.	**Check continuity. Replace if defective.**

4.2-12 Drive and Steer Inoperative (machines with outriggers option)

1. Outriggers not fully retracted	**Fully retract outrigger cylinders**
2. Key switch S3 in lift position.	**Turn switch to drive position.**
3. Defective drive contacts in key switch S3.	**Check contacts. Replace if defective.**
4. Loose or broken wire #12 from key switch S3 to joystick enable switch S7-7.	**Check continuity. Replace if defective.**

5. Defective joystick enable switch S7-7.	**Check switch. Replace if defective.**
6. Loose or broken wire #12A from joystick enable relay 12BCR to speed, steer and direction switches S7-1 to S7-6.	**Check continuity. Replace if defective.**
7. Loose or broken wire #12B from joystick enable switch S7-7 to joystick enable relay 12BCR.	**Check continuity. Replace if defective.**
8. Defective joystick enable relay 12BCR.	**Check continuity. Replace if defective.**
9. Loose or broken wire #02 from joystick enable relay 12BCR to controller harness.	**Check continuity. Replace if defective.**
10. Loose or broken wire #10A from base terminal block to relay 28CR.	**Check continuity. Replace if defective.**
11. Defective relay 28CR.	**Check relay. Replace if defective.**
12. Loose or broken wire #1 from relay 28CR to pin #7 on connector CN14 at the outrigger board.	**Check continuity. Replace if defective.**
13. Left rear outrigger limit switch LS64 is out of adjustment or defective.	**Check continuity through switch. Adjust switch if out of adjustment. Replace if defective.**
14. Right rear outrigger limit switch LS63 is out of adjustment or defective.	**Check continuity through switch. Adjust switch if out of adjustment. Replace if defective.**
15. Right front outrigger limit switch LS62 is out of adjustment or defective.	**Check continuity through switch. Adjust switch if out of adjustment. Replace if defective.**
16. Left front outrigger limit switch LS61 is out of adjustment or defective.	**Check continuity through switch. Adjust switch if out of adjustment. Replace if defective.**
17. Defective drive enable relay 61CR.	**Check relay. Replace if defective.**
18. Loose or broken wire #4 from pin #1 on connector CN14 at the outrigger board to relay 30CR.	**Check continuity. Replace if defective.**

4.2-13 Brakes Do Not Release

1. Loose or broken wire #30 from diodes D15A-2 and D16A-2 to relay 30CR.	**Check continuity. Replace if defective.**
2. Defective relay 30CR.	**Check relay. Replace if defective.**
3. Loose or broken wire #02 from relay 30CR to base terminal block TB-1.	**Check continuity. Replace if defective.**
4. Loose or broken wire #10A from base terminal block to relay 30CR.	**Check continuity. Replace if defective.**
5. Loose or broken wire #30A from relay 30CR to base terminal block TB-1.	**Check continuity. Replace if defective.**
6. Loose or broken wire #30A from base terminal block TB-1 to brake feed valve 2H-30A-2.	**Check continuity. Replace if defective.**

7. Defective valve coil brake feed 2H-30A-2.	**Check continuity through coil. Replace if defective.**
8. Loose or broken wire #02 from valve coil brake feed 2H-30A-2 to base terminal block TB-1.	**Check continuity. Replace if defective.**
9. Open diode D30.	**Check diode. Replace if defective.**
10. Loose or broken wire #25 from diode D30 to base terminal block TB-1.	**Check continuity. Replace if defective.**
11. Loose or broken wire #25 from base terminal block TB-1 to quick brake valve coil 2H-25.	**Check continuity. Replace if defective.**
12. Defective brake dump valve coil 2H-25.	**Check continuity through coil. Replace if defective.**
13. Loose or broken wire #02 from quick brake valve 2H-25 to base terminal block TB-1.	**Check continuity. Replace if defective.**

4.2-14 Steer Right Inoperative

1. Defective steer right switch S7-2 in joystick S7.	**Check switch. Replace if defective.**
2. Loose or broken wire #23 from steer right switch S7-2 to platform terminal block.	**Check continuity. Replace if defective.**
3. Loose or broken wire #23 from platform terminal block to relay 23CR.	**Check continuity. Replace if defective.**
4. Defective relay 23CR.	**Check relay. Replace if defective.**
5. Loose or broken wire #04 from base terminal block to relay 23CR.	**Check continuity. Replace if defective.**
6. Loose or broken wire #23A from relay 23CR to base terminal block.	**Check continuity. Replace if defective.**
7. Loose or broken wire #02 from relay 23CR to base terminal block.	**Check continuity. Replace if defective.**
8. Loose or broken wire #23A from base terminal block to steer right valve coil 4H-23A.	**Check continuity. Replace if defective.**
9. Defective steer right valve coil 4H-23A.	**Check coil. Replace if defective.**
10. Loose or broken wire #02 from steer right valve coil 4H-23A to base terminal block.	**Check continuity. Replace if defective.**
11. Open diode D23A.	**Check diode. Replace if defective.**

4.2-15 Steer Left Inoperative

1. Defective steer left switch S7-3 in joystick S7.	**Check switch. Replace if defective.**
2. Loose or broken wire #24 from steer left switch S7-3 to platform terminal block.	**Check continuity. Replace if defective.**

3. Loose or broken wire #24 from platform terminal block to relay 24CR.	**Check continuity. Replace if defective.**
4. Defective relay 24CR.	**Check relay. Replace if defective.**
5. Loose or broken wire #04 from base terminal block to relay 24CR.	**Check continuity. Replace if defective.**
6. Loose or broken wire #24A from relay 24CR to base terminal block.	**Check continuity. Replace if defective.**
7. Loose or broken wire #02 from relay 24CR to base terminal block.	**Check continuity. Replace if defective.**
8. Loose or broken wire #24A from base terminal block to steer left valve coil 4H-24A.	**Check continuity. Replace if defective.**
9. Defective steer left valve coil 4H-24A.	**Check coil. Replace if defective.**
10. Loose or broken wire #02 from steer left valve coil 4H-24A to base terminal block.	**Check continuity. Replace if defective.**
11. Open diode D24A.	**Check diode. Replace if defective**

4.2-16 Reverse Drive Inoperative

1. Defective drive reverse switch S7-4 in joystick S7.	**Check switch. Replace if defective.**
2. Defective joystick S7.	**Check joystick. Replace if defective.**
3. Loose or broken wire #15 from joystick S7 to platform terminal block.	**Check continuity. Replace if defective.**
4. Loose or broken wire #15 from platform terminal block to relay 15CR.	**Check continuity. Replace if defective.**
5. Defective relay 15CR.	**Check relay. Replace if defective.**
6. Loose or broken wire #02 from relay 15CR to base terminal block.	**Check continuity. Replace if defective.**
7. Loose or broken wire #04 from base terminal block to relay 15CR.	**Check continuity. Replace if defective.**
8. Loose or broken wire #15A from relay 15CR to time delay relay 1TD.	**Check continuity. Replace if defective.**
9. Defective time delay relay 1TD.	**Check relay. Replace if defective.**
10. Loose or broken wire #15B from time delay relay 1TD to reverse valve coil 4H-15B.	**Check continuity. Replace if defective.**
11. Defective reverse valve coil 4H-15B.	**Check coil. Replace if defective.**
12. Loose or broken wire #02 from reverse valve coil 4H-15B to base terminal block.	**Check continuity. Replace if defective.**
13. Open diode D15A-1 or D15A-2.	**Check diodes. Replace if defective.**

4.2-17 Forward Drive Inoperative

1. Defective drive forward switch S7-5 in joystick S7.	**Check switch. Replace if defective.**
2. Defective joystick S7.	**Check joystick. Replace if defective.**
3. Loose or broken wire #16 from joystick S7 to platform terminal block.	**Check continuity. Replace if defective.**
4. Loose or broken wire #16 from platform terminal block to relay 16CR.	**Check continuity. Replace if defective.**
5. Defective relay 16CR.	**Check relay. Replace if defective.**
6. Loose or broken wire #02 from relay 16CR to base terminal block.	**Check continuity. Replace if defective.**
7. Loose or broken wire #04 from base terminal block to relay 16CR.	**Check continuity. Replace if defective.**
8. Loose or broken wire #16A from relay 16CR to time delay relay 1TD.	**Check continuity. Replace if defective.**
9. Defective time delay relay 1TD.	**Check relay. Replace if defective.**
10. Loose or broken wire #16B from time delay relay 1TD to forward valve coil 4H-16B.	**Check continuity. Replace if defective.**
11. Defective forward valve coil 4H-16B.	**Check coil. Replace if defective.**
12. Loose or broken wire #02 from forward valve coil 4H-16B to base terminal block.	**Check continuity. Replace if defective.**
13. Open diode D16A-1 or D16A-2.	**Check diodes. Replace if defective.**

4.2-18 First Drive Speed and Steering Inoperative

1. Loose or broken wire #21 from base terminal block to relay 17ACR.	**Check continuity. Replace if defective.**
2. Defective relay 17ACR.	**Check relay. Replace if defective.**
3. Loose or broken wire #18A from relay 17ACR to small pump dump valve solenoid 2H-18A.	**Check continuity. Replace if defective.**
4. Defective small pump dump valve coil 2H-18A.	**Check coil. Replace if defective.**
5. Loose or broken wire #02 from small pump dump solenoid 2H-18A to base terminal block.	**Check continuity. Replace if defective.**

4.2-19 Second Drive Speed Inoperative

1. Defective second speed switch S7-1 in joystick S7.	**Check switch. Replace if defective.**
2. Defective joystick S7.	**Check joystick. Replace if defective.**

3. Loose or broken wire #19 from controller S7-1 to platform terminal block.	**Check continuity. Replace if defective.**
4. Loose or broken wire #19 from platform terminal block to diode D19 at relay 35CR.	**Check continuity. Replace if defective.**
5. Loose or Open diode D19.	**Tighten diode. Check diode. Replace if defective.**
6. Loose or broken wire #10A from base terminal block to high drive/tilt override limit switch LS5.	**Check continuity. Replace if defective.**
7. Misadjusted or defective high drive/tilt override limit switch LS5.	**Adjust switch. Replace if defective.**
8. Loose or broken wire #35 from high drive/tilt override limit switch LS5 to base terminal block.	**Check continuity. Replace if defective.**
9. Loose or broken wire #35 from base terminal block to relay 35CR.	**Check continuity. Replace if defective.**
10. Loose or broken wire #02 from relay 35CR to base terminal block.	**Check continuity. Replace if defective.**
11. Defective relay 35CR.	**Check relay. Replace if defective.**
12. Loose or broken wire #17 from relay 35CR to relay 17CR.	**Check continuity. Replace if defective.**
13. Defective relay 17CR.	**Check relay. Replace if defective.**
14. Loose or broken wire #02 from relay 17CR to base terminal block.	**Check continuity. Replace if defective.**
15. Loose or broken wire #10A from base terminal block to relay 17CR.	**Check continuity. Replace if defective.**
16. Loose or broken wire #17A from relay 17CR to base terminal block.	**Check continuity. Replace if defective.**
17. Loose or broken wire #17A from relay 17CR to relay 17ACR.	**Check continuity. Replace if defective.**
18. Defective relay 17ACR.	**Check relay. Replace if defective.**
19. Loose or broken wire #02 from relay 17ACR to base terminal block.	**Check continuity. Replace if defective.**
20. Loose or broken wire #17A from base terminal block to large pump dump valve solenoid 2H-17A.	**Check continuity. Replace if defective.**
21. Loose or broken wire #02 from large pump dump valve solenoid 2H-17A to base terminal block.	**Check continuity. Replace if defective.**
22. Defective large pump dump valve solenoid 2H-17A.	**Check solenoid. Replace if defective.**

4.2-20 Third Drive Speed Inoperative

1. High/Low torque switch S41 in high torque position or defective.	**Turn high/low torque switch to low torque position. Replace if defective.**
2. Defective third speed switch S7-6 in joystick S7.	**Check switch. Replace if defective.**
3. Defective joystick S7.	**Check joystick. Replace if defective.**
4. Loose or broken wire #18B from controller S7-6 to low/high torque switch S41.	**Check continuity. Replace if defective.**
5. Loose or broken wire #18 from low/high torque switch S41 to platform terminal block.	**Check continuity. Replace if defective.**
6. Loose or broken wire #18 from platform terminal block to relay 18CR.	**Check continuity. Replace if defective.**
7. Defective relay 18CR.	**Check relay. Replace if defective.**
8. Loose or broken wire #02 from relay 18CR to base terminal block.	**Check continuity. Replace if defective.**
9. Loose or broken wire #10A from base terminal block to relay 18CR.	**Check continuity. Replace if defective.**
10. Loose or broken wire #18A from relay 18CR to small pump dump valve 2H-18A.	**Check continuity. Replace if defective.**
11. Loose or broken wire #02 from small pump dump valve 2H-18A to base terminal block.	**Check continuity. Replace if defective.**
12. Defective small pump dump valve solenoid 2H-18A.	**Check solenoid. Replace if defective**

4.2-21 High/Low Range Speed Inoperative

1. Loose or broken wire #12 from joystick enable switch S7-7 to high/low range switch S29.	**Check continuity. Replace if defective.**
2. Defective high/low range switch S29.	**Check switch. Replace if defective.**
3. Loose or broken wire #20B from high/low range switch S29 to high/low torque switch S41.	**Check continuity. Replace if defective.**
4. Defective high/low torque switch S41.	**Check switch. Replace if defective.**
5. Loose or broken wire #20 from high/low torque switch S41 to relay 20CR.	**Check continuity. Replace if defective.**
6. Defective relay 20CR.	**Check relay. Replace if defective.**
7. Loose or broken wire #02 from relay 20CR to base terminal block.	**Check continuity. Replace if defective.**
8. Loose or broken wire #10A from base terminal block to relay 35CR.	**Check continuity. Replace if defective.**

9. Defective relay 35CR.	**Check relay. Replace if defective.**
10. Loose or broken wire #44 from relay 35CR to relay 20CR.	**Check continuity. Replace if defective.**
11. Loose or broken wire #20A from relay 20CR to base terminal block TB-1.	**Check continuity. Replace if defective.**
12. Loose or broken wire #20A from base terminal block to series parallel valve coil 3H-20A.	**Check continuity. Replace if defective.**
13. Defective series/parallel valve coil 3H-20A.	**Check coil. Replace if defective.**
14. Loose or broken wire #02 from series/parallel valve coil 3H-20A to base terminal block.	**Check continuity. Replace if defective.**

4.2-22 Up Circuit Inoperative from Platform or Base (machines without outriggers)

1. Lift/Off/Drive switch S3 in drive position or defective.	**Select lift position. Check switch. Replace if defective.**
2. Loose or broken wire #09 from off/lift/drive switch S3 to lift enable switch S9.	**Check continuity. Replace if defective.**
3. Defective lift enable switch S9.	**Check switch. Replace if defective.**
4. Loose or broken wire #9A from lift enable switch S9 to up/off/down switch S5.	**Check continuity. Replace if defective.**
5. Defective up/off/down switch S5.	**Check switch. Replace if defective.**
6. Loose or broken wire #14 from up/off/down switch S5 to base terminal block TB-1. (ANSI/ CSA)	**Check continuity. Replace if defective.**
7. Loose or broken wire #14 from base terminal block to relay 14CR.	**Check continuity. Replace if defective.**
8. Loose or broken wire #02 from relay 14CR to base terminal block TB-1.	**Check continuity. Replace if defective.**
9. Defective relay 14CR.	**Check relay. Replace if defective.**
10. Loose or broken jumper wire from #10A to #36A on base terminal block TB-1.	**Check continuity. Replace if defective.**
11. Loose or broken wire #36A from terminal block TB-1 to end of stroke limit switch LS4.	**Check continuity. Replace if defective.**
12. Defective end of stroke limit switch LS4.	**Check switch. Replace if defective.**
13. Loose or broken wire #36B from end of stroke limit switch LS4 to relay 14CR.	**Check continuity. Replace if defective.**
14. Loose or broken wire #14A from relay 14CR to relay 28CR.	**Check continuity. Replace if defective.**
15. Loose or broken wire #14B from relay 28CR to base terminal block TB-1.	**Check continuity. Replace if defective.**

16. Loose or broken wire #14B from base terminal block to lift valve solenoid 2H-14B.	**Check continuity. Replace if defective.**
17. Loose or broken wire #02 from lift valve solenoid 2H-14B to base terminal block.	**Check continuity. Replace if defective.**
18. Defective lift valve solenoid 2H-14B.	**Check solenoid. Replace if defective.**
19. Open diode D14B-1.	**Check diode. Replace if defective**

4.2-23 Up Circuit Inoperative from Base

1. Loose or broken wire #10A from base terminal block to base enable switch S10.	**Check continuity. Replace if defective.**
2. Defective base enable switch S10.	**Check switch. Replace if defective.**
3. Loose or broken wire #10E from base enable switch S10 to base up/down switch S2.	**Check continuity. Replace if defective.**
4. Defective base up/down switch S2.	**Check switch. Replace if defective.**
5. Loose or broken wire #14 from base up/down switch S2 to base terminal block TB-1.	**Check continuity. Replace if defective.**

4.2-24 Platform Does Not Lift from Platform or Base Controls with Outriggers Retracted (Lift Operates Correctly with Outriggers Extended)

1. Outriggers not fully retracted.	**Fully retract outrigger cylinders.**
2. Loose or broken wire #1 from relay 28CR (ANSI/CSA) or 28CR1 (CE) to pin #7 on connector CN14 at the outrigger board.	**Check continuity. Replace if defective.**
3. Loose or broken wire #1 from outrigger board to outrigger limit switch LS64.	**Check continuity. Replace if defective.**
4. Defective outrigger limit switch LS64.	**Check switch. Replace if defective.**
5. Loose or broken wire #64 from outrigger limit switch LS64 to outrigger board.	**Check continuity. Replace if defective.**
6. Loose or broken wire #64 from outrigger board to outrigger limit switch LS63.	**Check continuity. Replace if defective.**
7. Defective outrigger limit switch LS63.	**Check continuity. Replace if defective.**
8. Loose or broken wire #63 from outrigger limit switch LS63 to outrigger board.	**Check continuity. Replace if defective.**
9. Loose or broken wire #63 from outrigger board to outrigger limit switch LS62.	**Check continuity. Replace if defective.**
10. Defective Limit Switch LS62.	**Check switch. Replace if defective.**
11. Loose or broken wire #62 from outrigger limit switch LS62 to outrigger board.	**Check continuity. Replace if defective.**

12. Loose or broken wire #62 from outrigger board to outrigger limit switch LS61.	**Check continuity. Replace if defective.**
13. Defective outrigger limit switch LS61.	**Check switch. Replace if defective.**
14. Loose or broken wire #61 from outrigger limit switch LS61 to outrigger board .	**Check continuity. Replace if defective.**
15. Open diode D36 on outrigger board.	**Check diode. Replace if defective.**

4.2-25 Platform Does Not Lift from Platform or Base Controls with Outriggers Extended

1. Outriggers not extended enough.	**Extend outriggers to take weight off tires (refer to operator section).**
2. Loose or broken wire #10A from terminal block TB-1 to pin #4 on connector CN14 at the outrigger board.	**Check continuity. Replace if defective.**
3. Loose or broken wire #10A from outrigger board to outrigger limit switch LS68.	**Check continuity. Replace if defective.**
4. Defective outrigger limit switch LS68.	**Check switch. Replace if defective.**
5. Loose or broken wire #68A from outrigger limit switch LS68 to outrigger control module at pin P2-1.	**Check continuity. Replace if defective.**
6. Loose or broken wire #10A from outrigger board to outrigger limit switch LS67.	**Check continuity. Replace if defective.**
7. Defective outrigger limit switch LS67.	**Check switch. Replace if defective.**
8. Loose or broken wire #67A from outrigger limit switch LS67 to outrigger control module at pin P2-2.	**Check continuity. Replace if defective.**
9. Loose or broken wire #10A from outrigger board to outrigger limit switch LS66.	**Check continuity. Replace if defective.**
10. Defective outrigger limit switch LS66.	**Check switch. Replace if defective.**
11. Loose or broken wire #66A from outrigger limit switch LS66 to outrigger control module at pin P2-3.	**Check continuity. Replace if defective.**
12. Loose or broken wire #10A from outrigger board to outrigger limit switch LS65.	**Check continuity. Replace if defective.**
13. Defective outrigger limit switch LS65.	**Check switch. Replace if defective.**
14. Loose or broken wire #65A from outrigger limit switch LS65 to outrigger control module at pin P2-4.	**Check continuity. Replace if defective.**
15. Check for power on wire #65 at outrigger control module at pin P2-8.	**If no voltage present, proceed to outrigger control module troubleshooting.**

16. Loose or broken wire #65 from outrigger control module at pin P2-8 to outrigger board CN22 pin #16.	**Check continuity. Replace if defective.**
17. Defective lift enable relay 65CR.	**Check relay. Replace if defective.**
18. Defective lift disable relay 17DCR.	**Check relay. Replace if defective.**
19. Loose or broken wire #36A from pin #10 on connector CN14 at the outrigger board to terminal block TB-1.	**Check continuity. Replace if defective.**
20. Loose or broken wire #36A from terminal block TB-1 to end of stroke limit switch LS4.	**Check continuity. Replace if defective.**
21. Defective end of stroke limit switch LS4.	**Check switch. Replace if defective.**
22. Loose or broken wire #36B from end of stroke limit switch LS4 to relay 14CR.	**Check continuity. Replace if defective.**
23. Defective relay 14CR.	**Check relay. Replace if defective.**
24. Loose or broken wire #14A from relay 14CR to relay 28CR.	**Check continuity. Replace if defective.**
25. Loose or broken wire #14B from relay 28CR to base terminal block.	**Check continuity. Replace if defective.**
26. Loose or broken wire #14B from base terminal block to lift valve solenoid 2H-14B.	**Check continuity. Replace if defective.**
27. Loose or broken wire #02 from lift valve solenoid 2H-14B to base terminal block.	**Check continuity. Replace if defective.**
28. Defective lift valve solenoid 2H-14B.	**Check solenoid. Replace if defective.**

4.2-26 Down Circuit Inoperative from Platform or Base

1. Lift/Off/Drive switch S3 in drive position or defective.	**Select lift position. Check switch. Replace if defective.**
2. Loose or broken wire #09 from lift/off/drive switch S3 to lift enable switch S9.	**Check continuity. Replace if defective.**
3. Defective lift enable switch S9.	**Check switch. Replace if defective.**
4. Loose or broken wire #9A from enable switch S9 to up/down switch S5.	**Check continuity. Replace if defective.**
5. Defective up/down switch S5.	**Check switch. Replace if defective.**
6. Loose or broken wire #13 from up/down switch S5 to base terminal block TB-1. (ANSI/CSA)	**Check continuity. Replace if defective.**
7. Loose or broken wire #13 from base terminal block to relay 13CR.	**Check continuity. Replace if defective.**
8. Loose or broken wire #02 from relay 13CR to base terminal block.	**Check continuity. Replace if defective.**

9. Defective relay 13CR.	**Check relay. Replace if defective.**
10. Loose or broken wire #10A from base terminal block to relay 13CR.	**Check continuity. Replace if defective.**
11. Loose or broken wire #13A from relay 13CR to base terminal block.	**Check continuity. Replace if defective.**
12. Loose or broken wire #13A from base terminal block to holding valve solenoid 2H-13A-1 or 2H-13A-2.	**Check continuity. Replace if defective.**
13. Loose or broken wire #02 from holding valve solenoid 2H-13A-1 or 2H-13A-2 to base terminal block TB-1.	**Check continuity. Replace if defective.**
14. Defective holding valve solenoid 2H-13A-1 or 2H-13A-2.	**Check solenoid. Replace if defective.**
15. Loose or broken wire #13A from base terminal block to lowering valve solenoid 2H-13A.	**Check continuity. Replace if defective.**
16. Loose or broken wire #02 from lowering valve solenoid 2H-13A to base terminal block.	**Check continuity. Replace if defective.**
17. Defective lowering valve solenoid 2H-13A.	**Check solenoid. Replace if defective.**

4.2-27 Down Circuit Inoperative from Base

1. Loose or broken wire #10A from base terminal block to base enable switch S10.	**Check continuity. Replace if defective.**
2. Defective base enable switch S10.	**Check switch. Replace if defective.**
3. Loose or broken wire #10E from base enable switch S10 to base up/down switch S2.	**Check continuity. Replace if defective.**
4. Defective base up/down switch S2.	**Check switch. Replace if defective.**
5. Loose or broken wire #13 from base up/down switch S2 to base terminal block TB-1.	**Check continuity. Replace if defective.**

4.2-28 Powered Extension Platform Inoperative

1. Loose or broken battery cable from main power disconnect switch S1 to fuse F2 (100 Amp).	**Check continuity. Replace if defective.**
2. Open fuse F2.	**Check fuse. Replace if open.**
3. Loose or broken battery cable #103A from fuse F2 to contactor 9CR1.	**Check continuity. Replace if defective.**
4. Defective contactor 9CR1.	**Check contactor. Replace if defective.**
5. Loose or broken battery cable #103B from contactor 9CR1 to motor contactor 99CR.	**Check continuity. Replace if defective.**

6. Defective motor contactor 99CR.	**Check contactor. Replace if defective.**
7. Loose or broken wire #103B from battery cable #103B to fuse F5.	**Check continuity. Replace if defective.**
8. Defective fuse F5.	**Check fuse. Replace if defective.**
9. Loose or broken wire #103C from fuse F5 to powered platform enable switch S34 or S34A.	**Check continuity. Replace if defective.**
10. Loose or broken wire #103D from enable switch S34or S34A to platform extend retract switch S11 or S11A.	**Check continuity. Replace if defective.**
11. Defective platform extend/retract switch S11 or S11A.	**Check switch. Replace if defective.**
12. Defective platform enable switch S34 or S34A.	**Check switch. Replace if defective.**
13. Loose or broken battery cable #00 from platform power unit DCM1 to battery B1.	**Check continuity. Replace if defective.**
14. Defective platform power unit DCM1.	**Check power unit. Repair or replace if defective**

4.2-29 Powered Extension Platform Does Not Extend

1. Defective platform extend/retract switch S11 or S11A.	**Check switch. Replace if defective.**
2. Loose or broken wire #26 or #26A from platform extend/retract switch S11 or S11Ato platform extend valve coil 4H-26 or 4H-26A.	**Check continuity. Replace if defective.**
3. Open diode D26 or D26A.	**Check diode. Replace if defective.**
4. Defective platform extend valve coil 4H-26 or 4H-26A.	**Check coil. Replace if defective.**
5. Loose or broken wire #00 from platform extend valve coil 4H-26 or 4H-26A to battery cable #00.	**Check continuity. Replace if defective.**

4.2-30 Powered Extension Platform Does Not Retract

1. Defective platform extend/retract switch S11 or S11A.	**Check switch. Replace if defective.**
2. Loose or broken wire #27 or #27A from platform extend/retract switch S11 or S11A to platform retract valve coil 4H-27 or 4H-27A.	**Check continuity. Replace if defective.**
3. Open diode D27 or D27A.	**Check diode. Replace if defective.**
4. Defective platform retract valve coil 4H-27 or 4H-27A.	**Check coil. Replace if defective.**
5. Loose or broken wire #00 from platform retract valve coil 4H-27 or 4H-27A to battery cable #00.	**Check continuity. Replace if defective.**

4.2-31 Hydraulic Generator Inoperative

1. Key switch S3 in drive position.	**Turn switch to lift position.**
2. Loose or broken wire #9 from base terminal block TB-1 to generator relay 86BCR.	**Check continuity. Replace if defective.**
3. Loose or broken wire #9 from generator relay 86BCR to generator switch S12.	**Check continuity. Replace if defective.**
4. Defective generator switch S12.	**Check switch. Replace if defective.**
5. Loose or broken wire #85 from generator switch S12 to generator relay 86ACR.	**Check continuity. Replace if defective.**
6. Loose or broken wire #85 from generator relay 86ACR to generator relay 86BCR.	**Check continuity. Replace if defective.**
7. Loose or broken wire #86B from generator relay 86ACR to generator relay 86BCR.	**Check continuity. Replace if defective.**
8. Defective relay 86ACR.	**Check relay. Replace if defective.**
9. Defective relay 86BCR.	**Check relay. Replace if defective.**
10. Open diode D86C-1.	**Check diode. Replace if defective.**
11. Loose or broken wire #17 from diodes D86B-1 to relay 17CR.	**Check continuity. Replace if defective.**
12. Loose or broken wire #2A from relays 10ACR2 and 86BCR to relay 10ACR1.	**Check continuity. Replace if defective.**
13. Loose or broken wire #85A from circuit breaker CB4 to relay 86BCR.	**Check continuity. Replace if defective.**
14. Tripped or defective circuit breaker CB4.	**Reset circuit breaker. Replace if defective.**
15. Loose or broken wire #3 from circuit breaker CB4 to circuit breaker CB1.	**Check continuity. Replace if defective.**
16. Loose or broken wire #86C from relay 86BCR to generator valve coil 2H-86C.	**Check continuity. Replace if defective.**
17. Loose or broken wire #02 from base terminal block to generator valve coil 2H-86C.	**Check continuity. Replace if defective.**
18. Defective generator valve coil 2H-86C.	**Check coil. Replace if defective.**

4.2-32 Hydraulic Generator Does Not Shut Off from Generator Switch

1. Defective generator switch S12.	**Check switch. Replace if defective.**
2. Loose or broken wire #86 from generator switch S12 to diode D86.	**Check continuity. Replace if defective.**
3. Open diode D86.	**Check diode. Replace if defective.**
4. Defective relay 86ACR.	**Check relay. Replace if defective.**

5. Loose or broken wire #02 from base terminal block to relay 86ACR.	**Check continuity. Replace if defective.**

4.2-33 All Outriggers Inoperative (Auto-level and manual)

⚠ WARNING

Scissors lift must be below high speed limit switch for outriggers to function.

NOTE

For the outriggers to function the upper control console must be in the lift position.

1. No power on wire #44 at relay 35CR.	**If no power is present ensure there is power on wire #35 and relay 35CR operates correctly.**
2. Loose or broken wire #44 from relay 35CR to pin #6 on connector CN14 on outrigger board.	**Check for continuity. Replace if defective.**
3. No power at wire #9 at pin #5 on connector CN14 on outrigger board.	**If no power is present check for continuity on wire #9 back to base terminal block TB-1. Replace if defective.**
4. Defective relay 9CR2 or 9CR3 on outrigger board.	**Check relays. Replace if defective.**
5. Defective relay 17DCR on outrigger board.	**Check relay. Replace if defective.**
6. Open or broken jumper J17E on outrigger board.	**Check jumper. Replace if defective.**
7. Open diode D17B-1 on outrigger board.	**Check diode. Replace if defective.**
8. Loose or broken wire #17 from pin #2 on connector CN14 on outrigger board to relay 35CR or relay 17CR.	**Check for continuity. Replace if defective.**
9. Loose or broken wire #17B from pin #1 or wire #02 from pin #2 on connector CN21 on outrigger board to outrigger holding valve coil 2H-17B.	**Check for continuity. Replace if defective.**
10. Defective outrigger holding valve coil 2H-17B.	**Check coil. Replace if defective.**

4.2-34 All Outriggers Inoperative (Auto-level and manual from platform controls)

1. Loose or broken wire #35C from pin #1 on connector CN20 on outrigger board through outrigger cables and plugs to the outrigger enable switch S9A in the control console.	**Check for continuity. Replace if defective.**
2. Loose or broken wire #35D from outrigger enable switch S9A to pin #5 on the outrigger control console plug.	**Check for continuity. Replace if defective.**
3. Defective outrigger enable switch S9A.	**Check switch. Replace if defective.**

4.2-35 All Outriggers Inoperative (Base controls)

1. Defective outrigger enable switch S9B.	**Check switch. Replace if defective.**

4.2-36 All Outriggers Inoperative (Auto-level)

A: Led Power Indicator Light at Outrigger Control Module (OCM1) Not on Constant

1. Loose or broken wire #10A from pin #1 of the tilt switch connector to pin P2-12 on the outrigger control module OCM1.	**Check for continuity. Replace if defective.**
2. Loose or broken wire #10A from pin #1 of the tilt switch connector to main terminal block TB-1.	**Check for continuity. Replace if defective.**
3. Loose or broken wire #02 from pin #3 of the tilt switch connector to pin P2-11 on the outrigger control module OCM1.	**Check for continuity. Replace if defective.**
4. Loose or broken wire #02 from pin #3 of the tilt switch connector to main terminal block TB-1.	**Check for continuity. Replace if defective.**
5. Defective outrigger control module OCM1.	**Replace.**

4.2-37 All Outriggers Inoperative (Auto Level Only)
B: Led Power Indicator Light at Outrigger Control Module (OCM1) Flashing

Flash Code	Probable Cause	Remedy
1/1	1. Outriggers are all up and machine is tilted.	1. Level the machine.
1/2	1. Machine is elevated. 2. Loose or broken wire # 35.	1. Lower the scissor stack below high speed limit switch. 2. Check for input voltage on wire #35 at pin P2-10 of the outrigger control module (OCM1). Replace if defective.
2/2	1. At least one outrigger is not fully retracted. 2. Defective outrigger rod limit switch (LS61, LS62, LS63, LS64) or wiring. 3. Defective diode (D36) on outrigger board.	1. Fully retract all outriggers. 2. Replace defective or damaged switch(es) or wiring. 3. Check for continuity. Replace if defective.
2/1	1. Outriggers are all down and the machine is not fully level.	1. Move machine to less sloped terrain if it will not lift.
5/5	1. Power on wire #70 or #79 at power on. 2. Power on wire #70 or #79 when manually operating outriggers.	1. Check for power on wire #70 or #79 at pin P2-5 or P2-6 of the outrigger control module. Replace defective component. 2. Check for power on wire #70 or #79 while manually operating an outrigger.
5/2	1. Low or no voltage on wire #35c. 2. Loose or broken wire on #35c.	1. Check battery and charging system to ensure minimum 9 volts. 2. Check for input voltage on wire #35c at pin P4-9 of outrigger control module (OCM1).
7/1	1. Excessive vibration. 2. Defective outrigger control module.	1. Outrigger control module cannot read tilt sensor. 2. Replace.
6/6	1. Outriggers are being manually controlled.	1. Indicates function activated. No repair necessary.
7/8	1. Error occured while self diagnosing the hardware fail safe.	1. Turn off power to reset the outrigger control module. Turn power back on and see if the code has cleared. If problem persists, replace outrigger control module.
5/1	1. Low input voltage to outrigger control module.	1. Check for minimum 9 volts between wire #02 at pin P2-11 and wire #10A at pin P2-12 at outrigger control module.
7/7	1. Startup error occurred while self diagnosing.	1. Turn off power to reset the outrigger control module. Turn power back on and see if the code has cleared. If problem persists, replace outrigger control module.
7/5	1. Internal failure of OCM1.	1. Turn off power to reset the outrigger control module. Turn power back on and see if the code has cleared. If problem persists, replace outrigger control module.
7/2	1. Internal failure of OCM1.	1. Turn off power to reset the outrigger control module. Turn power back on and see if the code has cleared. If problem persists, replace outrigger control module.
8/1	1. Internal failure of OCM1.	1. Turn off power to reset the outrigger control module. Turn power back on and see if the code has cleared. If problem persists, replace outrigger control module.
8/2	1. Internal failure of OCM1.	1. Turn off power to reset the outrigger control module. Turn power back on and see if the code has cleared. If problem persists, replace outrigger control module.
8/3	1. Internal failure of OCM1.	1. Turn off power to reset the outrigger control module. Turn power back on and see if the code has cleared. If problem persists, replace outrigger control module.
8/4	1. Internal failure of OCM1.	1. Turn off power to reset the outrigger control module. Turn power back on and see if the code has cleared. If problem persists, replace outrigger control module.
8/5	1. Internal failure of OCM1.	1. Turn off power to reset the outrigger control module. Turn power back on and see if the code has cleared. If problem persists, replace outrigger control module.
7/6	1. Internal failure of OCM1.	1. Turn off power to reset the outrigger control module. Turn power back on and see if the code has cleared. If problem persists, replace outrigger control module.

60416AB

4.2-38 Left Front Outrigger Inoperative Manually

1. Defective left front outrigger switch S20 at platform, or S20A at base.	**Check switch. Replace if defective.**
2. Loose or broken wire #71 from outrigger control console to pin #6 on connector CN20 at outrigger board (retract), or from wire #75 to pin #7 (extend).	**Check continuity. Replace if defective.**
3. Open diode D71 (retract) or D75 (extend) on outrigger board.	**Check diode. Replace if defective.**
4. Loose or broken wire #71 from pin #7 on connector CN21 at outrigger board to valve coil 4H-71 (retract) , or wire #75 from pin #8 to 4H-75 (extend).	**Check continuity. Replace if defective.**
5. Loose or broken wire #02 from valve coil 4H-71 (retract) or 4H-75 (extend) to pin #2 on connector CN21 at the outrigger board.	**Check continuity. Replace if defective.**

4.2-39 Right Front Outrigger Inoperative Manually

1. Defective right front outrigger switch S21 at platform, or S21A at base.	**Check switch. Replace if defective.**
2. Loose or broken wire #72 from outrigger control console to pin #8 on connector CN20 at outrigger board (retract), or from wire #76 to pin #9 (extend).	**Check continuity. Replace if defective.**
3. Open diode D72 (retract) or D76 (extend) on outrigger board.	**Check diode. Replace if defective.**
4. Loose or broken wire #72 from pin #9 on connector CN21 at outrigger board to valve coil 4H-72 (retract), or wire #76 from pin #10 to 4H-76 (extend).	**Check continuity. Replace if defective.**
5. Loose or broken wire #02 from valve coil 4H-72 (retract) or 4H-76 (extend) to pin #2 on connector CN21 at the outrigger board.	**Check continuity. Replace if defective.**

4.2-40 Right Rear Outriggers Inoperative Manually

1. Defective right rear outrigger switch S22 at platform, or S22A at base.	**Check switch. Replace if defective.**
2. Loose or broken wire #73 from outrigger control console to pin #3 on connector CN20 at outrigger board (retract), or from wire #77 to pin #4 (extend).	**Check continuity. Replace if defective.**

3. Open diode D73 (retract) or D77 (extend) on outrigger board.	**Check diode. Replace if defective.**
4. Loose or broken wire #73 from pin #4 on connector CN21 at outrigger board to valve coil 4H-73 (retract), or wire #77 from pin #4 to 4H-77 (extend).	**Check continuity. Replace if defective.**
5. Loose or broken wire #02 from valve coil 4H-73 (retract) or 4H-77 (extend) to pin #2 on connector CN21 at the outrigger board.	**Check continuity. Replace if defective.**

4.2-41 Left Rear Outriggers Inoperative Manually

1. Defective left rear outrigger switch S23 at platform, or S23A at base.	**Check switch. Replace if defective.**
2. Loose or broken wire #74 from outrigger control console to pin #5 on connector CN20 at outrigger board (retract), or from wire #78 to pin #2 (extend).	**Check continuity. Replace if defective.**
3. Open diode D74 (retract) or D78 (extend) on outrigger board.	**Check diode. Replace if defective.**
4. Loose or broken wire #74 from pin #6 on connector CN21 at outrigger board to valve coil 4H-74 (retract), or wire #78 from pin #3 to 4H-78 (extend).	**Check continuity. Replace if defective.**
5. Loose or broken wire #02 from valve coil 4H-74 (retract) or 4H-78 (extend) to pin #2 on connector CN21 at the outrigger board.	**Check continuity. Replace if defective.**

4.2-42 Individual Outrigger Functions Inoperative (auto-level)

1. Loose or broken wire #71- #75 (depending on function not working) at pins 1-8 of outrigger control module plug P4.	**Check connections of outrigger functions not working (refer to Section 5 for pin reference chart). Replace if defective.**
2. No output from outrigger control module OCM1 at pins 1-8 of outrigger control module plug P4.	**Turn off power to reset the outrigger control module. Turn power back on and retest. If problem persists, replace outrigger control module.**

4.2-43 Auto-level Inoperative

1. Loose or broken wire #35D from outrigger enable switch S9A to auto mode outrigger switch S24.	**Check continuity. Replace if defective.**
2. Defective auto mode outrigger switch S24.	**Check switch. Replace if defective.**

3. Loose or broken wire #10A at pin #P2-12 on outrigger control module OCM1.	**Check for power at P2-12. If no voltage present, check continuity of wire. Replace if defective.**
4. Loose or broken wire #35 at pin #P2-10 on outrigger control module OCM1.	**Check for power at P2-10. If no voltage present, check continuity of wire. Replace if defective.**
5. Loose or broken wire #02 at pin #P2-11 on outrigger control module OCM1.	**Check for ground at P2-11. If no ground present, check continuity of wire. Replace if defective.**
6. Loose or broken wire #70 from auto mode outrigger switch S24 to pin #P2-5 on outrigger control module OCM1.	**Check continuity. Replace if defective.**

4.2-44 Auto All Up Inoperative (Retract)

1. Loose or broken wire #35D from outrigger enable switch S9A to auto mode outrigger switch S24.	**Check continuity. Replace if defective.**
2. Defective auto mode outrigger switch S24.	**Check switch. Replace if defective.**
3. Loose or broken wire #10A at pin #P2-12 on outrigger control module OCM1.	**Check for power at P2-12. If no voltage present, check continuity of wire. Replace if defective.**
4. Loose or broken wire #35 at pin #P2-12 on outrigger control module OCM1.	**Check for power at P2-10. If no voltage present, check continuity of wire. Replace if defective.**
5. Loose or broken wire #02 at pin #P2-11 on outrigger control module OCM1.	**Check for ground at P2-11. If no ground present, check continuity of wire. Replace if defective.**
6. Loose or broken wire #70 from auto mode outrigger switch S24 to pin #P2-5 on outrigger control module OCM1.	**Check continuity. Replace if defective.**

4.3 Hydraulic System

4.3-1 All Functions Inoperative

1. Hydraulic oil level low.	**Refill tank to proper level.**
2. Defective pump P1.	**Check pump. Repair or replace if defective.**
3. Broken engine to pump coupler.	**Check coupler. Replace if defective.**
4. Open relief valve R1.	**Check valve. Replace if defective.**

4.3-2 Steering Inoperative

1. Stuck or defective brake feed valve 2H-30A-2.	**Check valve. Repair or replace if defective.**
2. Stuck or defective steer right valve 4H-23A or steer left valve 4H-24A.	**Check valves. Replace if defective.**
3. Steer cylinder C7 damaged or bypassing internally.	**Check cylinder. Repair or replace if defective.**

4.3-3 Steer and First Drive Speed Inoperative

1. Small pump dump valve 2H-18A stuck open.	**Check valve. Repair or replace if defective.**
2. Worn or defective small pump section of pump P1.	**Check pump. Repair or replace if defective.**
3. Check valve CV1 or CV2 stuck.	**Check valves. Clean or replace if defective**

4.3-4 Lift and Second Drive Speed Inoperative

1. Large pump dump valve 2H-17A stuck open.	**Check valve. Repair or replace if defective.**
2. Worn or defective large pump section of pump P1.	**Check pump. Repair or replace if defective.**
3. Check valve CV1 or CV2 stuck.	**Check valves. Clean or replace if defective.**

4.3-5 Drive Inoperative

1. Stuck or defective drive reverse valve 4H-15B or drive forward valve 4H-16B.	**Check valves. Repair or replace if defective.**
2. Defective motion control valve MC1.	**Check valve. Repair or replace if defective.**
3. Missing or defective check balls in series/parallel valve manifold 3H-20A.	**Repair or replace balls. Refer to Section 5 for proper location.**
4. Stuck or defective main series/parallel valve spool V3 in drive motor.	**Check valve. Repair or replace if defective.**

5. Defective drive motor M1.	**Check motor. Repair or replace if defective.**
6. Free wheeling valve 2H-30A stuck.	**Check valve. Repair or replace if defective.**
7. Cushion cylinder C8 bypassing internally.	**Check cylinder. Repair or replace if defective.**

4.3-6 Reverse Drive Inoperative

1. Stuck or defective drive valve 4H-15B.	**Check valve. Repair or replace if defective.**
2. Stuck or defective check valve in motion control assembly MC1.	**Check valves. Clean or replace if defective**

4.3-7 Forward Drive Inoperative

1. Stuck or defective drive valve 4H-16B.	**Check valve. Repair or replace if defective.**
2. Stuck or defective check valve in motion control assembly MC1.	**Check valves. Clean or replace if defective.**

4.3-8 Brakes Do Not Release

1. Stuck or defective brake feed valve 2H-30A-2.	**Check valve. Repair or replace if defective.**
2. Stuck or defective brake dump valve 2H-25.	**Check valve. Repair or replace if defective.**
3. Stuck or defective auto reset valve V6.	**Check valve. Repair or replace if defective.**
4. Defective disc brake caliper BC1.	**Check caliper. Repair or replace if defective.**
5. Plugged caliper orifice O3.	**Clean or replace caliper.**

4.3-9 Up Circuit Inoperative

1. Stuck or defective lift valve 2H-14B.	**Check valve. Repair or replace if defective.**
2. Stuck check valve CV3.	**Check valve. Replace if defective.**
3. Misadjusted or defective lift relief valve R2.	**Adjust valve. Replace if defective.**
4. Stuck or defective lowering valve 2H-13A.	**Check valve. Repair or replace if defective.**
5. Stuck or defective manual lowering valve V1.	**Check valve. Repair or replace if defective.**
6. Open or defective brake feed valve 2H-30A-2.	**Check valve. Repair or replace if defective.**
7. Open manual override on holding valve 2H-13A-1 or 2H-13A-2.	**Depress and turn manual override clockwise to close. Replace if defective.**
8. Stuck holding valve 2H13A-1 or 2H13A-2.	**Check valves. Repair or replace if defective.**

4.3-10 Down Circuit Inoperative

1. Stuck or defective lowering valve 2H-13A.	**Check valve. Repair or replace if defective.**
2. Stuck holding valve 2H13A-1 or 2H13A-2.	**Check valves. Repair or replace if defective.**
3. Plugged lowering orifice O1.	**Clean or replace orifice.**

4.3-11 Powered Extension Platform Inoperative

1. Defective powered extension pump P3.	**Check pump. Repair or replace if defective.**
2. Misadjusted or defective relief valve R5.	**Adjust valve. Replace if defective.**
3. Stuck or defective deck extend valve 4H-26 or 4H-26A or retract valve 4H-27 or 4H-27A.	**Check valves. Repair or replace if defective.**
4. Defective powered extension cylinder C13 front or C14 rear.	**Check cylinder. Repair or replace if defective.**

4.3-12 Hydraulic Generator Inoperative

1. Stuck or defective hydraulic generator valve 2H-86C.	**Check valve. Repair or replace if defective.**
2. Misadjusted or defective flow control valve FC1.	**Adjust valve. Replace if defective.**
3. Stuck or defective large pump dump valve 2H-17A.	**Check valve. Repair or replace if defective.**
4. Defective hydraulic generator hydraulic motor GM1.	**Check motor. Repair or replace if defective.**

4.3-13 All Outriggers Inoperative

1. Stuck or defective outrigger holding valve 2H-17B.	**Check valve. Repair or replace if defective.**

4.3-14 Left Front Outrigger Inoperative

1. Stuck or defective retract valve 4H-71 or extend valve 4H-75.	**Clean valve. Replace if defective.**
2. Stuck or defective check valve CV5.	**Check valve. Replace if defective.**
3. Bypassing outrigger cylinder C9.	**Repack cylinder. Replace if defective.**

4.3-15 Right Front Outrigger Inoperative

1. Stuck or defective retract valve 4H-72 or extend valve 4H-76.	**Clean valve. Replace if defective.**
2. Stuck or defective Check valve CV6.	**Check valve. Replace if defective.**
3. Bypassing outrigger cylinder C10.	**Repack cylinder. Replace if defective**

4.3-16 Right Rear Outrigger Inoperative

1. Stuck or defective retract valve 4H-73 or extend valve 4H-77.	**Clean valve. Replace if defective.**
2. Stuck or defective check valve CV7.	**Check valve. Replace if defective.**
3. Bypassing outrigger cylinder C11.	**Repack cylinder. Replace if defective**

4.3-17 Left Rear Outrigger Inoperative

1. Stuck or defective retract valve 4H-74 or extend valve 4H-78.	**Clean valve. Replace if defective.**
2. Stuck or defective check valve CV4.	**Check valve. Replace if defective.**
3. Bypassing outrigger cylinder C12.	**Repack cylinder. Replace if defective**

4.3-18 Outriggers Drift In

1. Defective check valve left front CV4, right front CV5, right rear CV6 or left rear CV7.	**Clean valve. Replace if defective.**
2. Outriggers cylinder bypassing left front C9, right front C10, right rear C11 or left rear C12.	**Repack cylinder. Replace if defective**

Notes

Section 5 – Procedures

5.1 General

The following information is provided to assist you in the use and application of servicing and maintenance procedures contained in this chapter.

NOTE

The illustrations in this manual are for instructional purposes only. The models and components shown may appear somewhat different from those on your actual MEWP.

5.1-1 Safety and workmanship

Your safety, and that of others, is the first consideration when engaging in the maintenance of equipment. Always be conscious of weight. Never attempt to move heavy parts without the aid of a mechanical device. Do not allow heavy objects to rest in an unstable position. When raising a portion of the equipment, ensure that adequate support is provided.

Unless specifically noted otherwise, before beginning any procedure:

1. Park the MEWP on a firm, level surface. Fully lower the machine.
2. Push in the emergency stop buttons on the platform control console and the base control console.
3. Turn the off/platform/base key switch to the off position. Remove the key.
4. Turn the main power disconnect switch to the off position.

After you complete a procedure which involves the modification, adjustment, or replacement of a hydraulic or electrical component, do all of the function tests given in your unit's Operation Manual.

⚠ WARNING

Fall hazard. Use the three points of contact principle when you use the MEWP to enter or exit the platform. If you do not obey, there is a risk of death or serious injury.

⚠ WARNING

Do not operate the platform controls without the correct fall protection attached to the designated location in the platform. Failure to do so could result in death or serious injury!

⚠ WARNING

Make sure there are no people or obstructions in the test area, and there is sufficient space for the scissor and drive functions required for the given procedures.

5.2 Platform

5.2-1 Adjust the gate spring hinge

1. The tension of the spring hinges should be such that when the gate is opened halfway and released, it close fully and latches.

2. To adjust the tension of the spring hinges, first remove the safety locking screw located at the top or bottom of each hinge. Retain the screws for reinstallation later.

3. To increase the tension, insert a 5/32 in hex wrench in the screw socket, and turn the wrench clockwise. To release the tension, depress the hex wrench in the socket, let it rotate counterclockwise, then release the hex wrench.

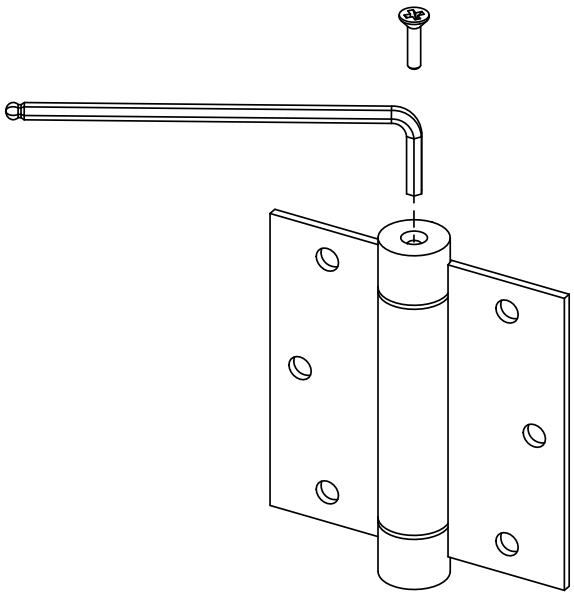

4. Adjust the tension on both hinges until the gate releases and latches from a half open position.

5. Reinstall the safety locking screws into the hinges when tension adjustment is complete.

5.3 Scissors

5.3-1 Replace and adjust the end of stroke limit switch (LS4)

Machine preparation

1. Ensure the MEWP is parked on a firm level surface.

2. Chock or block the wheels to keep the MEWP from rolling forward or backward.

Remove the limit switch

1. Raise the platform until the scissor slider tracks are accessible. Deploy the maintenance stand.

2. Locate the end of stroke limit switch assembly in the front left scissor slider track. Loosen the 1/4 in flat screws holding the assembly in place, and slide the assembly out of the track.

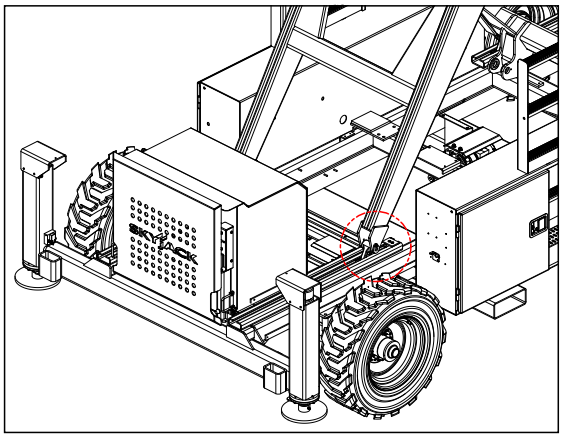

3. Remove the 1/4 in flat screws from the limit switch locking plate, then remove the #8 screws and washers mounting the limit switch to the limit switch mounting plate. Retain the hardware and plates for reassembly later.

4. Cut the tie wraps securing the limit switch cable until the cable is free.

5. Disconnect the limit switch cable wires from the electrical panel in two places. Discard the old limit switch.

Replace the limit switch

1. Mount the new limit switch (115658) to the underside of the mounting plate using the #8 lock washers and screws removed in Step 3. The locking plate and 1/4 in flat screws are reinstalled later.

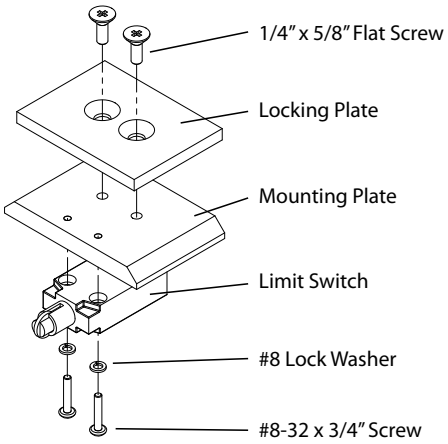

Limit switch electrical connection

1. Route the new limit switch cable along the same path as the old one into the cabinet, using tie wraps as needed to secure it at regular intervals.

2 Strip the cable jacket back to separate the wires. Cut the black wire to length if needed, strip the end, and crimp a ferrule onto it. Insert it into the 45 degree header on the PC board (refer to 3.25 Electrical Panel Diagram (ANSI/CSA)).

3. Cut the black and white wire to length if needed. Strip the end and fasten it to the upper screw on socket 14CR on the electrical panel (refer to 3.25 Electrical Panel Diagram (ANSI/CSA)).

4. Stow the maintenance stand and fully lower the platform.

Adjust the limit switch

1. Attach the end of a measuring tape to the side of the platform with a tie wrap, in such a way that the measuring tape hangs down freely to the ground.

NOTE

The end of the measuring tape should be level with the standing surface of the platform.

2. Raise the platform until the distance from the standing surface of the platform to the ground measures 50 ft (15.24 m).

3. Using a piece of masking tape, mark the location of the end of the bottom slider assembly in the front left scissor slider track.

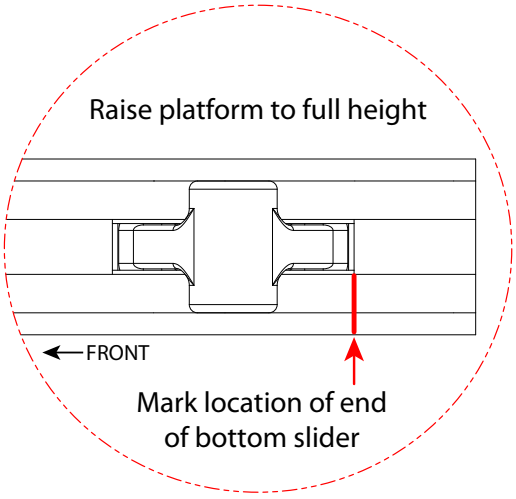

4. Lower the platform slightly until the end of the bottom slider assembly moves 1/2 in (1.25 cm) from the mark.

5. Slide the new limit switch assembly into the slider track. Align the locking plate on the slider track, and loosely secure it to the mounting plate with the 1/4 in flat screws (apply Loctite to the screws before installing). Slide the assembly in until the limit switch plunger touches the slider. Tighten the 1/4 in flat screws.

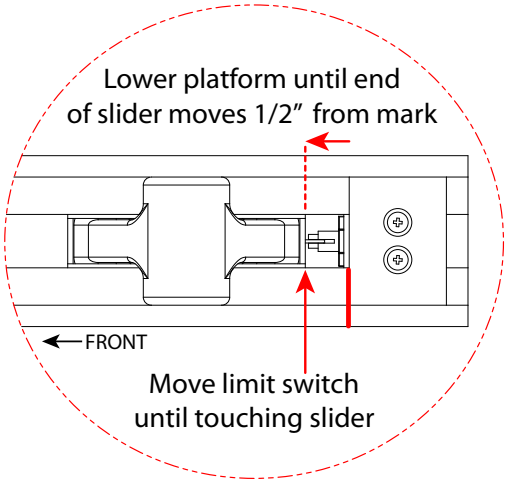

5. Fully lower the platform.

Test the limit switch

1. Raise the platform. The platform should stop at full height when the scissor slider assembly depresses the limit switch plunger.

2. Lower the platform and remove the measuring tape from the platform. Remove the masking tape from the slider track.

3. Remove the chocks or blocks from the wheels.

5.3-2 Replace and adjust the high speed cutout limit switch (LS5)

Machine preparation

1. Ensure the MEWP is parked on a firm level surface.

2. Chock or block the wheels to keep the MEWP from rolling forward or backward.

Remove the limit switch

1. Raise the platform to give access to the limit switch cable, and deploy the maintenance stand.

2. Turn the main power disconnect switch to the OFF position.

3. Remove the bolts, washers, and nuts (x2) securing the limit switch cover. Set aside the hardware and cover for reinstallation later.

4. Remove the bolts and washers (x2) securing the limit switch to the bracket. Set aside for reinstallation later.

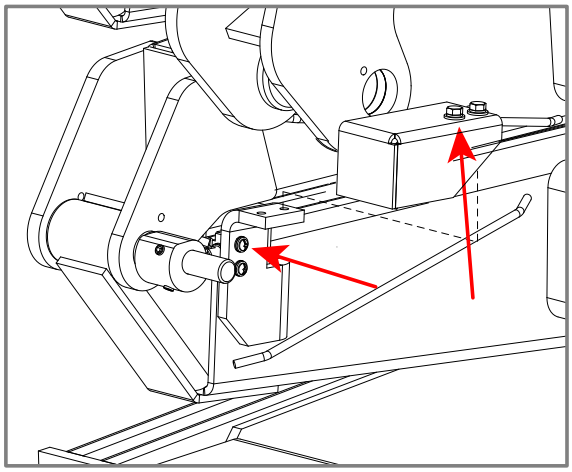

5. Remove the limit switch and free the limit switch cable by cutting the tie wraps.

6. Follow the cable into the electrical panel, and disconnect the limit switch wires from the electrical panel. Discard the limit switch(es).

Replace the limit switch

1. Mount the new limit switch (119296) on the bracket, using the hardware removed previously (apply a small amount of Loctite to the bolts).

Limit switch electrical connections

1. Route the new limit switch cable along the same path as the old one into the electrical panel cabinet. Use tie wraps as needed to secure them at regular intervals.

2 Strip the cable jacket back to separate the wires. Cut the wires to length if needed, strip the ends, and insert them into the terminal block (refer to 3.25 Electrical Panel Diagram (ANSI/CSA)).

3. Stow the maintenance stand and fully lower the platform.

Set up the limit switch cam

1. Turn main power disconnect switch to the ON position, and start the engine.

2. Attach the end of a measuring tape to the side of the platform with a tie wrap, in such a way that the measuring tape hangs down freely to the ground.

NOTE

The end of the measuring tape should be level with the standing surface of the platform.

3. Raise the platform until the distance from the standing surface of the platform to the ground measures 10 ft (3.05 m).

4. Loosen the set screws (x2) on the high speed cutout cam, and rotate the cam until it releases the limit switch plunger and a click is from the switch. Apply a small amount of Loctite to both set screws, and tighten them.

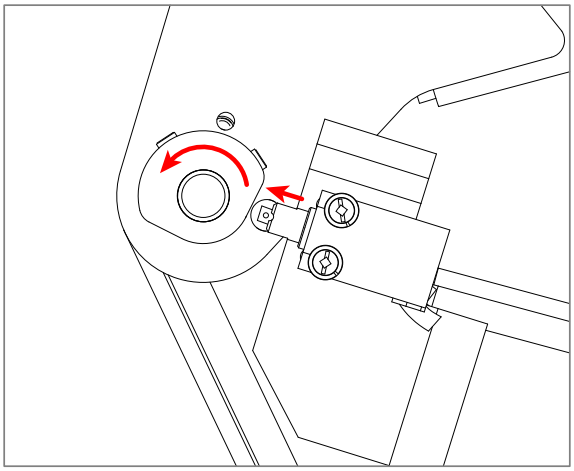

Test the limit switch

1. Raise the platform less than 10 ft (3.05 m), and drive the unit at full speed.

2. Raise the platform over 10 ft (3.05 m). The unit should automatically switch from high speed to low speed.

5.4 Engines

5.4-1 Kubota dual fuel (DF972) resistance checks

Pick-up sensor resistance

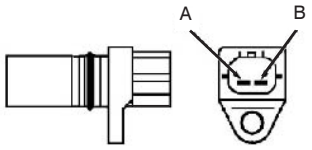

1. Disconnect connector from sensor.
2. Measure the resistance with an ohmmeter.
3. If resistance is not within factory specifications, replace it.

Resis-tance	Factory Specification	A - B	1.85 to 2.45 kΩ at 20 °C

Ignition coil resistance

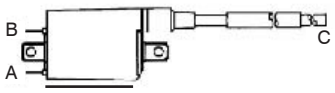

1. Disconnect connector from ignition coil.
2. Measure the resistance with an ohmmeter.
3. If resistance is not within factory specifications, replace it.

Resis-tance	Factory Specification	A - B	1.87 to 2.53 Ω at 20 °C
		A - C	10.4 to 15.6 Ω at 20 °C

A: Terminal (+) C: High Tension Cord
B: Terminal (-)

Ignitor resistance

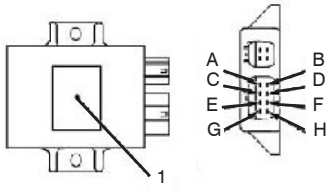

1. Disconnect connector from ignitor.
2. Measure the resistance with an ohmmeter.
3. If resistance is not within the factory specifications, replace it.

IMPORTANT

To replace the ignitor with a service part, make sure the ignitor has the same part cord No / ID mark as the old one. (See the information label #1.)

Ignitor Check Chart

Negative Positive	A	B	C	D	E	F	G	H
A		10 to 40 kΩ	10 to 40 kΩ	11 to 47 kΩ	infinity	infinity	infinity	infinity
B	10 to 40 kΩ		0.33 to 1.3 kΩ	1.8 to 7.3 kΩ	infinity	infinity	infinity	infinity
C	10 to 40 kΩ	0.33 to 1.3 kΩ		1.5 to 6.0 kΩ	infinity	infinity	infinity	infinity
D	11 to 47 kΩ	1.8 to 7.3 kΩ	1.5 to 6.0 kΩ		infinity	infinity	infinity	infinity
E	infinity	infinity	infinity	infinity		infinity	infinity	infinity
F	2 megohm (minimum)	2 megohm (minimum)	2 megohm (minimum)	2 megohm (minimum)	infinity		infinity	infinity
G	2 megohm (minimum)	2 megohm (minimum)	2 megohm (minimum)	2 megohm (minimum)	infinity	infinity		infinity
H	2 megohm (minimum)	2 megohm (minimum)	2 megohm (minimum)	2 megohm (minimum)	infinity	infinity	infinity	

60434AA

5.4-2 Kubota dual fuel (DF972) engine throttle setting

Preparation

1. Look for a piece of reflective tape on the pulley of the fan belt. If the reflective tape is missing, attach a small piece.
2. When measuring engine speed using a digital tachometer, aim the tachometer at this reflective strip while the engine is running.

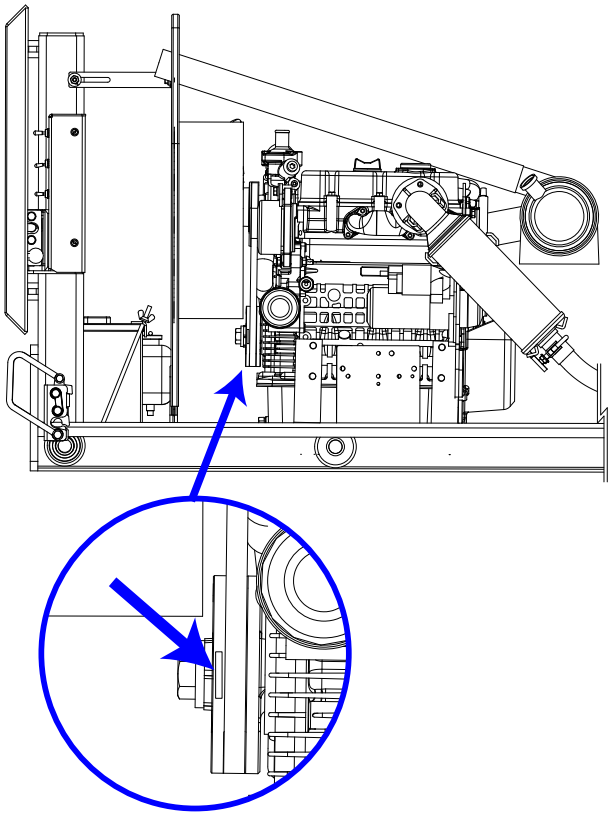

3. On the platform control box, set the low/high throttle switch to low. Start the engine and let it run until it reaches normal operating temperature.
4. Push the solenoid plunger in, and hold it there. Measure the rpm using a digital tachometer, as described in Step 2.

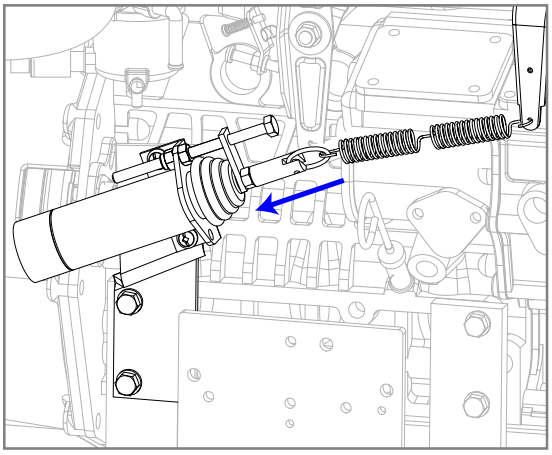

5. If the tachometer reads 3500 ±50 rpm, the high throttle rpm is already properly set. Skip to Step 8 to check the low throttle rpm. If the tachometer reading is outside of the range given above, proceed to the next step to adjust it.
6. Adjust the length of the stroke by first loosening the jam nut, then turning the threaded link and measuring the rpm until it reaches 3500 ±50 rpm.
7. Once the correct rpm is reached, apply a drop of Loctite 242 to the thread, and tighten the nut against the threaded link. Use vice grips to hold the link stationary, and a wrench to tighten the nut.

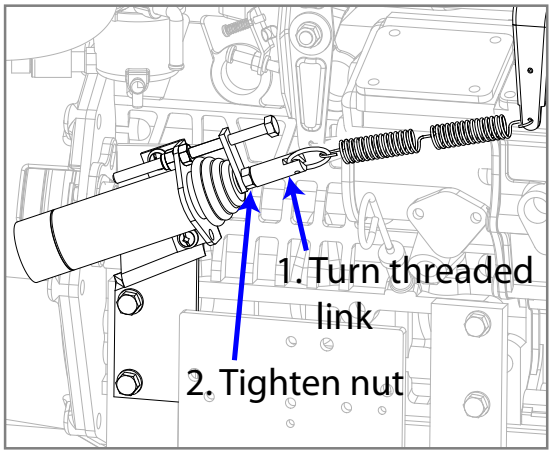

Check and set the low throttle

9. Measure the rpm using a digital tachometer, as described in Step 2.

10. If the tachometer reads 2050 ±50 rpm, the low throttle is already properly set. No further action is required. If the tachometer reading is outside of the correct range, proceed to the next step to adjust it.

11. Adjust the length of the long threaded bolt by turning the locknut and measuring the low throttle rpm until it reaches 2050 ±50 rpm.

12. Once the correct rpm is reached, apply a drop of Loctite© 242 to the thread of the long bolt. Tighten the jam nut.

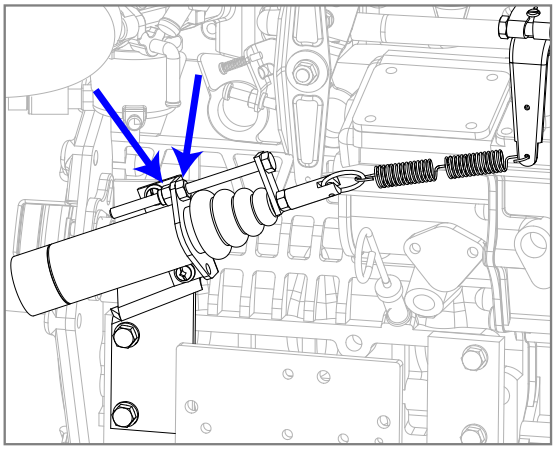

5.4-3 Kubota diesel (D1305) engine throttle setting

Preparation

1. Look for a piece of reflective tape on the fan belt pulley. If the reflective tape is missing, attach a small piece.

2. When measuring the rpm using a digital tachometer, aim the tachometer at this reflective strip while the engine is running.

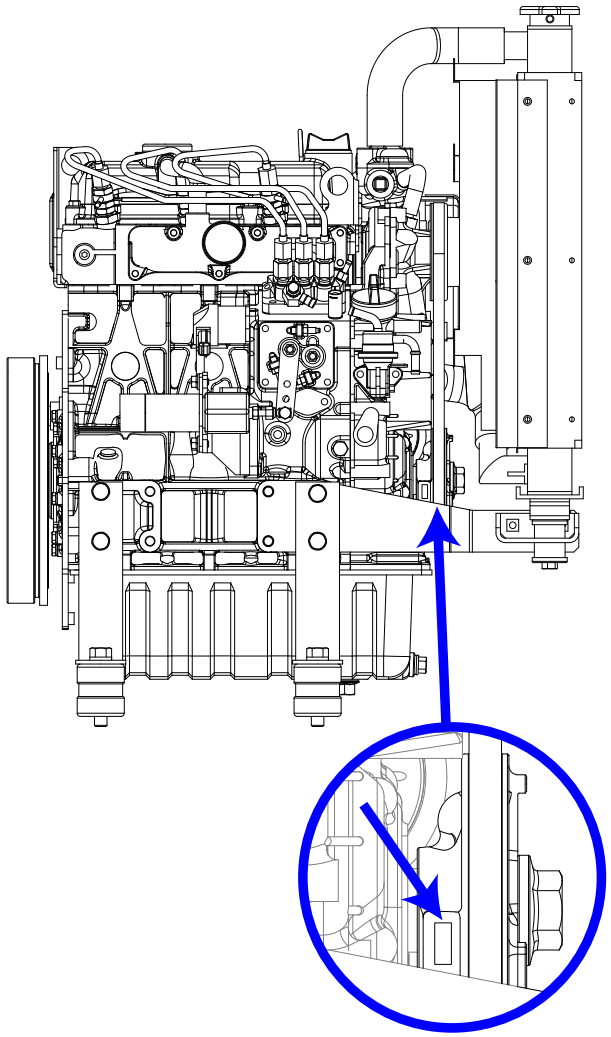

3. On the platform control box, set the low/high throttle switch to low. Start the engine and let it run until it reaches normal operating temperature, then switch it to high throttle for the next step.

Check and set the high throttle

4. Measure the rpm using a digital tachometer, as described in Step 2.

5. If the tachometer reads 2800 ±50 rpm, the high throttle is already properly set. No further action is required. If the tachometer reading is outside of the correct range, proceed to the next step to adjust it.

6. Adjust the high throttle by first loosening the solenoid jam nut, then turning the solenoid threaded rod and measuring the rpm until it reaches 2800 ±50 rpm.

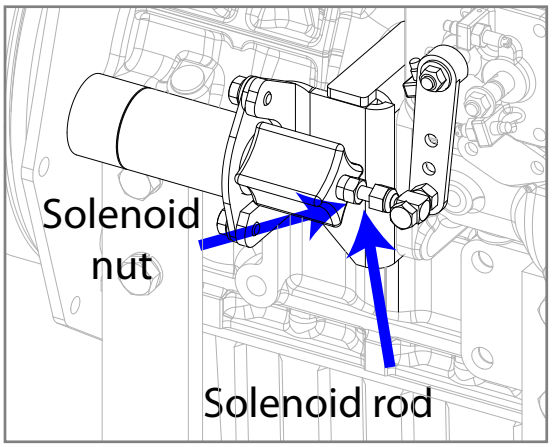

7. Once the correct rpm is reached, apply a drop of Loctite 242 to the thread, and tighten the jam nut.

Check and set the low throttle

8. On the platform control box, set the low/high throttle switch to low.

9. With the engine in low throttle, measure the rpm using a digital tachometer, as described in Step 2.

10. If the tachometer reads 1400 ±50 rpm, the low throttle rpm is already properly set. No further action is required. If the tachometer reading is outside of the range given above, proceed to the next step to adjust it.

11. Adjust the low idle by first loosening the low idle stop jam nut, then turning the low idle stop screw and measuring the rpm until it reaches 1400 ±50 rpm.

12. Once the correct rpm is reached, apply a drop Loctite 242 to the thread, and tighten the jam nut.

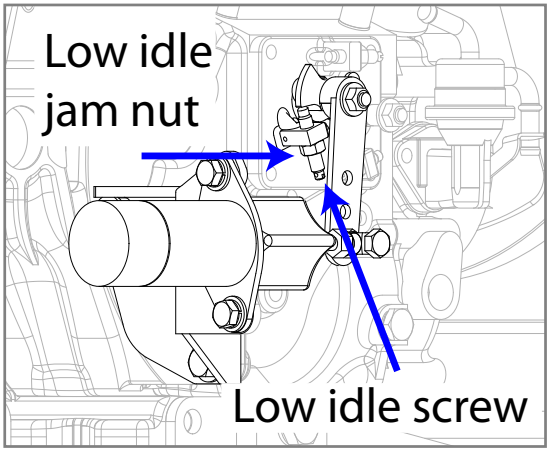

5.4-4 Replace the fuel filter element (Kubota D1305)

Kubota recommends replacing the fuel filter every 400 hours.

1. Open the engine door and locate the fuel filter.
2. Close the fuel filter lever (turn counterclockwise).
3. Unscrew the retaining ring and remove the filter cup.
4. Remove the old fuel filter element.
5. Rinse the inside of the cup with diesel fuel or kerosene.
6. Install a new fuel filter element, and reassemble the fuel filter cup and retaining ring, ensuring all components are free of dirt and dust.
7. Bleed the fuel system of air (refer to 5.2-5).

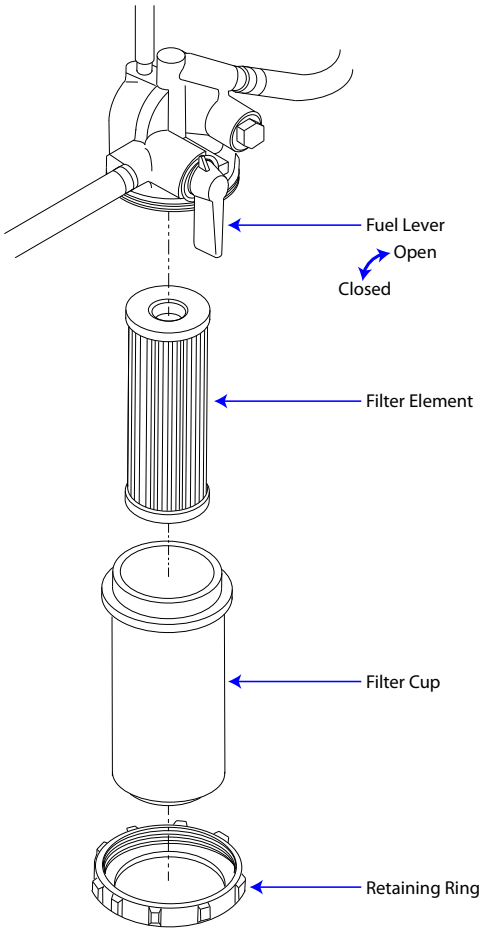

8. Close the engine door.

5.4-5 Bleed the fuel system of air (Kubota D1305)

Bleeding the fuel system of air is required after changing fuel hoses or filters, or after the fuel tank has become empty.

1. Allow the engine to cool, if it has been running.
2. Fill up the fuel tank with fuel.
3. Open the fuel filter lever (vertical position).

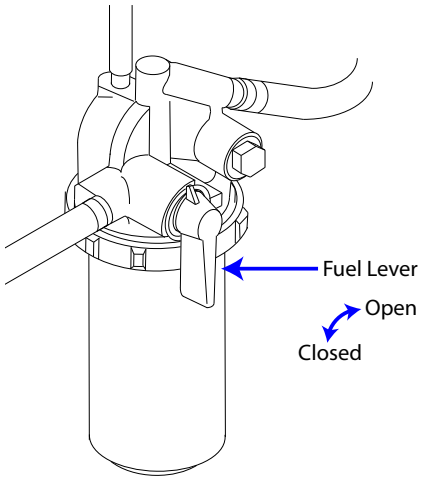

4. Open the air vent plug on the top of the fuel injection pump a few turns. Some air bubbles should come out.

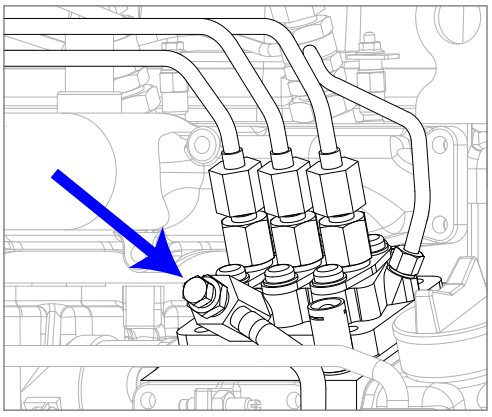

5. When no more air bubbles are seen, close the air vent plug.

5.4-6 Replace and adjust the fan belt

Kubota recommends inspecting the fan belt every 100 hours, and replacing it every 500 hours.

Inspect the fan belt for wear

1. Inspect the fan belt for any signs of damage, such as cracks or tears. Inspect the fan belt for signs of wear, which may include the belt sinking into the pulley groove.

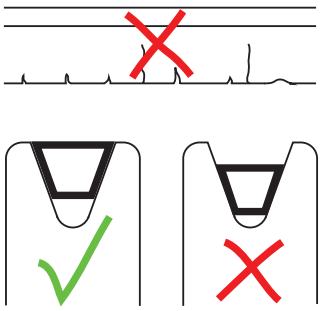

2. If damage or wear is found, replace the fan belt as described in the next section.

Replace the fan belt

1. Remove the alternator pulley cover, and loosen the alternator adjustment bolt.
2. Remove the old fan belt, and install a new one.
3. Replace the alternator pulley cover, and tighten the adjustment bolt.
4. Measure and adjust the fan belt deflection as described in the next section.

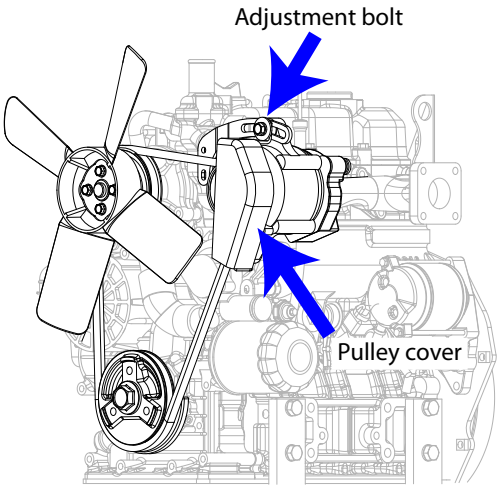

Test and adjust the deflection

1. Measure the fan belt deflection by depressing the belt halfway between the fan drive pulley and the alternator pulley, at about 22 lbf•ft (98 N•m) of force.

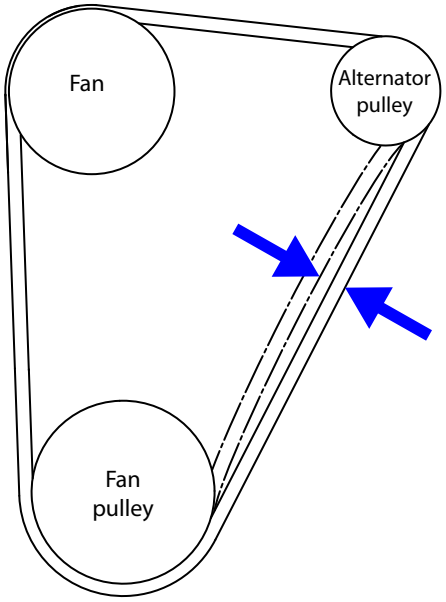

2. If the deflection is greater than 1/4–3/8 in (7–9 mm), adjust the position of the alternator. Loosen the alternator adjustment bolt and use a pry bar between the alternator and engine block. Tighten the bolt.

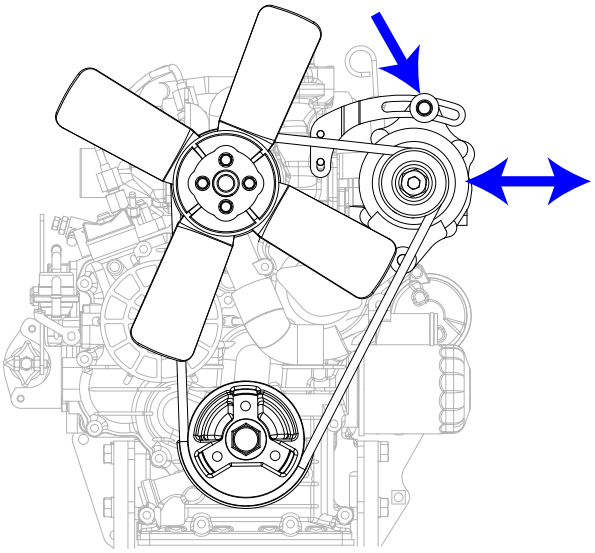

3. Retest the deflection, and continue to adjust as needed until it falls within the range specified above.

5.4-7 Replace the air cleaner element

Kubota recommends replacing the air cleaner element once a year. More frequent changes may be needed in dusty environments.

NOTE

The air cleaner uses a dry element only. Never add oil to the air cleaner assembly.

1. Unlatch and remove the air cleaner cap. Use a cloth to clean any dirt or dust from out of the cap.
2. Remove the old air cleaner element by pulling it straight out.

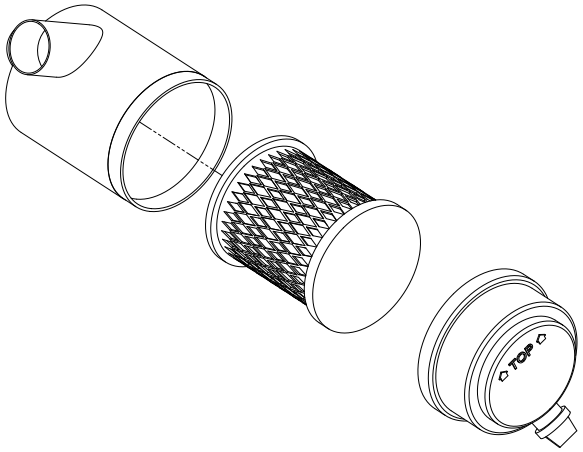

3. Install a new air cleaner element, pushing firmly to seat it.
4. Reinstall and latch the air cleaner cap, ensuring the *TOP* mark is facing up.

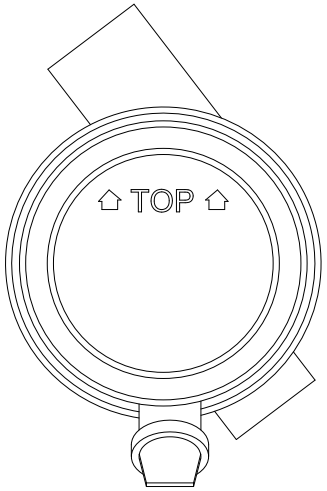

5.4-8 Replace the oil filter cartridge

Kubota recommends replacing the oil cartridge every 400 hours.

NOTE

Be sure to stop the engine before changing the oil filter cartridge.

1. Remove the old oil filter cartridge with a filter wrench.

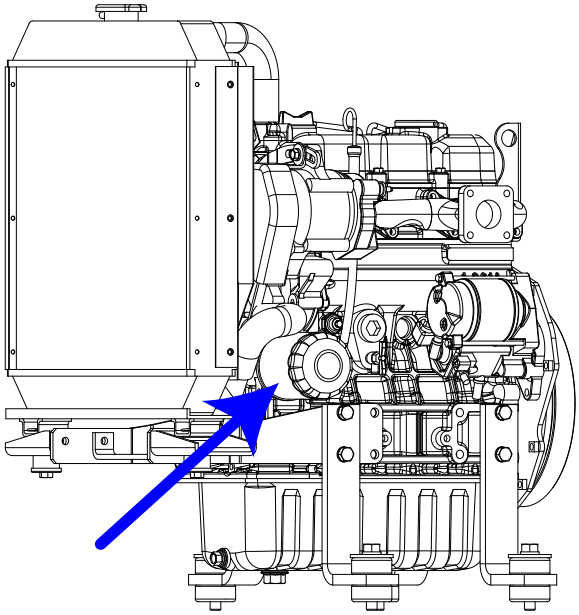

2. Prepare a new filter cartridge by applying a light coating of oil to the new cartridge gasket.
3. Install the new cartridge by screwing it in by hand.

NOTE

Do not over tighten the filter as it may cause deformation of the rubber gasket.

4. The engine oil level normally decreases a little after replacing the oil filter cartridge, so run the engine for 10 to 15 minutes, then shut it off and allow it to cool.
5. Check for oil leaks around the gasket, and if no leaks are found, check the oil level using the dipstick.
6. Replenish the oil if needed.

5.4-9 Change the oil

Kubota recommends changing the oil every 200 hours.

1. With the MEWP on a level surface, start the engine and warm it up for approximately 5 minutes. Shut off the engine.
2. Place a container underneath the engine's oil pan drain plug.
3. Remove the drain plug, and allow the oil to drain completely.
4. Screw the plug back into the oil pan, tightening it to 24 to 27 lbf•ft or 33 to 37 N•m.
5. Unscrew one of the oil filler caps and fill the engine with new oil, up to the upper line on the dipstick. Reinstall the cap.

Above 25 °C (77 °F)	SAE30, SAE 10W-30 or 10W-40
0°–25 °C (32°–77 °F)	SAE20, SAE10W-30 or 10W-40
Below 0 °C (32 °F)	SAE10W, SAE10W-30 or 10W-40

NOTE

When using oil from a different supplier or different viscosity than the previous oil, be sure to drain all of the old oil before refilling with new oil. Do not mix different types.

6. Start the engine and run it for 10 to 15 minutes, checking for leaks at the oil pan drain plug.

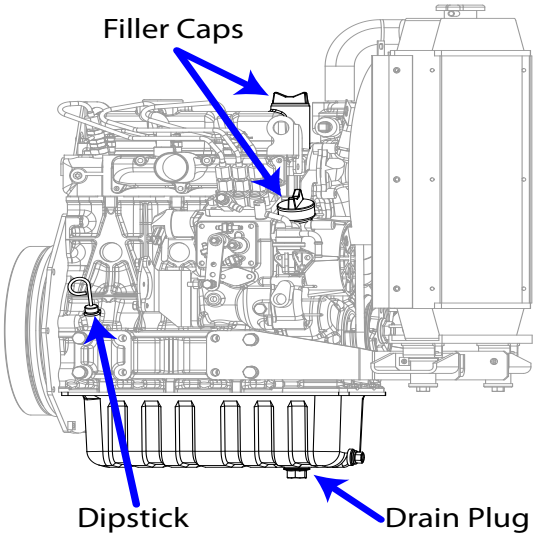

5.4-10 Check and replenish the radiator coolant level

Kubota recommends checking the coolant level daily.

Check and replenish the coolant

1. Check the coolant level via the recovery tank. Coolant should be between the FULL and LOW marks.

2. If the coolant is too low, determine the cause and remedy it by following Step A or B below:

A - Leaks

3. Inspect both drain plugs and the radiator hoses. Repair or replace faulty or leaking components.

4. Pre-mix 50% long-life coolant and 50% clean, soft water, stirring it well, and replenish the recovery tank up to the FULL line.

NOTE

Do not mix different brands of coolant. If the coolant in the system cannot be identified, completely drain the system and refill with new coolant. Refer to 5.2-11 for instructions on draining the coolant.

B - Evaporation

5. Replenish the recovery tank up to the FULL line with clean, soft water.

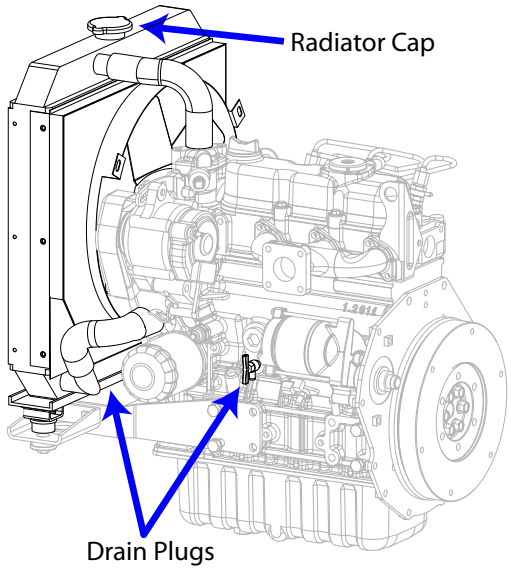

5.4-11 Drain and refill the radiator

Kubota recommends completely draining and replacing coolant once a year.

NOTE

Do not remove the radiator cap until the coolant temperature has lowered.

1. Place containers under the drain plugs to catch the coolant. One drain plug is located on the underside of the radiator, and the other on the body of the engine.
2. Open both drain plugs, and slowly open the radiator cap to relieve pressure. Open the radiator cap fully so the coolant can start to drain.
3. Place a container under the recovery tank, and disconnect the overflow hose from the underside of the tank. Drain the tank.
4. When all coolant has drained from the radiator, engine, and recovery tank, reconnect the recovery tank hose, and close both drain plugs.
5. Pre-mix 50% long-life coolant and 50% clean, soft water, stirring it well.
6. Refill the radiator, venting air from the upper and lower radiator hoses by jiggling them while filling the radiator with coolant. The coolant should reach the FULL line on the recovery tank, but not go past it.
7. Securely close the radiator cap.
8. Start the engine and run it for a few minutes, then shut it off.
9. Check the coolant level on the recovery tank once again, and add more coolant to the tank if needed.

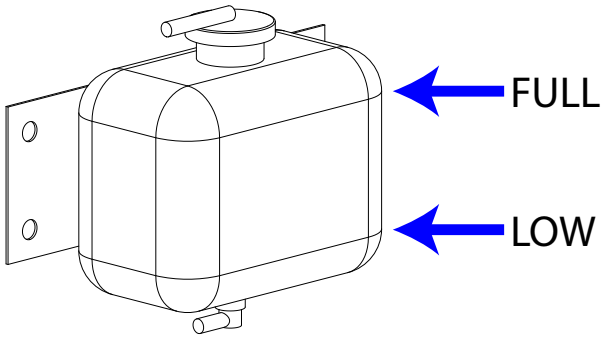

5.4-12 Engine Parameter Display

KAntrak 1700

KAntrak 1700 display allows users to easily monitor diagnostic trouble codes or critical engine faults such as oil pressure and water temperature as well as providing an alarm system to alert the user when the Engine Control Unit (ECU) detects an engine fault.



Menu browsing

The KAntrak 1700 unit has three buttons for different features selection on its dynamic style menu system. These buttons, located at the bottom of the unit, are used to navigate on the menu.

During normal operation, the buttons have no specific functions. When pressing any button once, a dynamic pop-up menu appears which contains some function icons aligned above the associated buttons. The user selects the required function from the displayed menu. When a fault occurs, the amber light on top of the KAntrak unit and the Check Engine Indicator Light on the Engine Control Console illuminate and stays on until the fault is corrected.

Display modes

KAntrak 1700 unit has four display modes and can be accessed through the Setting Menu by selecting the tool.

1. Single Screen. This mode is used to monitor one parameter at a time. The screen also displays the associated parameter icon, the description, the units and a bar graph.
2. Dual Screen. This mode is used to monitor two parameters at a time. The screen also displays the associated parameter icon and units.
3. Multi Screen. This mode is used to monitor a list of four(4) parameters selected by the user. Every item is listed with its associated icon and units.
4. DTC Screen. This mode is used to display Data Trouble Codes.

Diagnostic Trouble Codes (DTC)

DTCs are manufacturer's codes to indicate specific engine malfunction. These codes appear on the KAntrak screen whenever an engine malfunction occurs. For DTCs, see *Section 5.2-10a Kubota 972 and 2503 - DTC*.

Selecting DTC Screen

The DTC Screen mode is used to display Data Trouble Codes. The header contains the total active/ inactive faults, the associated Suspect Parameter Number (SPN) and Failure Mode Identifier (FMI), as well as the number of occurrences (OCC).

1. To access the DTC Screen, select the tool to access the Settings Menu.
2. On the Display Mode option, select DTC.
3. To display the DTC detailed info, select the **?** function. A detailed screen of the selected DTC including the SPN description (Header), the FMI Description (Header), the fault status (Status), the SPN Number (SPN), the FMI Number (FMI), the total number of occurrences (OCC) and the related node source address (SRC) then appears.
4. Note the SPN Number on the display and check it against the list found in *Section 5.2-10a Kubota 972 and 2503 - DTC.* Look for the Detected Item/ Hardware information and correct the error. Once the fault is fixed, the amber lights on KAntrak unit and on Engine Control Console turns off.
5. To exit from DTC Screen, select tool to continue browsing for other parameters. After a few seconds, the menu is hidden.

5.4-12a Kubota 972 and 2503 - DTC

DTC	(J1939) SPN	(J1939) FMI	Detected Item/Hardware	2503	972
16	636	8	-Mechanical Misalignment between cam and crank	✓	×
87	94	1	-Fuel Pressure Abormality (Low Side)	✓	×
88	94	0	-Fuel Pressure Abormality (High Side)	✓	×
91	94	4	-Sensor/Wiring Harness Open/Short To Ground -Sensor Malfunction	✓	×
92	94	3	-Sensor/Wiring Harness Short To Power -Sensor Malfunction	✓	×
107	106	4	-Sensor/Wiring Harness Open/Short To Ground -Sensor Malfunction	✓	×
108	106	16	-Sensor/Wiring Harness Short To Power -Sensor Malfunction	✓	×
111	105	15	-Intake air temperature abnormality (High Side Stage 1)	✓	✓
112	105	4	-Sensor/Wiring Harness Open/Short To Ground -Sensor Malfunction	✓	✓
113	105	3	-Sensor/Wiring Harness Short To Power -Sensor Malfunction	✓	✓
116	110	15	-Engine Coolant Temperature Abnormality (High Side Stage 1)	✓	✓
117	110	4	-Sensor/Wiring Harness Short To Ground -Sensor Malfunction	✓	✓
118	110	3	-Sensor/Wiring Harness Short To Power -Sensor Malfunction	✓	✓
121	51	1	-Throttle Position Sensor Malfunction	✓	×
122	51	4	-Throttle Position Sensor 1 Signal Voltage Low	✓	✓
123	51	3	-Throttle Position Sensor 1 Signal Voltage High	✓	✓
127	105	0	-Intake Air Temperature Higher Than Expected Stage 2	✓	✓
130	3217	2	-Exhaust leaks upstream or near the HEGO sensor -Fuel Pressure abnormality -An Injector that is stuck closed -Wiring harness open/short/damaged -Sensor Malfunction	×	✓
134	3217	5	-Open feed circuit to O2 heater -Open heater ground circuit -Open or shorted to ground O2 signal wire -Open sensor ground (5Vrtn1) -Inoperative sensor	✓	✓
135	523719	2	-Wiring harness open/short/damaged -O2 heater malfunction	×	✓
154	3227	5	-Open feed circuit to O2 heater -Open heater ground circuit -Open or shorted to ground O2 signal wire -Open sensor ground (5Vrtn1) -Inoperative sensor	✓	×

5.4-12a Kubota 972 and 2503 - DTC (continued)

DTC	(J1939) SPN	(J1939) FMI	Detected Item/Hardware	2503	972
171	4237	0	-Exhaust leaks upstream or near the HEGO sensor -reduced fuel supply pressure to the fuel injection system -a inoperative sensor -an injector that is stuck closed or dirty -weak spark or lack of spark to a cylinder -a MAP sensor that indicates pressure tjat is lower that the true pressure	✓	×
172	4237	1	-An inoperative O2 sensor -High fuel supply pressure or temperature	✓	×
182	174	4	-Operating in a frigid atmosphere -Sensor out of calibration	✓	×
183	174	3	-Operating in a hot environment -Sensor out of calibration	✓	×
201	651	2	-Injector Malfunction	×	✓
202	652	2	-Injector Malfunction	×	✓
203	653	2	-Injector Malfunction	×	✓
217	110	0	-Engine Coolant Temperature Exceeds Stage 2	✓	✓
219	515	15	-Engine over speed condition, stuck throttle, large vacuum leak into intake manifold after throttle blade	✓	×
219	190	0	- Engine over speed condition, stuck throttle, large vacuum leak into intake manifold after throttle blade	×	✓
221	51	51	-Throttle Position Sensor Malfunction	✓	×
222	3673	4	-Throttle position sensor circuit in the harness short to ground -Throttle position sensor malfunction	✓	✓
223	3673	3	-Throttle position sensor circuit in the harness short to power -Throttle position sensor malfunction	✓	✓
237	102	4	-Sensor/Wiring harness open/short/damage -Sensor Malfunction	×	✓
238	102	3	-Sensor/Wiring Harness Short To Power -Sensor Malfunction	×	✓
261	651	5	-Loss of 12.0 V feed to injector -Open injector coil -Open or shorted to ground injector driver circuit in engine harness	✓	×
262	651	6	-Injector coil shorted internally -Injector driver circuit shorted to voltage between injector and ECM	✓	×
264	652	5	-Loss of 12.0 V feed to injector -Open injector coil -Open or shorted to ground injector driver circuit in engine harness	✓	×

5.4-12a Kubota 972 and 2503 - DTC (continued)

DTC	(J1939) SPN	(J1939) FMI	Detected Item/Hardware	2503	972
420	3050	n/a	n/a	✓	×
524	100	1	-Low Oil Pressure	✓	✓
562	168	17	-Wiring harness open/short/damage -Battery abnormality	✓	✓
563	168	15	-System voltage abnormality (High Side)	✓	✓
601	628	13	-Faulty ECU -ROM Malfunction	✓	✓
604	523720	12	-Faulty ECU -RAM Malfunction	×	✓
604	630	12	- Faulty ECU	✓	×
605	523721	2	-EEPROM Malfunction	×	✓
606	629	12	-Microprocessor malfunction	×	✓
606	629	31	-Faulty ECU	✓	×
627	1347	2	-Wiring harness open/short/damage -Fuel Pump malfunction	×	✓
627	1348	5	-Open coil in relay -Open in relay driver circuit in engine harness	✓	×
628	1347	5	-Relay pull in coil shorted internally -Relay driver circuit shorted to ground in wire harness	✓	×
629	1347	6	-Shorted relay pull in coil -Relay driver circuit shorted to voltage in wire harness	✓	×
642	1079	4	-Wiring harness short to ground -ECM malfunction	✓	×
642	3509	4	-Wiring harness open/short/damage -ECU malfunction	×	✓
643	1079	3	-Wiring harness short to 12.0 V power -ECM malfunction	✓	×
652	1080	4	-Wiring harness short to ground -ECM malfunction	✓	×
653	1080	3	-Wiring harness short to 10.0 V power -ECM malfunction	✓	×
686	1485	4	-Short to ground in relay pull in coil -Short to ground in relay driver circuit in wire harness	✓	×
687	1485	3	-Shorted relay pull in coil -Relay driver circuit shorted to voltage in wire harness -Power Relay Error	✓	✓
1111	515	16	-Engine overspeed condition, faulty Crank sensor or input	✓	×
1112	515	0	-Engine overspeed condition, faulty Crank sensor or input	✓	×
1151	4236	0	•exhaust leaks upstream or near the HEGO sensor • reduced fuel supply pressure to the gaseous fuel control system • a fuel supply or manifold leak • a non-responsive HEGO sensor	✓	×

5.4-12a Kubota 972 and 2503 - DTC (continued)

DTC	(J1939) SPN	(J1939) FMI	Detected Item/Hardware	2503	972
1152	4236	1	• high fuel supply pressure to the gaseous fuel control or faulty pressure regulator • a non-responsive HEGO sensor	✓	×
1153	4236	0	• exhaust leaks upstream or near the HEGO sensor • reduced fuel supply pressure to the gaseous fuel control system • a fuel supply or manifold leak • a non-responsive HEGO sensor	✓	×
1154	4236	1	• high fuel supply pressure to the gaseous fuel control or faulty pressure regulator • a non-responsive HEGO sensor	✓	×
1155	4236	0	• exhaust leaks upstream or near the HEGO sensor • reduced fuel supply pressure • an injector that is stuck closed	✓	×
1156	4236	1	• high fuel supply pressure to the fuel injection system • a non-responsive HEGO sensor • an injector that is stuck open	✓	×
1161	4237	0	• exhaust leaks upstream or near the HEGO sensor • reduced fuel supply pressure to the gaseous fuel control system • a fuel supply or manifold leak • a non-responsive HEGO sensor	✓	×
1162	4237	1	• high fuel supply pressure to the gaseous fuel control or faulty pressure regulator • a non-responsive HEGO sensor	✓	×
1163	4237	0	• exhaust leaks upstream or near the HEGO sensor • reduced fuel supply pressure to the gaseous fuel control system • a fuel supply or manifold leak • a non-responsive HEGO sensor	✓	×
1164	4237	1	• high fuel supply pressure to the gaseous fuel control or faulty pressure regulator • a non-responsive HEGO sensor	✓	×
1165	3050	11	n/a	✓	×
1166	3050	11	n/a	✓	×
1173	520620	31	n/a	✓	×
1601	523710	2	• ETV malfunction	×	✓
1602	523710	0	• ETV malfunction	×	✓
1603	523710	1	• ETV malfunction	×	✓
1604	523711	2	• ETV malfunction	×	✓
1605	523712	2	• ETV malfunction	×	✓
1606	523712	1	• ETV malfunction	×	✓
1607	523712	7	• ETV malfunction	×	✓
1608	523713	0	• ETV malfunction	×	✓
1609	523714	2	• Sensor malfunction	×	✓

5.4-12a Kubota 972 and 2503 - DTC (continued)

DTC	(J1939) SPN	(J1939) FMI	Detected Item/Hardware	2503	972
1612	629	31	• Faulty ECU	✓	×
1613	629	31	• Faulty ECU	✓	×
1614	629	31	• Faulty ECU	✓	✓
1614	703	4	• Wiring harnessopen/short/damage • The circuitabnormality	×	✓
1615	629	31	• Faulty ECU	✓	×
1615	703	3	• Wiring harness short to power • The circuit abnormality	×	✓
1616	629	31	• Faulty ECU	✓	×
1616	523715	2	• A/D Converter malfunction	×	✓
1617	523716	2	• Exhaust leaks upstream or near the HEGO sensor • Fuel pressure abnormality • An injector that is stuck closed • Wiring harness open/short/damage • O2 sensor malfunction	×	✓
1618	523717	2	• TPS malfunction	×	✓
1619	523718	1	• TPS malfunction	×	✓
1621	523722	12	• System LSI malfunction	×	✓
1624	523724	31	• Wiring harness short to power • Both Lock Off Valve andn Fuel Shutoff Solenoid malfunction	×	✓
1625	523725	2	• Wiring harness open/short/damage • Fuel Shutoff Solenoid malfunction	×	✓
2111	51	7	• TPS malfunction	✓	×
2112	51	7	• TPS malfunction	✓	×
2115	51	0	• Wiring harness open/short/damage • FPP malfunction • IVS malfunction	✓	×
2116	29	0	• Wiring harness open/short/damage • FPP malfunction • IVS malfunction	✓	×
2122	91	4	• Wiring harness open/short/damage • APS malfunction	×	✓
2122	91	3	• Wiring harness open/short/damage • FPP malfunction	✓	×
2123	91	4	• Wiring harness open/short/damage • FPP malfunction	×	✓
2123	91	3	• Wiring harness open/short/damage • FPP malfunction	✓	×
2127	29	4	• Wiring harness open/short/damage • APS malfunction	×	✓
2127	29	4	• Wiring harness open/short/damage • FPP malfunction	✓	×
2128	29	3	• Wiring harness open/short/damage • APS malfunction	×	✓

5.4-12a Kubota 972 and 2503 - DTC (continued)

DTC	(J1939) SPN	(J1939) FMI	Detected Item/Hardware	2503	972
2128	29	3	• Wiring harness open/short/damage • FPP malfunction	✓	×
2135	51	2	• TPS malfunction	×	✓
2135	51	31	• TPS malfunction	✓	×
2138	91	2	• APS malfunction	×	✓
2139	91	1	• Wiring harness open/short/damage • FPP malfunction • IVS malfunction	✓	×
2140	29	1	• Wiring harness open/short/damage • FPP malfunction • IVS malfunction	✓	×
2300	1268	5	• a short to ground or open circuit in the harness • an open internal to the primary coil	✓	×
2301	1268	6	• a short to power in the harness • a short internal to the primary coil	✓	×
2303	1269	5	• a short to ground or open circuit in the harness • an open internal to the primary coil	✓	×
2304	1269	6	• a short to power in the harness • a short internal to the primary coil	✓	×
2306	1270	5	• a short to ground or open circuit in the harness • an open internal to the primary coil	✓	×
2307	1270	6	• a short to power in the harness • a short internal to the primary coil	✓	×
2309	1271	5	• a short to ground or open circuit in the harness • an open internal to the primary coil	✓	×
2310	1271	6	• a short to power in the harness • a short internal to the primary coil	✓	×

5.5 Base

5.5-1 Inspect and torque the wheel bolts and nuts

You must do a check of the torque on all wheel nuts and wheel bolts at pre-delivery, after 8 hours of operation, and at weekly intervals. Use the following procedure.

1. Confirm that each wheel fastener is torqued to 140 lbf•ft (190 N•m). Use the tightening sequence below.

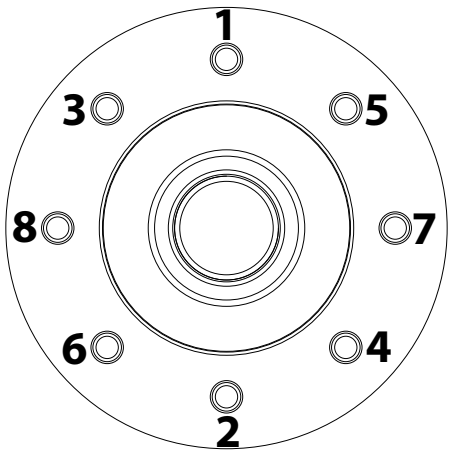

2. Torque again as needed until all fasteners are correctly torqued.

5.5-2 Install and torque the wheels

When a wheel is removed or replaced, you must follow the procedure below to make sure it is installed correctly.

1. Inspect wheel fastener threads for damage of defects. Replace if defective.
2. Clean the mounting surfaces of the hub and wheel rim of debris, rust, excess paint, etc.
3. Mount wheel on the hub, centering mounting holes on the wheel studs or bolt holes. Use appropriate lifting device as required.
4. Install wheel nuts or wheel bolts and hand tighten to center the rim.
5. Torque nuts or bolts to approximately 50 lbf•ft (68 N•m) using the tightening sequence in *5.5-1*.
6. Torque again to 100 lbf•ft (135 N•m) using the same sequence.
7. Torque again to 140 lbf•ft (190 N•m) using the same sequence.
8. Repeat the tightening sequence to confirm that none have changed from 140 lbf•ft (190 N•m). If any are found below 140 lbf•ft (190 N•m), repeat complete sequence until there is no change in torque values. If possible, drive the machine prior to checking torques.
9. Check torque values after 8 hours of operation and then at weekly intervals.

5.5-3 Grease points

Grease fitting locations

1. There are 14 to 20 grease fittings, depending on options. They are located:
   - On each outrigger foot (1 fitting per outrigger, if equipped, 4 per unit).
   - On the top and bottom of the axle knuckles (2 fittings per knuckle, 8 per unit).
   - On each drive shaft universal joint (1 fitting per universal joint, 2 per 2WD unit, 4 per 4WD unit).
   - On each tie rod end (1 fitting per tie rod end, 2 per unit).
   - On each end of the steer cylinder (2 fittings per unit).

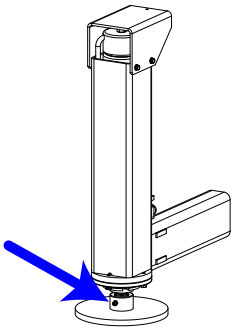

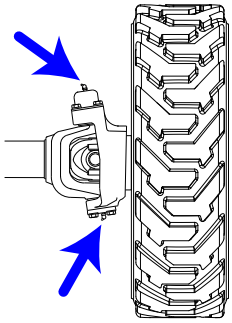

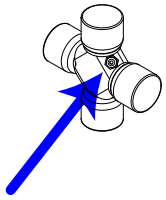

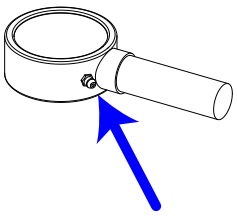

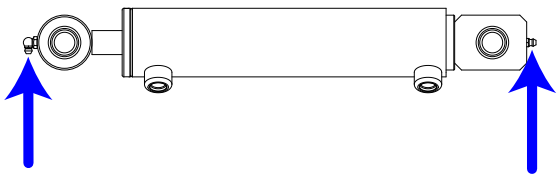

Apply the grease

1. Remove the cap from the grease fitting.
2. Using a clean rag, wipe off any dirt or debris from the grease fitting.
3. Connect a grease gun to the grease fitting, and pump until a small amount of grease can be seen coming out around the joint or bearing.
4. Disconnect the grease gun.
5. Wipe off any excess grease from around the joint or bearing, and from the grease fitting.
6. Replace the grease fitting cap.

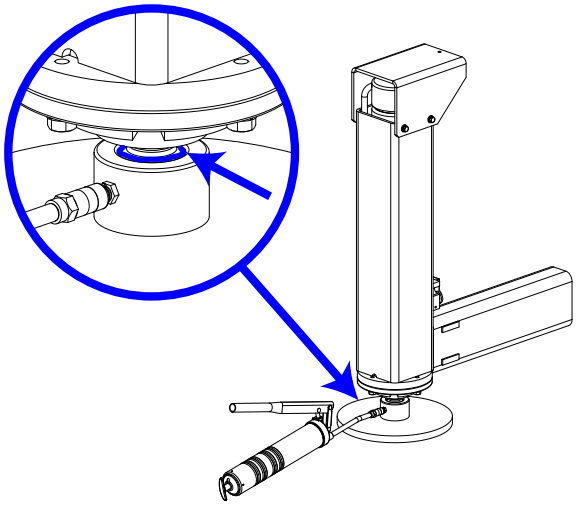

5.5-4 Reconnecting the platform control box for use from the ground

1. To facilitate servicing the MEWP, the platform control box may be removed from the platform, and reconnected inside the hydraulic cabinet, to allow functions to be accessed from the ground.
2. From the platform, remove the quick release pins (x2) securing the platform control box to the control box mount.
3. Disconnect the control box cable from the scissor control cable (swing down the small latches on each end of the connector and pull the connectors apart). The connectors are located near the front right corner of the platform on the underside.

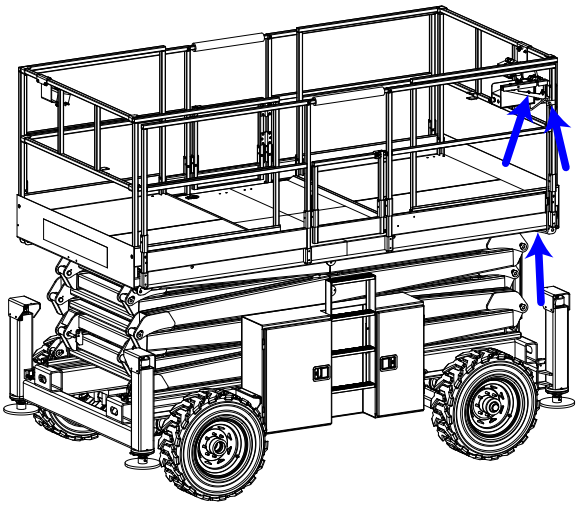

4. Bring the control box down from the platform to the ground.
5. Locate the control cable connectors inside the hydraulic cabinet.

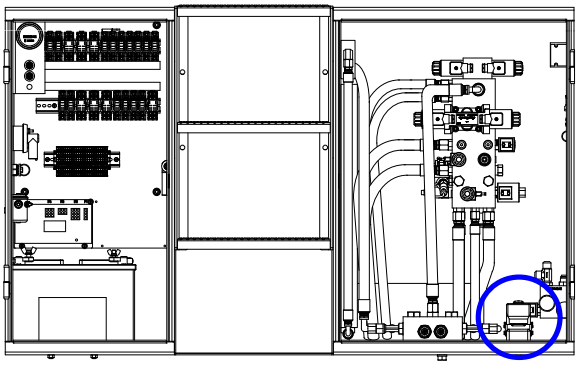

6. Disconnect the existing control cable connector by swinging down the latches on each end, and pulling the connectors apart.

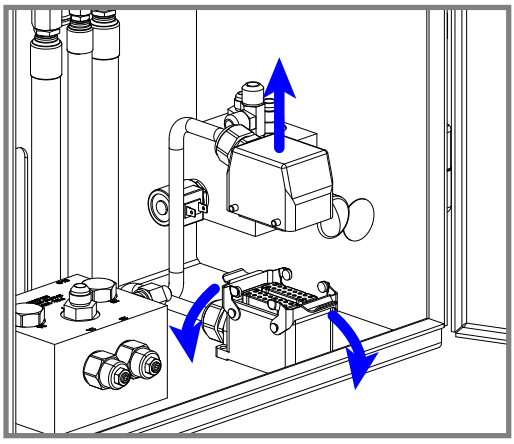

7. Plug the control box control cable connector in its place. Swing up the latches to lock them together.

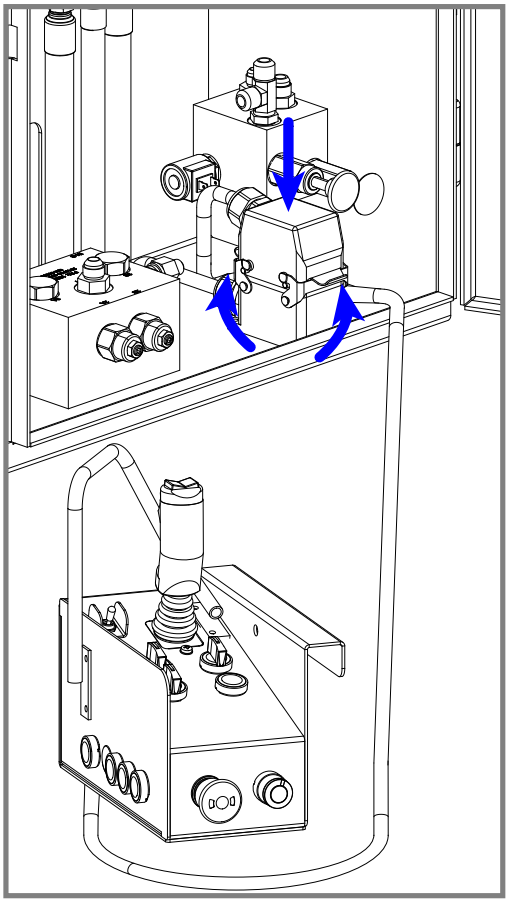

8. The control box functions may now be accessed from the base.

5.5-5 Electronic tilt switch setup procedure

Machines that are not equipped with outriggers have an electronic tilt switch located inside the engine compartment. During operation, the switch monitors machine tilt front to back, and side to side. MEWP tilt is measured relative to a learned *zero* position.

The zero position is calibrated using the following set-up procedure, based on the position of the machine with the platform leveled and fully lowered.

Two LED indicator lights on the top of the switch show operating conditions.

Replace the the tilt switch

Follow this procedure to install and program a new zero position in a replacement tilt switch.

NOTE

Make sure part number of old and new tilt switch are the same.

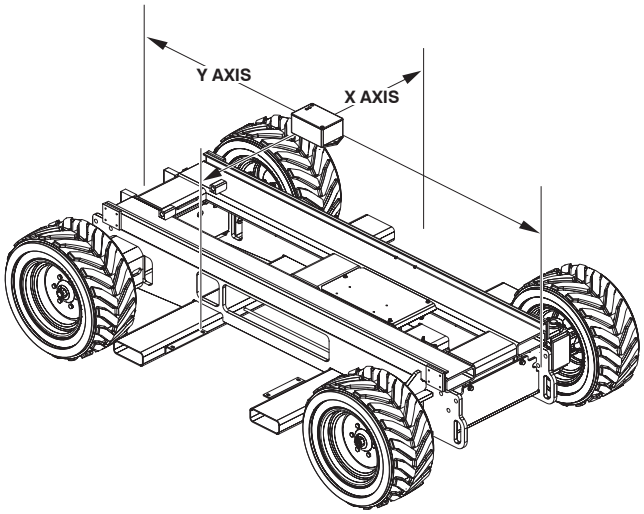

1. Park MEWP on a firm level surface.
2. Fully lower the platform.
3. Chock or block wheels to keep the MEWP from rolling forward or backward.
4. Push in emergency stop buttons and turn main power disconnect switch off.
5. Disconnect tilt switch from 4 pin connector.
6. Remove old tilt switch from mount.
7. Install the new switch in the same orientation as the old switch. Connect switch plug to 4 pin connector.

NOTE

The tilt switch circuit is only powered when controls are powered up.

8. Turn main power disconnect switch on.
9. Select Off–Lift–Drive key switch to *Lift* position or *Drive* position.
10. Pull out all emergency stop buttons.
11. Verify switch is powered. The red or green LED indicator lights should be solid.
12. On the back side of the switch, press and release the Set-up button 3 times.

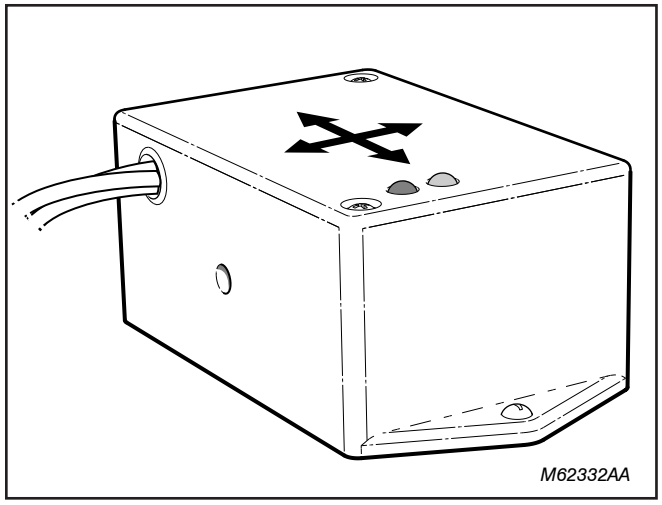

13. The red LED then flashes for 4 seconds during a *stabilization* period.
14. Both LEDs then flash for 1 second, indicating the switch is learning the new *zero* position.
15. When both LEDs are on continuously, it indicates the switch has learned the new zero position.
16. The green LED then flashes and the red LED stays on for 2 seconds indicating the switch is verifying the new zero position.

17. The green LED stays on continuously indicating the switch is ready for normal operation.
18. Turn main power disconnect switch off.
19. Push in all emergency stop buttons.
20. Remove wheel chocks.

Reprogram an existing tilt switch

Follow this procedure to reprogram an existing tilt switch. Reprogramming the switch records a new *zero* position.

1. Park MEWP on a firm level surface.
2. Fully lower the platform. Reprogramming the switch learns
3. Chock or block wheels to keep the MEWP from rolling forward or backward.

NOTE

The tilt switch circuit is only powered when controls are powered up.

4. Turn main power disconnect switch on.
5. Select Off–Lift–Drive key switch to *Lift* position or *Drive* position.
6. Pull out all emergency stop buttons.
7. Verify switch is powered. The red or green LED indicator lights should solid.
8. On the back side of the switch, press and hold the Set-up button for 3 seconds.

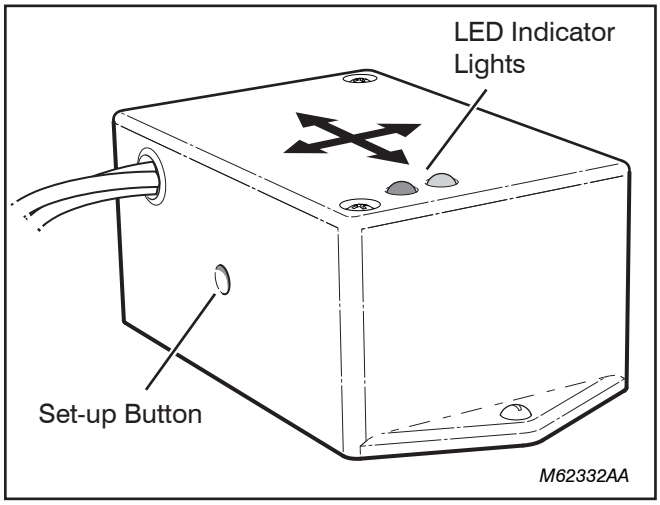

9. Both LEDs turn off, then begin flashing for a 5 second period.
10. During this 5 second period, press and release the Set-up button 3 times.
11. The red LED then flashes for 4 seconds during a *stabilization* period.
12. Both LEDs then flash for 1 second indicating the switch is learning the new *zero* position. When both LEDs are on continuously, it indicates the switch learned the new zero position.
13. The green LED then flashes and the red LED stays on for 2 seconds indicating the switch is verifying the new zero position.
14. The green LED stays on continuously indicating the switch is ready for normal operation.

NOTE

If the Set-up button is not pressed 3 times during Step 10, the switch exits the program mode and returns to normal operation using the previous zero point.

15. Turn main power disconnect switch off.
16. Push in all emergency stop buttons.
17. Remove wheel chocks.

Tilt switch operation

The following describes LED operation with the system powered.

Green LED	Red LED	Meaning
ON	**OFF**	The green LED on continuously indicates normal operation. Both tilt axes are within the specified degrees of the learned zero position. The green LED flashing indicates the MEWP is moving in or out of tilt angle limits. The time delay has not occurred yet.
OFF	**ON**	The red LED is on continuously when the tilt angle on one or more axes is off more than the allowable degrees from the zero position.
ON	**ON**	Both LEDs on continuously indicates a fault in the system is detected. The switch does not function. After a period of 5 seconds or on power up, the switch attempts to return to normal operation. If the fault is still detected, both LEDs remain on.

5.5-6 Adjust the brake caliper

1. Prime the brake manifold and brake caliper by starting the engine and driving the MEWP backward and forward approximately 10 ft (3 m).
2. Raise the platform, and deploy the maintenance stand.
3. Shut off the engine and chock or block the wheels.
4. Remove the orange brake pump handle from the clips in the electrical/hydraulic cabinet, and insert it in the pump valve socket.

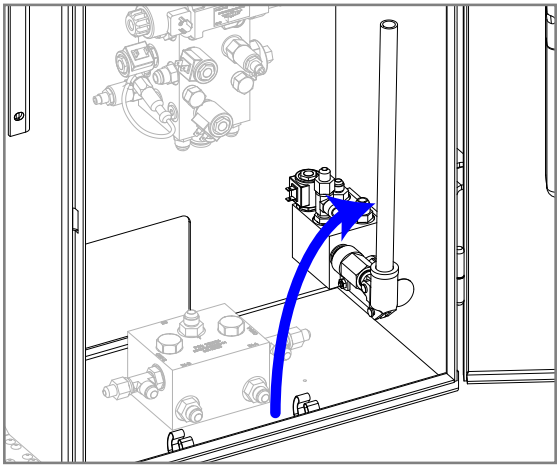

5. Push in the black knob on the brake manifold release valve, then pump the handle on the pump valve back and forth 1 to 3 times until firm resistance is felt (approximately 60–70 lb [267–311 N] force). The brake should now be released.

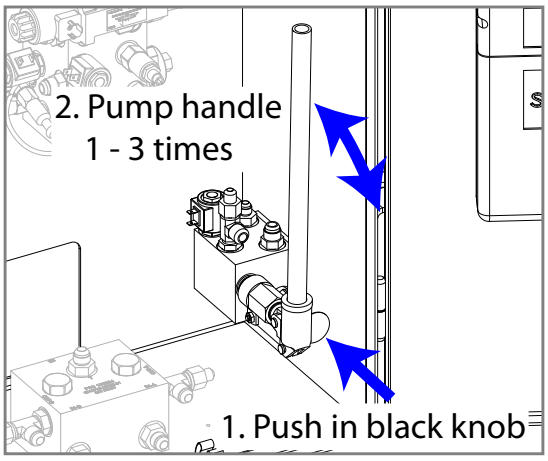

NOTE

If the brake manifold requires more than 3 pumps, or the brake does not release, the brake caliper may need to be bled. Refer to 5.5-7 Bleed the brake caliper.

6. On the brake caliper, remove the cap and turn the adjusting screw clockwise until the calipers clamp onto the disc brake.

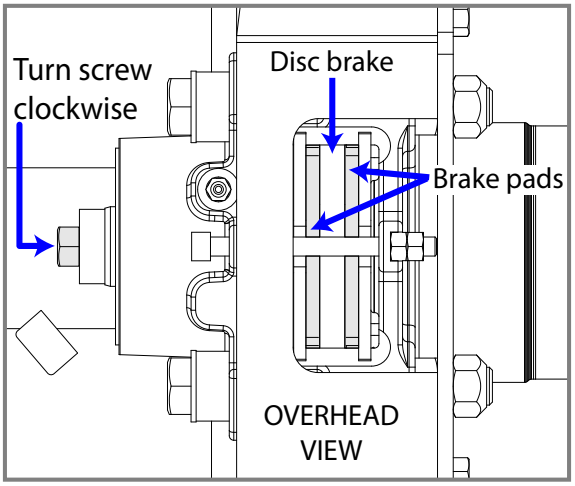

7. On the adjustment bolt, loosen the hex nut and turn the bolt clockwise until it makes contact with the bump stop, then back it off counterclockwise 1/4 turn.

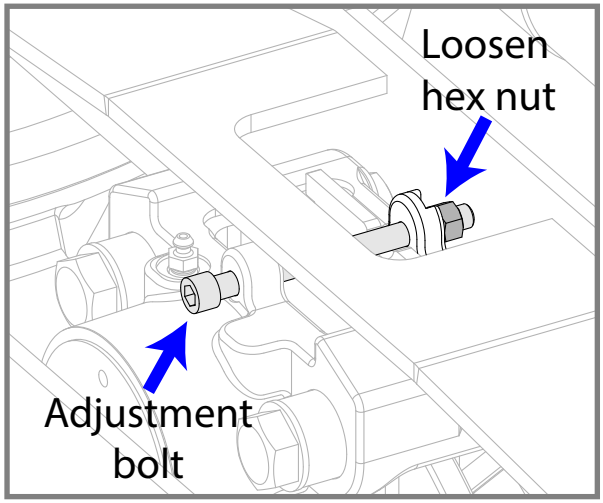

8. Hold the bolt in place while tightening the hex nut against the inner hex nut to 30–35 lbf•ft (41–47.5 N•m)

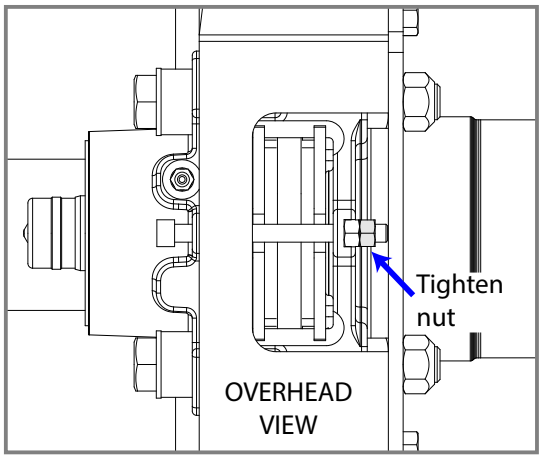

9. Back off the adjusting screw 1/2 turn counterclockwise. Replace the cap.

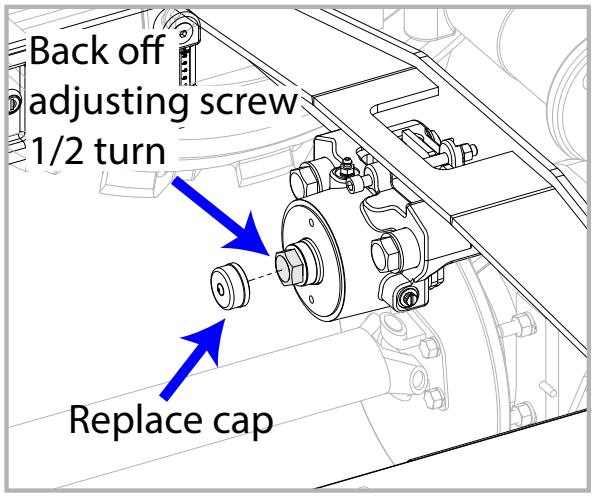

10. Remove the manual brake pump handle, and place it back in the retaining clips.

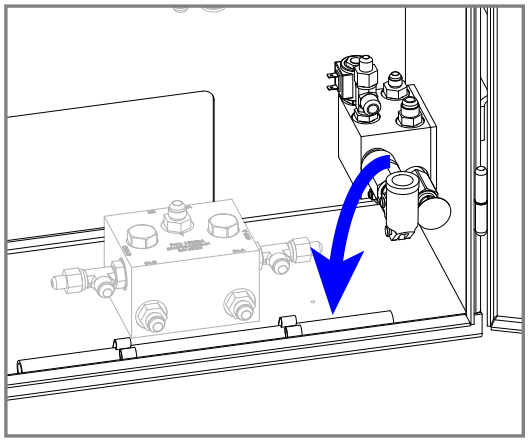

11. Pull out the black brake valve knob to reset the brake.

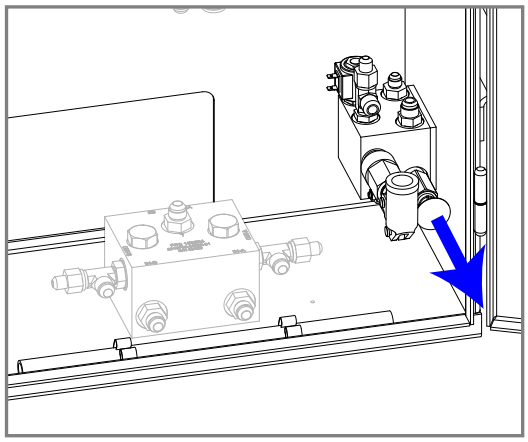

12. Start the engine, stow the maintenance stand, and lower the platform.
13. Shut off the engine.

5.5-7 Bleed the brake caliper

1. Chock or block the wheels.
2. Start the engine, raise the platform, and deploy the maintenance stand.
3. Shut off the engine.
4. Locate the brake caliper in front of the rear axle, then locate the bleeder screw on the top of the brake caliper, and remove the cap.

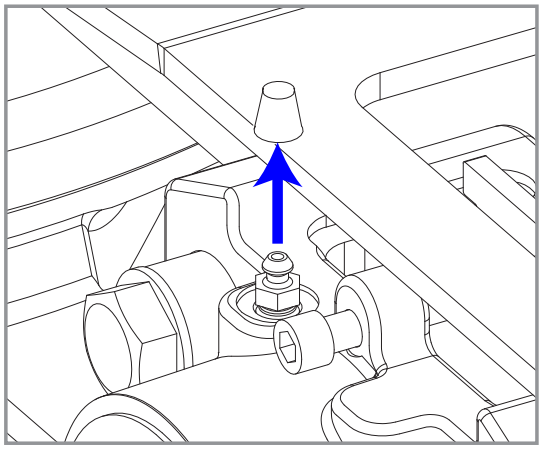

5. Attach a piece of clear hose to a standard bleeder fitting, and attach the bleeder fitting to the bleeder screw. Place the other end of the hose into a container suitable for catching hydraulic oil.

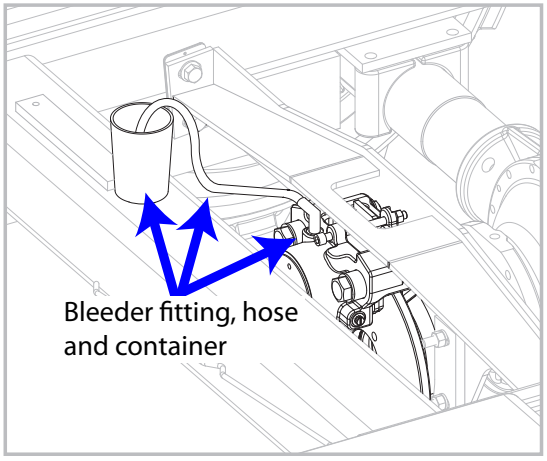

6. Open the bleeder screw 1/4 turn counterclockwise.

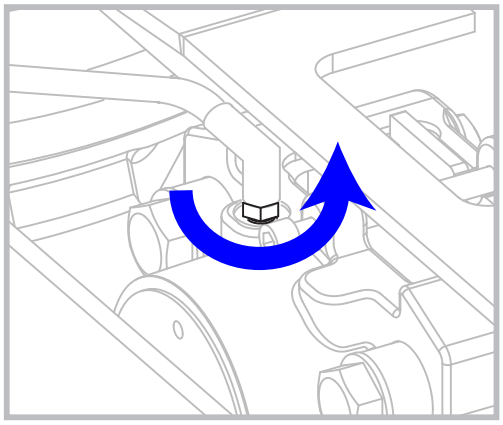

7. In the electrical/hydraulic cabinet, push in the black brake release knob.

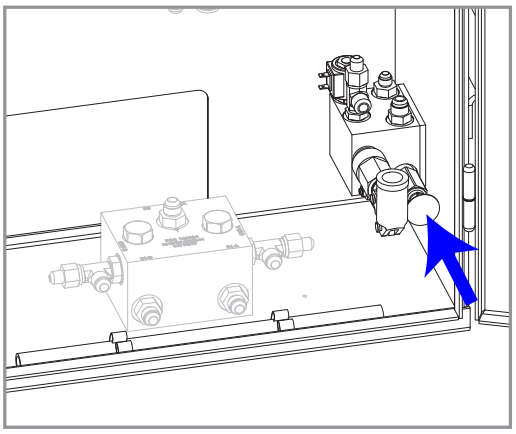

8. Slowly pump the brake pump repeatedly until air bubbles are seen in the line. Continue pumping until there are no more air bubbles.

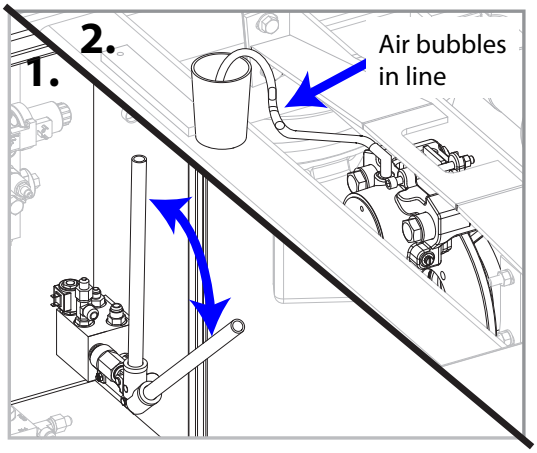

9. Close the bleeder screw.

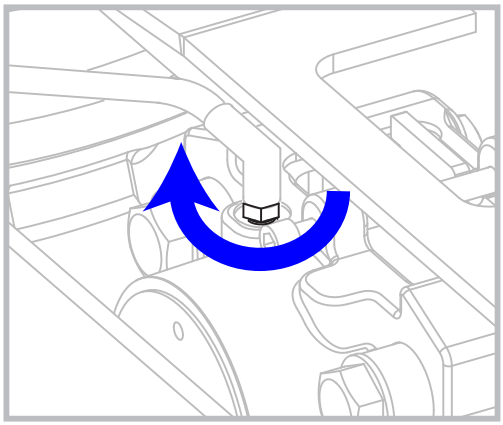

10. Pull out the black brake release knob.

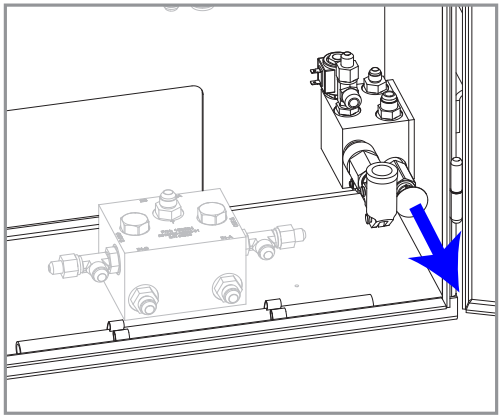

11. Disconnect the bleeder fitting and hose, and replace the bleeder screw cap.

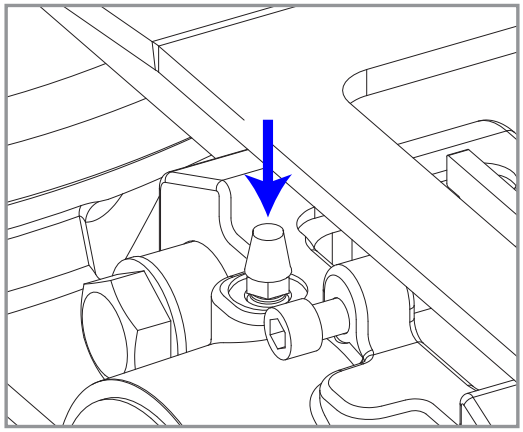

12. Start the engine, stow the maintenance stand, and lower the platform.

5.5-8 Front axle hub procedure

For front axle hub components, refer to your MEWP's parts manual.

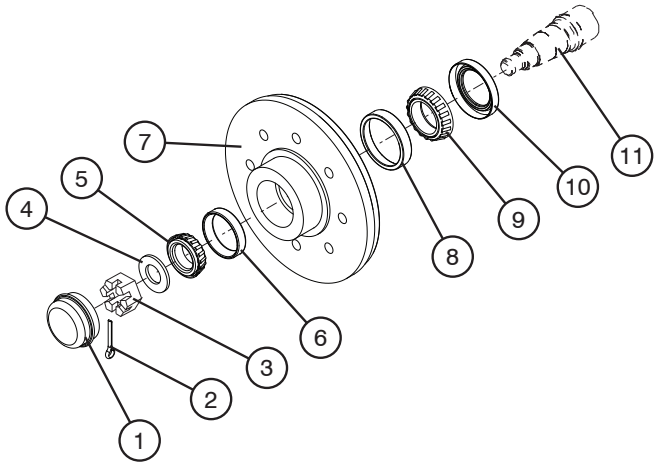

NOTE

Keep work area clean and visibly free from contamination at all times

1. Ensure MEWP is parked on a firm, level surface. Chock or block the wheels to keep the MEWP from rolling forward or backward.
2. Fully lower the platform.
3. Using a suitable lifting device (or outriggers if equipped), lift the steer-axle end of the MEWP.

CAUTION

Use a suitably-rated support stand to support MEWP while performing the following operations

4. Turn main power disconnect switch off.
5. Remove wheel assembly.
6. Remove dust cap (1) to access internal components of hub assembly.
7. Pull cotter pin (2) out of spindle arm (11) and then remove castle nut (3), washer (4) and outer bearing cone (5). Dispose of dust cap, cotter pin, castle nut, washer, and outer bearing cone.
8. Flip hub over and then remove and discard inner bearing cone (8) and grease seal (10).
9. Remove and discard both inner and outer bearing cups (6, 8) from hub.
10. Remove grease from spindle arm and hub and look for signs of visible damage. If damage is found on the hub or on the spindle arm, contact Skyjack Service Department immediately.
11. Press new bearing cups (6, 8) into hub.
12. Pack replacement inner and outer bearings by either pressing wheel bearing grease into each roller by hand or using a bearing packer and grease gun. Ensure that grease is forced into all surfaces of the bearing

NOTE

Use recommended wheel bearing grease only—NLGI (National Lubricating Grease Institute) Grade #2 or equivalent

NOTE

The bearings must be packed before installing

13. Install replacement inner bearing in the race and then seat the new grease seal. Flip hub over and install replacement outer bearing.
14. Install hub on the spindle.
15. Install replacement washer and replacement castle flanged nut. Hand tighten the castle flanged nut until it touches the washer. Turn hub by hand to ensure smooth running. No resistance should be felt at this time.
16. Take a torque wrench and set it at 30 lbf•ft (41 N•m), and while continuously rotating hub, tighten castle flanged nut. Resistance increases while hub is being turned and nut tightened.
17. Using an open-ended wrench, loosen castle flanged nut a 1/4 turn while turning the wheel hub. It should turn easily. The nut should not come completely loose.
18. Using a torque wrench set to 15 lbf•ft (20 N•m), tighten castle flanged nut. Turn wheel hub and check for smooth turning.

19. Check for alignment of the castle flanged nut with one of the cross holes in spindle arm. If required, loosen nut to align with nearest hole. Use an open-ended wrench to be able to see the cross holes. The nut should not be turned more than 15 degrees.
20. Secure with new cotter pin. Check again for smooth turning of wheel hub. The wheel hub should turn but with slight resistance.
21. Grab the top and bottom of the hub and check for play. There should be no evidence of play.
22. Install dust cap back on hub assembly.
23. Install wheel assembly. Torque nuts or bolts to 140 lbf•ft (190 N•m).
24. Repeat Steps 5–22 for the other hub assembly.
25. Lower the MEWP.

5.6 Hydraulics

5.6-1 Tightening and torque recommendations for hydraulic couplings and hoses

General work practices

1. All components must be free of damage or contamination. O-rings cannot be reused anytime the component has been installed beyond finger tight. Clean or replace components, as required.
2. Over-tightening a coupling may result in overstressing or cracking, and may lead to leaking or failure.
3. When tightening hose couplings, ensure the hose does not twist on the adapter. Twisting the hoses can shorten hose life and scar the sealing surfaces which can create leaks.
4. When tightening hose couplings, use a torque wrench (with crow's foot) on the hose end hex swivel nut, and a standard box wrench on the hose end stem hex to hold the hose from twisting.

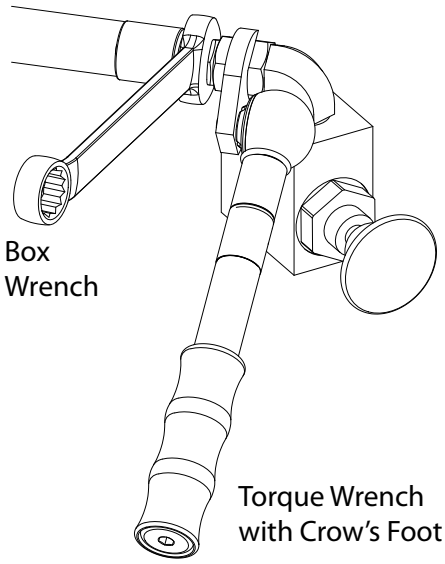

5. Lubricate all O-ring surfaces with suitable hydraulic oil prior to installation in the flange head and O-ring seal grooves. The oil minimizes the possibility of damage to the O-ring when installed.
6. Install any 45° and 90° hydraulic hose ends first, then align direction and tighten. Adjust the swivel nut on the straight hose end before tightening to create the desired flow.

How to torque with a torque wrench

1. This method is applicable for JIC (37°) and FFOR (Flat Face O-Ring) hose ends and fittings, wherever the components are accessible with torque wrench / crow's foot tools.
2. Align the hose end or fitting to the mating component.
3. Install the nut two or three turns by hand to assure proper alignment. Jiggle the hose while tightening to ensure the faces contact fully.
4. Using a properly calibrated torque wrench, tighten the coupling using a smooth, even motion until an indication (audible click) is heard and felt. Do NOT over tighten. For recommended torque values, refer to 2.9 Torque Specifications for Hydraulic Couplings and Hoses.
5. Apply a drop of torque seal to the connection.

How to use torque with the flats-from-wrench-resistance method

1. This method is applicable for JIC (37°) and FFOR (Flat Face O-Ring) hose ends only, wherever the components are inaccessible with torque wrench/ crow's foot tools, or when a properly calibrated torque wrench is not available.
2. Align the hose end or fitting to the mating component.
3. Install the swivel hose end nut hand tight to the fitting to assure proper alignment. Jiggle the hose while tightening to ensure the faces contact fully.
4. Tighten the nut using a box wrench until minor resistance is felt.
5. Note the position of the nut relative to the fitting with a marking device (i.e. paint marker).

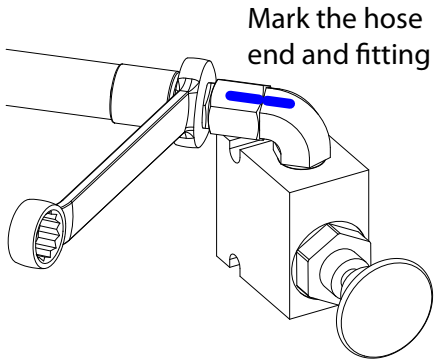

6. Referencing the chart below, use a second box wrench to tighten the nut the appropriate number of flats past the mark. Do NOT over tighten.

FLATS FROM WRENCH RESISTANCE CHART for JIC Hose Ends			
Size		FFWR	
Dash	Frac. (in.)	37° Tube Nut	Swivel Nut
-4	1/4"	2	1.5
-5	5/16"	2	2
-6	3/8"	1.5	1.5
-8	1/2"	1.5	1.25
-10	5/8"	1.5	-
-12	3/4"	1.25	-
-16	1"	1	-
-20	1 1/4"	1	-
-24	1 1/2	1	-
-32	2"	1	-

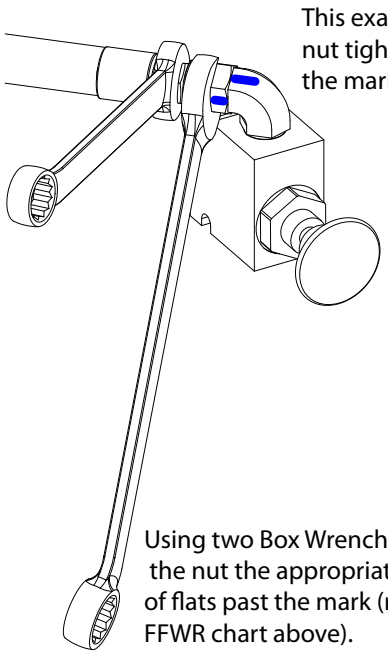

This example shows the nut tightened 1 flat past the mark.

Using two Box Wrenches, tighten the nut the appropriate number of flats past the mark (refer to the FFWR chart above).

7. Apply a drop of torque seal to the connection.

5.6-2 Check the holding valve

1. Raise the platform to an approximate height of 13 ft (4 m).
2. Locate the emergency lowering valve knob on the end of the hydraulic cabinet.
3. While watching the cylinders, pull the knob out, and hold it. If the cylinders do not lower with the knob pulled out, the holding valves are in good working condition. If one or both cylinders do lower, the holding valve on the cylinder that lowered must be replaced.

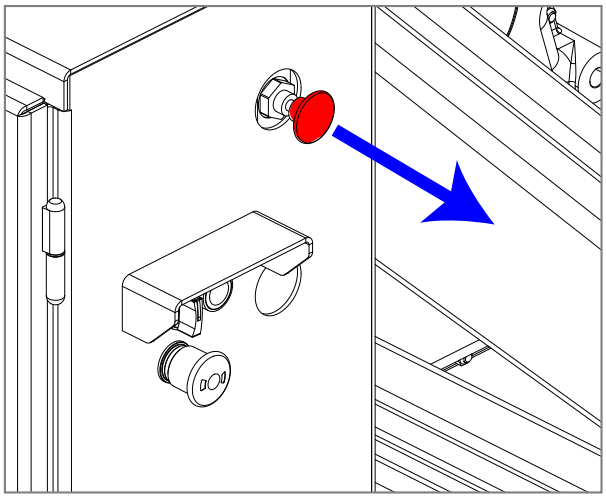

5.6-3 Change the hydraulic oil

NOTE

Samples of hydraulic oil should be drawn from the reservoir and tested annually. These samples should be taken when the oil is warmed through normal operation of the system. The sample should be analyzed by a qualified lubrication specialist to determine if it is suitable for continued use. Oil change intervals depend on the care used in keeping the oil clean, and the operating conditions. Dirt or moisture contamination dictate changing the oil more often. Under normal use and operating conditions, the hydraulic oil should be changed every two years. Refer to Table 1.2 of this manual.

1. Ensure MEWP is on a firm level surface, fully lowered, and outriggers (if equipped) fully retracted.
2. Allow hydraulic oil to warm up.
3. Turn main power disconnect switch to off position.
4. Place suitable container under the hydraulic tank.
5. Remove oil drain plug and allow all hydraulic oil to drain into container.
6. Install oil drain plug with new seal ring and tighten firmly.
7. Refill hydraulic tank with new oil as per specifications. (Refer to Section 2 of this manual)
8. Check for leakage.
9. Clean up any oil that may have spilled during this procedure.
10. Check hydraulic oil level. (The hydraulic oil level should be at or slightly above the top mark on the sight gauge)

NOTE

Refer to your national and local regulations on how to dispose of used filter and oil.

5.6-4 Set the system pressure

Do a check of the pressure

1. Bring the control box down from the platform to the ground so it is accessible while working (refer to 5.5-4).
2. Refer to the machine serial plate on the MEWP for the correct system pressure.
3. Connect a pressure gauge to the quick disconnect fitting located on the left side of the main manifold in the hydraulic cabinet.

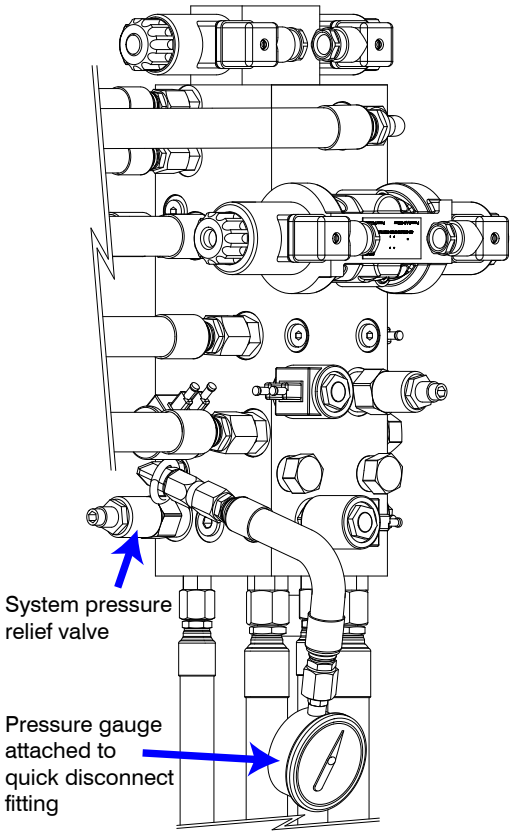

4. With the engine on, use the control box joystick to steer fully left or right to produce pressure. Read the pressure on the gauge.
5. If the pressure shown on the gauge matches that on the serial plate, no further action is needed. However, if it does not match that on the serial plate, proceed to the next step.

Adjust the pressure

6. Continuing from Step 5 above, loosen the jam nut (counterclockwise) on the system pressure relief valve.
7. Still steering fully left or right to create pressure, turn the system relief valve adjustment screw clockwise to raise the pressure, or counterclockwise to lower the pressure, until it matches the value given on the serial plate.

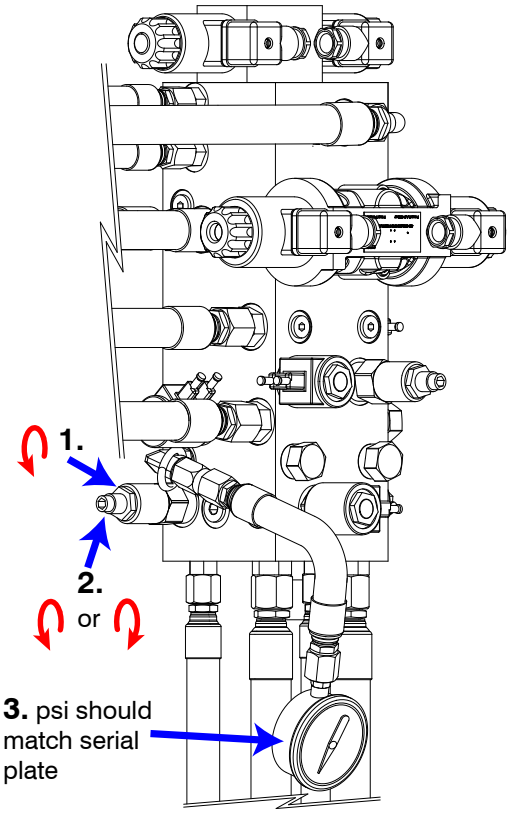

8. Tighten the jam nut and apply a dab of torque seal where the jam nut and adjuster screw meet.
9. Remove the pressure gauge and reconnect the control box to the platform.

5.6-5 Set the lift pressure

Do a check of the pressure

1. Bring the control box down from the platform to the ground so it is accessible while working (refer to 5.5-4).

2. Refer to the MEWP's serial plate for the correct lift pressure for the unit.

3. Locate the lift manifold hose and port on the left side of the main manifold in the hydraulic cabinet. With an oil pan and rag handy, disconnect the hose, capping off or plugging both the hose and the fitting on the manifold.

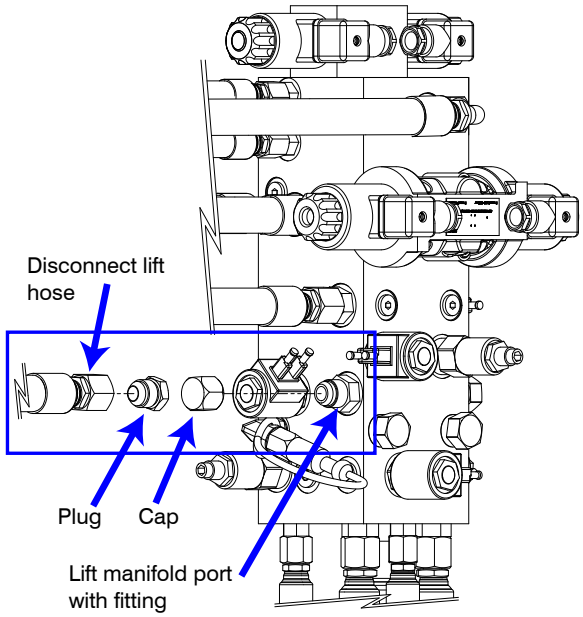

4. Connect a pressure gauge to the quick disconnect fitting located on the left side of the main manifold.

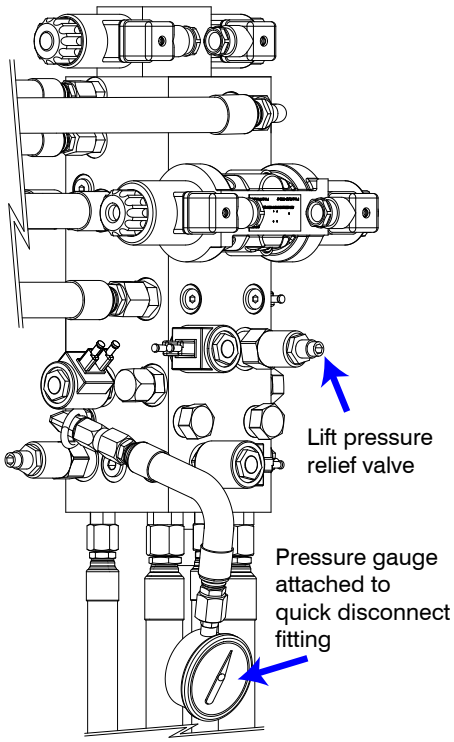

5. To create pressure, with the engine on and the lift/off/lower switch in the lift position, tilt the joystick forward, as though trying to raise the platform. Read the pressure on the gauge.

6. If the pressure shown on the gauge matches that on the serial plate, no further action is needed. However, if it does not match that on the serial plate, proceed to the next step.

Adjust the pressure

7. Loosen the jam nut (turn counterclockwise) on the lift pressure relief valve, located on the front of the main manifold.

8. With the joystick still forward as though attempting to raise the platform, turn the lift relief valve adjustment screw clockwise to raise the pressure, or counterclockwise to lower the pressure, until it matches the value given on the serial plate.

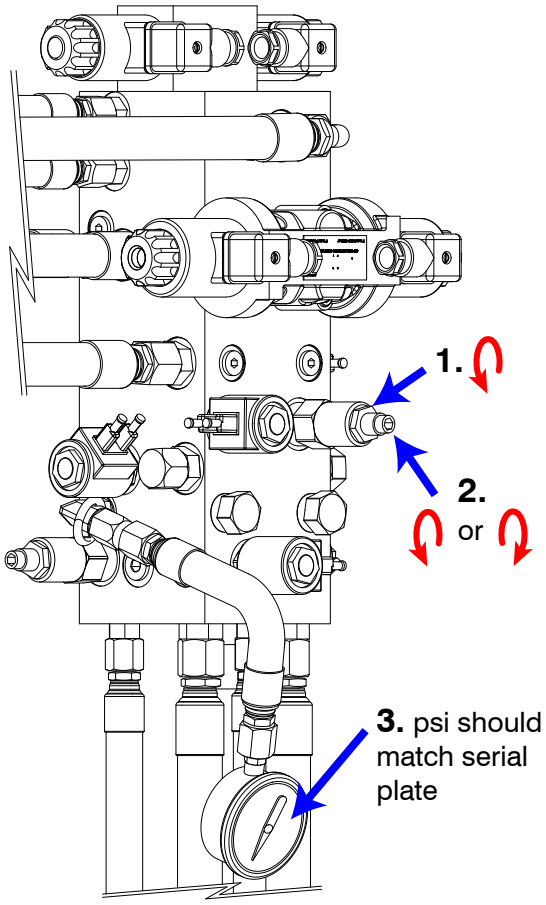

9. Tighten the jam nut and apply a dab of torque seal where the jam nut and adjuster screw meet.

10. Reconnect the lift hose to the main manifold lift port (refer to 5.6-1 Tightening and torque recommendations for hydraulic couplings and hoses).

11. Remove the pressure gauge and reconnect the control box to the platform.

5.7 Outriggers

5.7-1 Outrigger mechanical limit switch wiring diagram

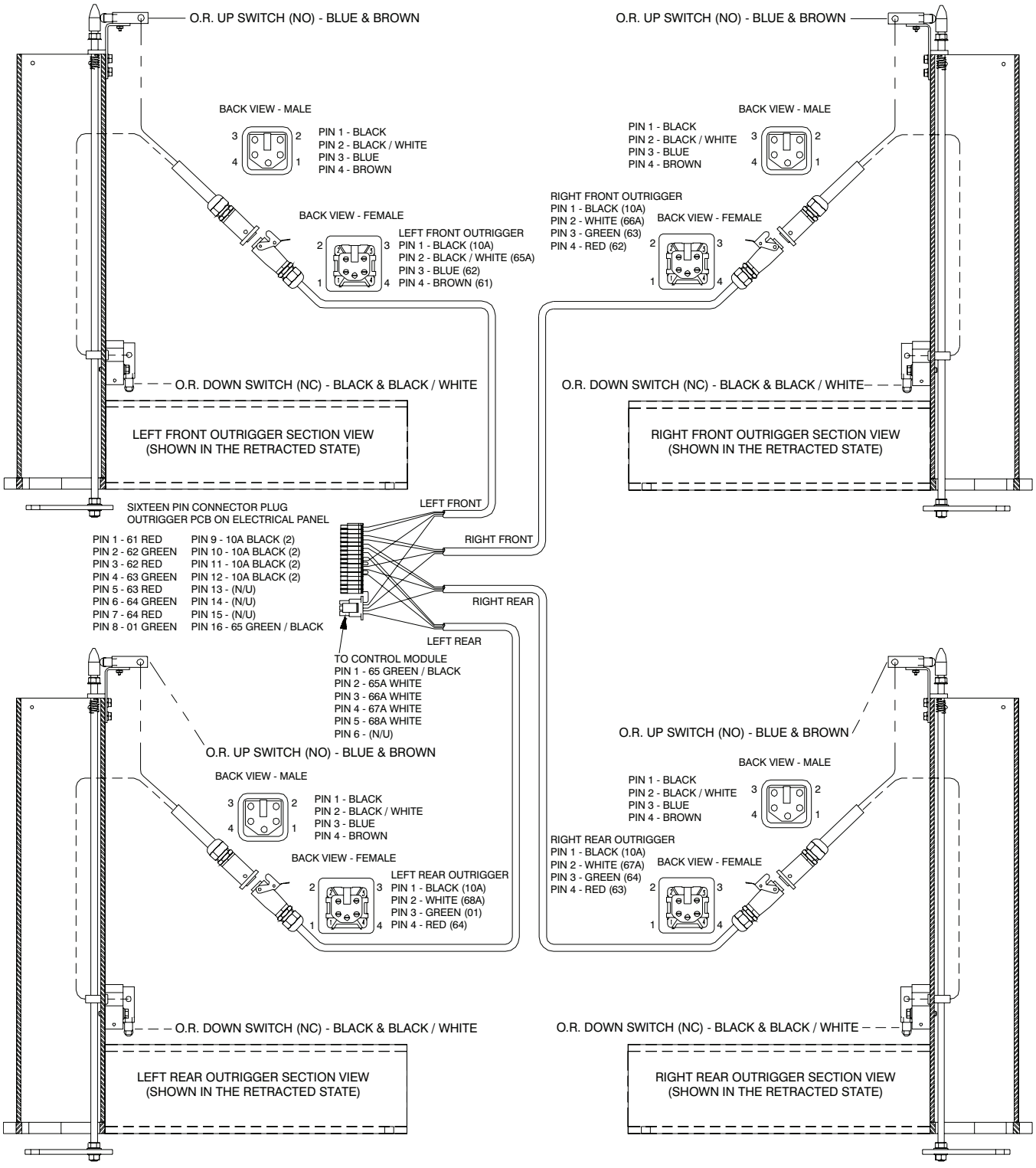

M11449AC

5.7-2 Replace and adjust the outrigger upper limit switch (LS61, LS62, LS63, LS64)

Machine preparation

1. Ensure the MEWP is parked on a firm level surface.
2. Fully retract the outriggers.
3. Turn the main power disconnect switch to the OFF position.
4. Chock or block the wheels to keep the MEWP from rolling forward or backward.

Remove the limit switch

1. Remove the bolts and washers (x4) securing the upper limit switch/hose cover. Set aside the hardware and cover for reinstallation later.
2. Remove the washers, bolts, and nuts (x2) securing the limit switch to the bracket. Set aside for reinstallation later.

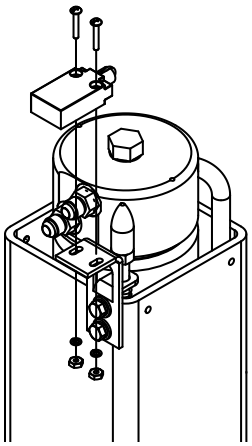

3. Remove the limit switch cable from the split loom tubing, cutting tie wraps and tape as needed to free it.
4. Disconnect the connector, and remove the applicable limit switch wires and ferrules, retaining the connector for reuse later. Discard the old limit switch and cable.

Replace the limit switch

1. Mount the new limit switch (115658) loosely on the bracket, using the hardware removed previously.
2. Starting from the top, place the new limit switch cable in the split loom.
3. Adjust the cable in the split loom as needed, and close the split loom by wrapping electrical tape around it at regular intervals. Tie wrap the split loom to the hoses.
4. Cut off any extra length from the cable, and strip the end to exposed the wires beneath.
5. Strip the ends from each wire and crimp a ferrule to each wire end.
6. Insert the wires into the connector end removed previously (refer to 3.38 Outrigger Wiring Diagram). Reconnect the connector.

Adjust the limit switch

1. With the outriggers retracted, slide the limit switch on the bracket until the plunger is depressed against the actuator rod cap. Apply a small amount of Loctite to the bolts, and tighten the bolts and nuts.

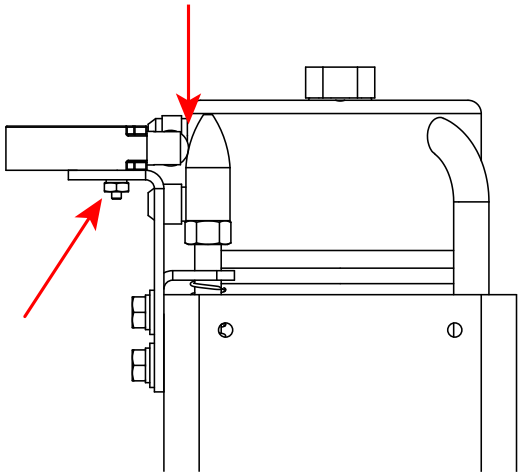

Test the limit switch

1. Turn main power disconnect switch to the ON position, and start the engine.
2. With the outriggers fully retracted, the unit should be drivable. With the outriggers extended more than halfway, the unit should not be drivable.

5.7-3 Replace and adjust the outrigger lower limit switch (LS65, LS66, LS67, LS68)

Machine preparation

1. Ensure the aerial platform is parked on a firm level surface.
2. Fully retract the outriggers.
3. Turn the main power disconnect switch to the OFF position.
4. Chock or block the wheels to keep the MEWP from rolling forward or backward.

Remove the limit switch

1. Remove the bolts and washers (x4) securing the upper limit switch/hose cover. Set aside the hardware and cover for reinstallation later.
2. Remove the screws (x2) securing the lower limit switch cover. Set aside the hardware and cover for reinstallation later.
3. Remove the washers and screws (x2) securing the limit switch to the mount. Set aside for reinstallation later.

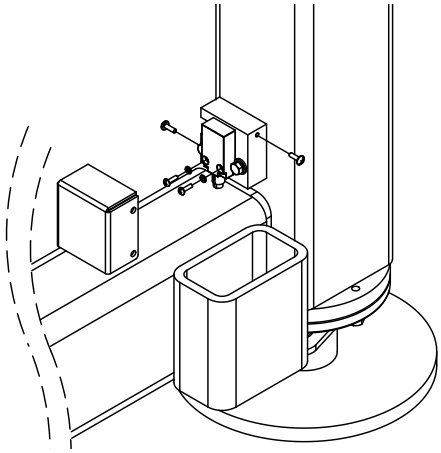

4. Cut the tie wraps and tape around the split loom as needed to expose the limit switch cable.
5. Disconnect the applicable wires from the connector, and cut the ferrules off of the wires on the end of the cable. Retain the connector for reuse later.
6. Remove the cable from the split loom. Gently pull the cable down through the outrigger weldment, and through the rubber grommet. Retain the rubber grommet. Discard the old limit switch and cable

Replace the limit switch

1. Install a new limit switch (115658) to the mounting block using the hardware removed earlier.
2. Feed the new cable through the rubber grommet, and place the grommet in the hole in the outrigger weldment.
3. Feed the cable up through the outrigger weldment, until it comes out the top.
4. Working from top to bottom, adjust the cable in the split loom and close the split loom by wrapping electrical tape around it at regular intervals. Tie wrap the split loom to the hoses.
5. Cut off any extra length from the cable, and strip the end to exposed the wires beneath.
6. Strips the ends from each wire and crimp a ferrule to each wire end.
7. Insert the wires into the connector end removed previously (refer to 3.38 Outrigger Wiring Diagram). Reconnect the connector.

Adjust the limit switch

1. Loosen the bolts securing the mounting block to the outrigger, and slide the block until the limit switch plunger is depressed halfway against the base weldment. Apply a small amount of Loctite to the bolts, and tighten them.

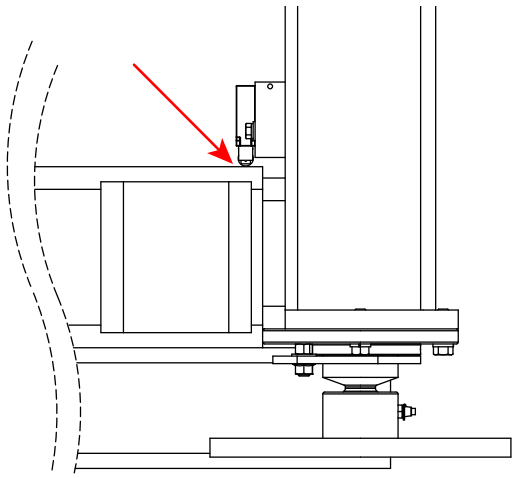

Test the limit switch

1. Turn the main power disconnect switch to the ON position, and start the engine.
2. With the outriggers fully retracted, the unit should be drivable. With the outriggers extended more than halfway, the unit should not be drivable.

5.8 Control Modules Identification and Locations

5.8-1 Identification

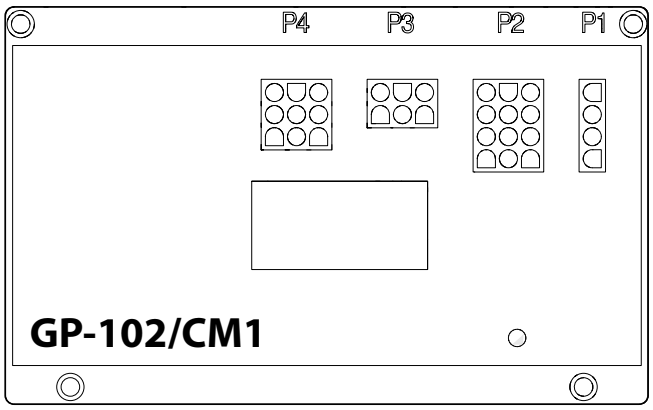

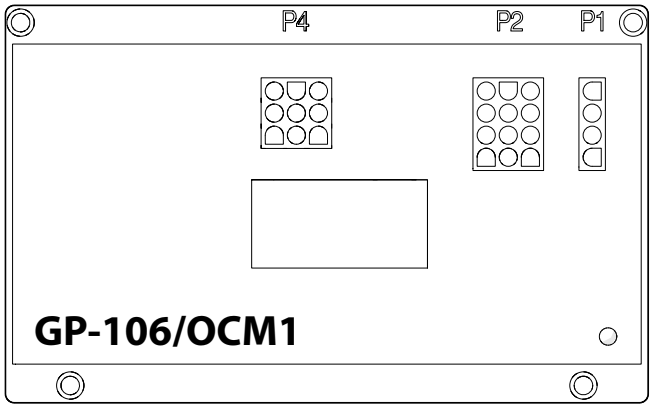

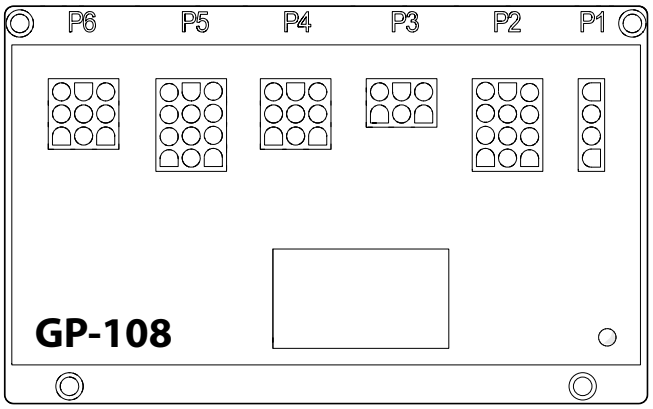

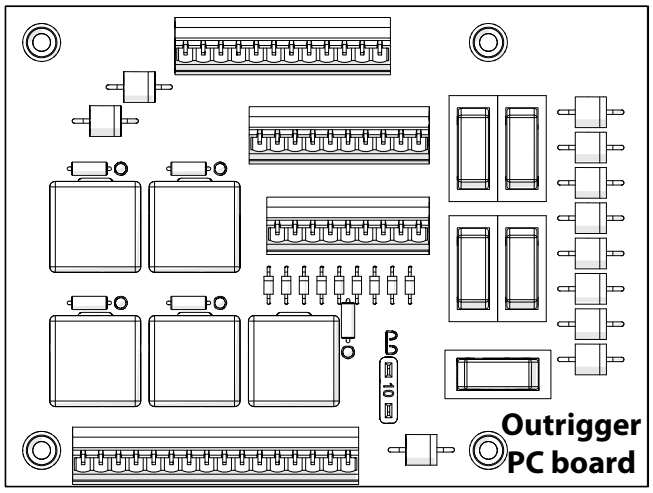

GP-102 Controller: Load sensing

GP-106 Controller: Outriggers

GP-108 Controller: Load sensing and outriggers (replaces GP-102 and GP-106 together)

OCM1 Controller: Outriggers auto-levelling

5.9 EZcal Diagnostic Tool

5.9-1 Hand held EZcal calibration and diagnostic tool key functions

⚠ WARNING

Only trained and authorized personnel shall be permitted to service an MEWP.

⚠ WARNING

Read all instructions closely before attempting each phase of this procedure.

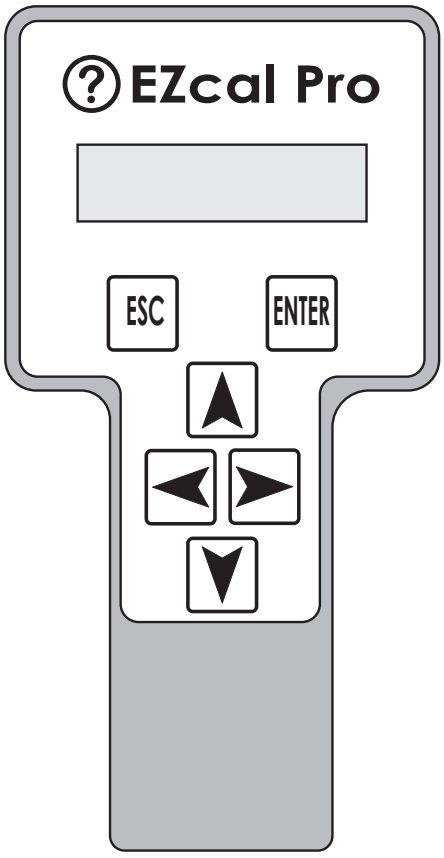

Symbol	Key Functions
	**Help** Displays the current help menu while viewing any controller menu. Release the button to return to the original menu display.
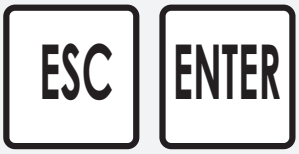	**ESC/ENTER** Use these to move back and forth between menus and submenus and to make a selection.
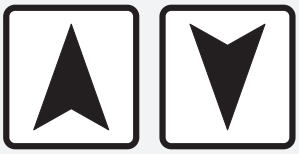	**Up/Down** Adjust the settings values.
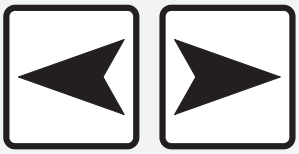	**Left/Right** Select the menus and settings to be adjusted.

5.9-2 Flash the controller

1. Plug the red EZcal Pro device into a USB port on your computer.
2. Open the EZcal device folder on your computer.
3. Copy the new software flash file to this folder. Note the name of the file.
4. When the file is copied, eject the EZcal Pro. Unplug the USB cable.
5. Plug the EZcal Pro into port P1 on the GP controller board.

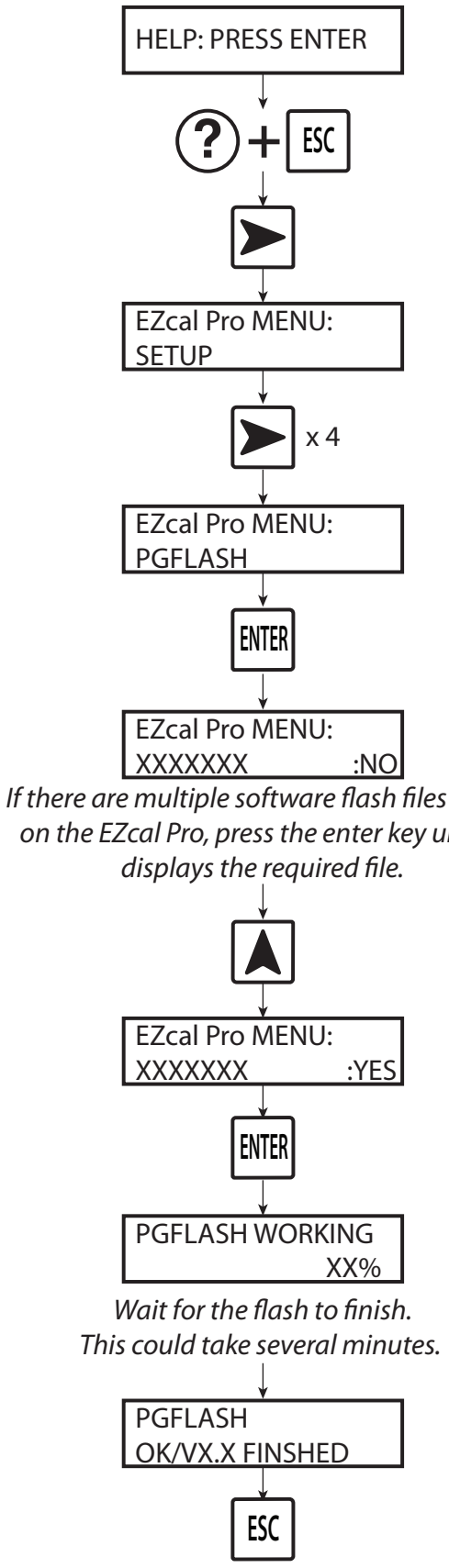

5.9-3 Outrigger codes

Model	Standard	Outrigger Code
SJ8831 RT	All	5
SJ8841 RT	All	5

5.10 Auto-leveling Outrigger PC Board Layout

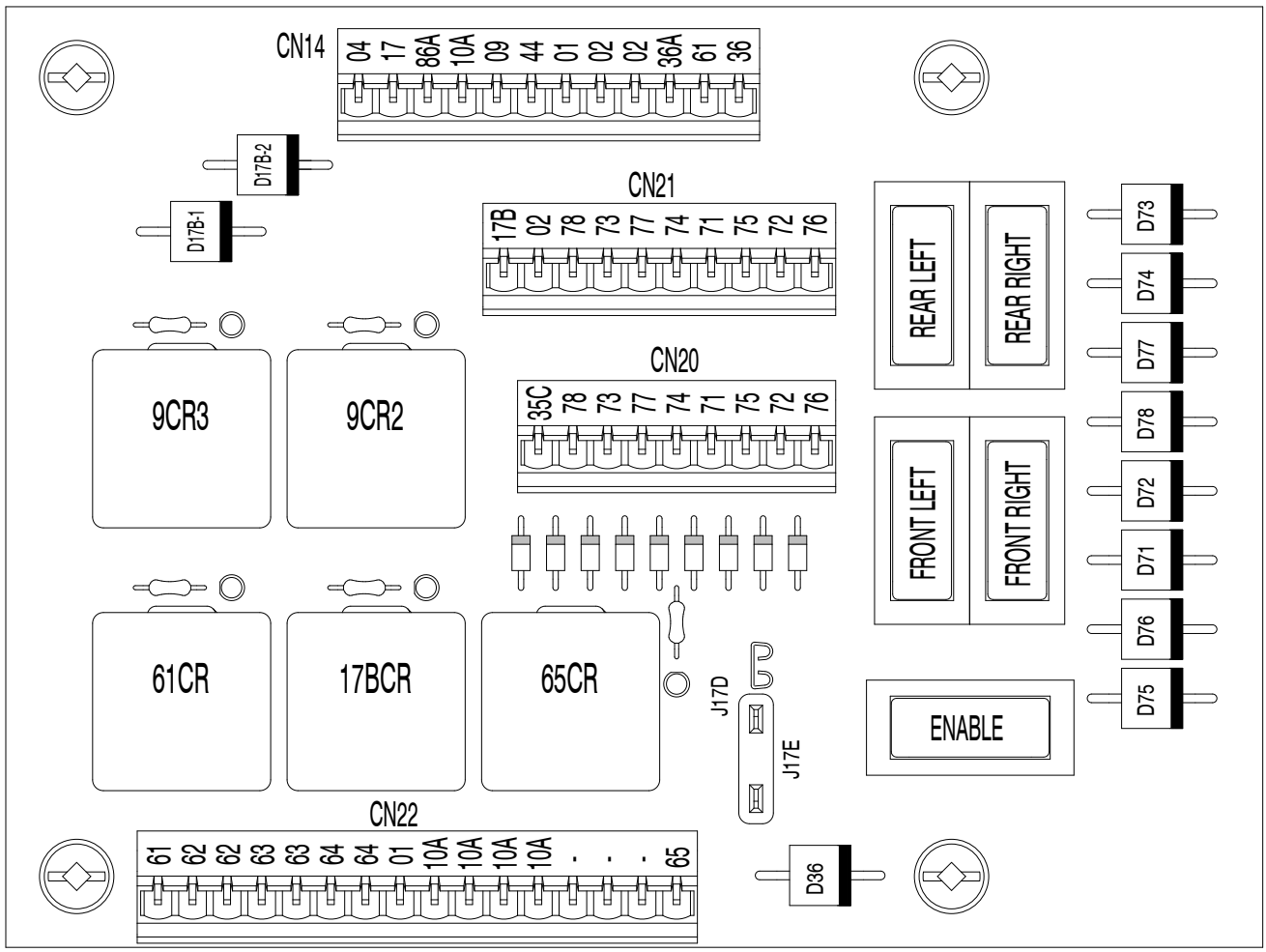

5.11 GP-106 (OCM1) Control Module

5.11-1 Outrigger control module (GP-106/OCM1) instructions

When EZcal hand-held device is connected to the OCM1 control module, a two line displays shows various menus and settings. At any time the top line of the display describes the currently selected menu and the bottom line shows the currently selected item in that menu.

Six buttons on EZcal allow easy navigation through the menus:

- ← and → change the selected item (the bottom line display)
- ENTER enters the selected new menu when available (top line display changes)
- ↑ and ↓ adjusts the selected item when available
- ESC exits the current menu back to the previous menu

TOP LEVEL MENU OPTIONS

HELP	Select this menu to see a description of current OCM1 status
DIAGNOSTICS	Select this menu to see switch input status and logged data
ACCESS LEVEL	Select this menu and enter correct code to enable adjustments and calibrations
ADJUSTMENTS	Select this menu to see and adjust OCM1 settings NOTE: this menu provides for adjustments which might be needed for different work activities
SETUPS	Select this menu to carry out initial set-up of the OCM1 NOTE: this menu provides for set-ups which are needed to configure the OCM1 for a particular vehicle

HELP MENU OPTIONS

(help message)	A message displays current OCM1 status, indicating if everything is OK or if there is an error code (see LED Error Codes - *5.11-2*)

DIAGNOSTIC MENU OPTIONS

SYSTEM	Select this menu to see general OCM1 system information
SWITCHES	Select this menu to see switch input status
OUTPUTS	Select this menu to see OCM1 output status
LOG	Select this menu to see logged information

DIAGNOSTIC / SYSTEM MENU OPTIONS

OUTRIGGERS	Displays various status during the auto-level function
TILT	Displays vehicle tilt in X and Y orientations measured by integral sensor
TILTED	Displays whether vehicle is tilted (YES or NO)
BATTERY	Displays battery supply voltage (on P2-12)

DIAGNOSTIC / SWITCHES MENU OPTIONS

LR/P2-1	High when the left rear outrigger is in contact with the ground
RR/P2-2	High when the right rear outrigger is in contact with the ground
RF/P2-3	High when the right front outrigger is in contact with the ground
LF/P2-4	High when the left front outrigger is in contact with the ground
EXTEND/P2-5	High to activate the auto-level function
RETRACT/P2-6	High to activate the auto-retract function
ELEV/P2-10	High when the scissor stack is stowed (elevated input indicates that the vehicle is stowed).

DIAGNOSTIC / OUTPUTS MENU OPTIONS

LAMP/P2-7	Displays state of outrigger control box light
STABLE/P2-8	Displays state of stable (all legs touching the ground) output
TILT/P2-9	Displays state of tilt
LRe/P4-1	Displays state of left rear outrigger extend valve
RRe/P4-2	Displays state of right rear outrigger extend valve
RFe/P4-3	Displays state of right front outrigger extend valve
LFe/P4-4	Displays state of left front outrigger extend valve
LRr/P4-5	Displays state of left rear outrigger retract valve
RRr/P4-6	Displays state of right rear outrigger retract valve
RFr/P4-7	Displays state of right front outrigger retract valve
LFr/P4-8	Displays state of left front outrigger retract valve
P4-9 MON	Displays the voltage to the outrigger valve (can only be seen when operating in auto-level or retract)

DIAGNOSTIC / LOG MENU OPTIONS

MAX.BATTERY	Displays maximum recorded battery supply voltage
OCM1 version	Displays part number and software version of GP106
EZcal version	Displays software version of EZcal

ACCESS LEVEL MENU OPTIONS

CODE xxxx	ACCESS LEVEL 3 (allows viewing only) ACCESS LEVEL 2 (allows setup on OCM1)

ADJUSTMENTS MENU OPTIONS (factory set - not adjustable)

Xtilt TRIP	Displays the tilt trip point in the X orientation
Ytilt TRIP	Displays the tilt trip point in the Y orientation
TILT ENTRY	Displays the tilt delay time
TILT EXIT	Displays the tilt delay time
Xlevel TRIP	Displays the tilt trip point in the X orientation during the auto-level function
Ylevel TRIP	Displays the tilt trip point in the Y orientation which applies during the auto-level function

MACHINE SETUP MENU OPTIONS (factory set - not adjustable)

DEFAULTS	Allows all adjustments and machine settings to be set to defaults WARNING: all GP106 settings will be changed; use with caution!
CALIBRATE LEVEL	Allows levelling of the integral tilt sensor of the GP106, when the vehicle is positioned on level ground (see Appendix Four)
TILT MODE	Allows configuration of the GP106 tilt output (P2-9): 1 – output turns on to light lamp when tilted 2 – output turns off to cutout functions when tilted 3 – output turns off to cutout functions when tilted AND elevated
TILT FILTER	Displays the filter applied to the tilt measurements during the auto-level function (used to minimize the effect of vehicle vibrations on the tilt measurement)
Xlevel TARGET	Displays the tilt in the X orientation at which the auto-level function will complete.
Ylevel TARGET	Displays the tilt in the Y orientation at which the auto-level function will complete.
tilt SLACK	Displays the amount of vehicle tilt exceeding the Xtilt TARGET and/or Ytilt TARGET in which the auto-level function will not attempt to level EXAMPLE: Xtilt TARGET=0.3°, Ytilt TARGET=0.7°, tilt SLACK=0.5° If machine is tilted to 1.0° in the X and Y orientations, the auto-level function will attempt to level the X orientation (0.3+0.5<1.0) but will not attempt to level the Y orientation (0.7+0.5>1.0) RANGE: 0.0° to 1.0°, default 0.3°

5.11-2 Auto-leveling outrigger setting and error codes

Read the codes

Error codes are indicated with the flashing LED on the control module. When there is a fault, the LED on the outrigger control module flashes to indicate the error code number.

Identify the error code by counting the flashes as follows:

1. The first digit is indicated by half-second flashes followed by half-second pauses.
2. A 2.5-second pause follows.
3. The second digit is then indicated by half-second flashes followed by half-second pauses.
4. A 5-second pause follows, then the cycle repeats.

The LED continuously displays codes until the fault is cleared, the outrigger control module is reset and no longer detects the fault, or idle timeout becomes active.

Since the outrigger control module only reports one error, only one code can be read from the LED per instance. If the error is cleared and another is present, it will then be presented.

LED ERROR CODES

EVERYTHING OK	ON
VEHICLE TILTED	1/1
OUTRIGGERS CANNOT BE MOVED!	1/2
OUTRIGGERS NOT HOME	2/2
NOT FULLY LEVEL	2/1
RELEASE OUTRIGGER DEMAND!	5/5
CHECK OUTRIGGER SUPPLY (P4-9)	5/2
CANNOT LEVEL : BAD TILT SENSOR	7/1
OUTRIGGERS MANUALLY CONTROLLED!	6/6
TESTING HWFS	7/8
B+ SUPPLY TOO LOW	5/1
STARTUP!	7/7
FAULT: BAD SLAVE MICRO	7/5
FAULT: BAD TILT SENSOR	7/1
FAULT: BAD HWFS	7/2
FAULT: P2-5 FAULTY	8/1
FAULT: P2-6 FAULTY	8/2
FAULT: P2-8 STUCK ON	8/3
FAULT: P2-8 ALWAYS ON	8/4
FAULT: P2-8 ALWAYS OFF	8/5
FAULT: HWFS STALLED!	7/6

60402AC

5.11-3 Auto-leveling outrigger error code breakdown

LED Flash Code	Meaning	Action
5/5	RELEASE OUTRIGGER DEMAND!	Check inputs on P2 pins 5 & 6 - the “auto-level” or “auto-retract” input is active at power-on or when it is not allowed to carry out the function.
1/2	OUTRIGGERS CANNOT BE MOVED!	Check input on P2 pin 10 – “auto-level” or “auto-retract” has been requested but the platform is elevated.
2/1	NOT FULLY LEVEL	The outrigger legs are all down (touching the ground) but the platform is not fully level.
2/2	OUTRIGGERS NOT HOME	The outrigger legs are not all down (touching the ground) and also are not all home (fully retracted).
5/1	B+ SUPPLY TOO LOW	Check that the battery voltage is not too low.
5/2	CHECK OUTRIGGER SUPPLY (P4-9)	Check that the battery voltage is not too low.
1/1	VEHICLE TILTED	These is not a true fault – move the vehicle to level ground!
7/8	TESTING HWFS	These are not true faults unless they do not clear – the start-up tests should only occur for a short time
7/7	STARTUP!	These are not true faults unless they do not clear – the start-up tests should only occur for a short time
6/6	OUTRIGGERS MANUALLY CONTROLLED!	This is not a true fault – the outriggers are being manually operated (one or more outrigger legs on P4 pins 1-8 is high, when the outrigger control module is not active
7/1	CANNOT LEVEL (BAD TILT SENSOR)	These are internal faults. If the fault persists after the power has been reset, the outrigger control module may need to be replaced.
7/1	FAULT: BAD TILT SENSOR	
7/2	FAULT: BAD HWFS	
7/5	FAULT: BAD SLAVE MICRO	
7/6	FAULT: HWFS STALLED!	
8/1	FAULT: P2-5 FAULTY	
8/2	FAULT: P2-6 FAULTY	
8/3	FAULT: P2-8 STUCK ON	
8/4	FAULT: P2-8 ALWAYS ON	
8/5	FAULT: P2-8 ALWAYS OFF	

5.11-4 Set up the GP-106 outrigger controller

IMPORTANT

Each phase must be completed before the next phase can be carried out. All phases must be completed before the aerial platform can be operated. Always follow the instructions of the Calibration instrument.

1. Ensure aerial platform is parked on a firm and level surface.
2. Elevate the scissors high enough to lay a level across the base tubes. Ensure there is no debris on the base and the level sits flat. Do not elevate aerial platform higher than the high speed/tilt override limit switch.
3. Manually operate the outriggers and level the machine in 4 places: left side, right side, front and rear. All 4 outriggers must be firmly placed and all 4 tires are off the ground.
4. Double check that the aerial platform is level at all 4 points.
5. Connect the EZcal tool to the P1 connector on the CONTROL MODULE.
6. The display shows Help: Press Enter.
   By using Left – Right buttons, select the **Access Level (3)** from the menu and press **ENTER**.
7. The display shows **Access Level: Code (0000)**.
   By using the Up – Down buttons, enter the **Access Level Code** (1 ➔1 ➔ 2 ➔ 2) followed by pressing the **ENTER**.
8. The display shows **Access Level 2**.
   By using Left – Right buttons, select the Setups from the menu and press the **ENTER** button.
9. The display shows Setups: **Change Defaults**.
   Select the **Change Defaults** from the menu and press **ENTER**.
10. The display shows **Defaults, 0 = Custom**.
    By using Up – Down buttons, select the **Defaults: Code Setting** for your Model (for default code, refer to *5.9-3*) from the menu and press the **ENTER** followed by **ESCAPE**.
11. The display shows **Setups Change Defaults**.
    By using Left – Right buttons, select the **Calibrate Level** from the menu and press **ENTER**.
12. The display shows **Calibrate Level: Yes: Enter, No: ESC**.
    Select the **YES** from the menu by pressing **ENTER**.
13. The display shows **Calibrate Level: Tilt 0.0' , 0.0**'.
    Select the **ESCAPE** from the menu once.
14. The display shows **Setups Calibrate Level**.
    Select the **ESCAPE** from the menu once again.
15. The Calibration procedure is complete, unplug and remove the EZ-Cal.
16. Close the hydraulic/electric cabinet.

5.11-5 GP-106 Outrigger controller pin reference table

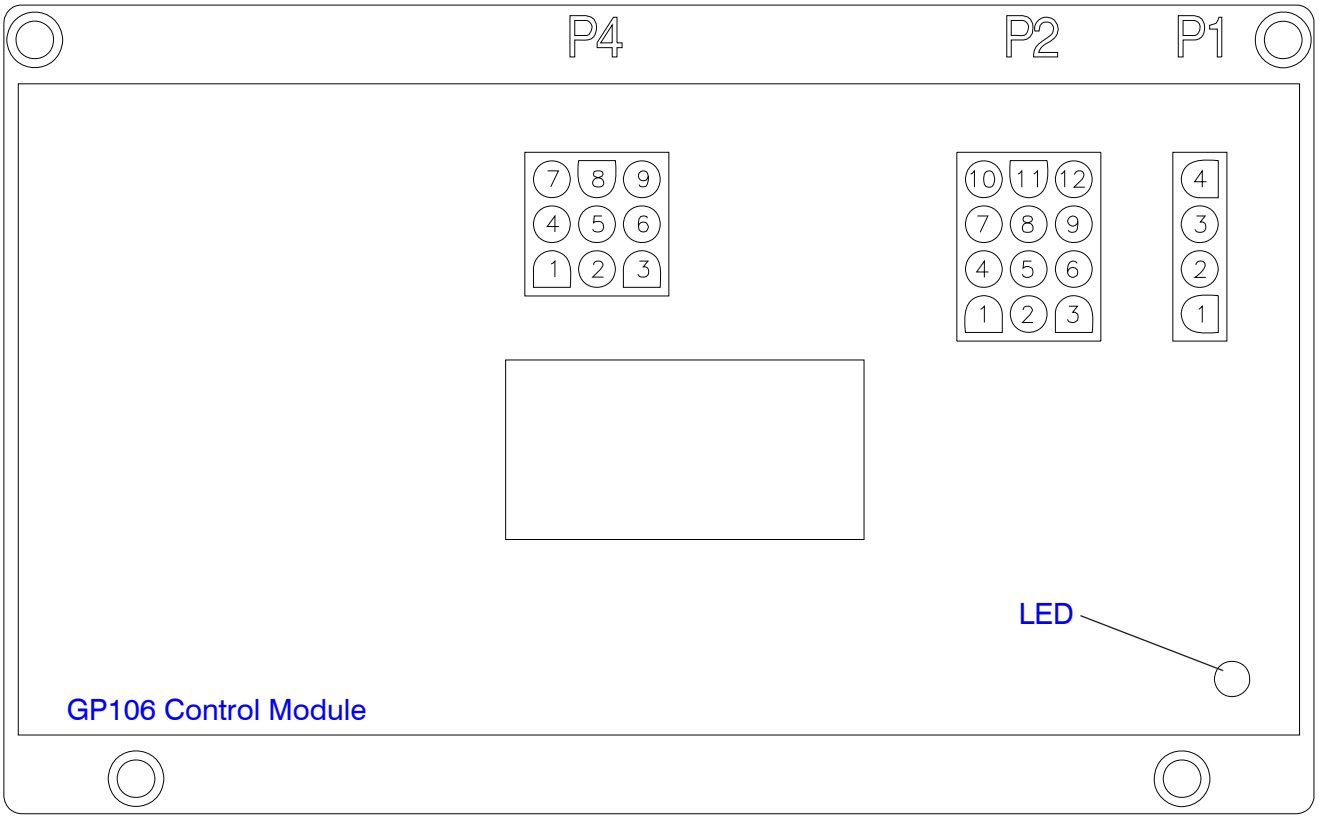

PLUG	PIN #	WIRE # AND COLOUR	WIRE FUNCTION
P1	The Calibration Connection		
P2	1	68A White	Input indicating that the LEFT REAR outrigger is in contact with the ground
P2	2	67A Red/White	Input indicating that the RIGHT REAR outrigger is in contact with the ground
P2	3	66A Blue/White	Input indicating that the RIGHT FRONT outrigger is in contact with the ground
P2	4	65A Green/White	Input indicating that the LEFT FRONT outrigger is in contact with the ground
P2	5	70 Green/Black	Input for AUTO-LEVEL function to extend the outriggers to level the machine
P2	6	79 Green	Input for AUTO-RETRACT function to retract the outriggers until the switch is released
P2	7	70A Red/White	Outrigger Light on Outrigger Control Box
P2	8	65 Green/Black	STABLE output to indicate that all outriggers are in contact with the ground
P2	9	28 Green	TILT output to indicate that the machine is level (ANSI/CSA only)
P2	10	44 Green	Tilt override / High Drive Cutout
P2	11	02 White	Negative Input
P2	12	10A Black	Main Power Input
P4	1	78 Black/White	Output used to extend the LEFT REAR outrigger
P4	2	77 Blue/Black	Output used to extend the RIGHT REAR outrigger
P4	3	76 Red/Black	Output used to extend the RIGHT FRONT outrigger
P4	4	75 Orange/Black	Output used to extend the LEFT FRONT outrigger
P4	5	74 Black	Output used to retract the LEFT REAR outrigger
P4	6	73 Blue	Output used to retract the RIGHT REAR outrigger
P4	7	72 Red	Output used to retract the RIGHT FRONT outrigger
P4	8	71 Orange	Output used to retract the LEFT FRONT outrigger
P4	9	35C White/Black	Power input for outriggers

60401AC

5.12 GP-108 Control Module

5.12-1 Set up the GP-108 outrigger controller

Preparation

1. Turn the main power disconnect switch to the on position.
2. Insert the key.
3. Pull out the e-stop button on the base control console.
4. Pull out the e-stop button on the platform control console.
5. Make sure the MEWP is on a firm, level surface.
6. Retract the extension decks and outriggers, if equipped.
7. Empty the platform.
8. Connect an EZ-Cal tool to the P1 connector on the GP-108 controller. Follow the flowchart to set up the controller.
9. Turn the base/off/platform keyswitch to the base position and hold it there.

NOTE

Hold the key switch in the base position during the entire setup process.

If you let go of the key switch in the middle of the process, the controller resets and you have to start again from the beginning.

Hold the key switch in the base position during the setup process.

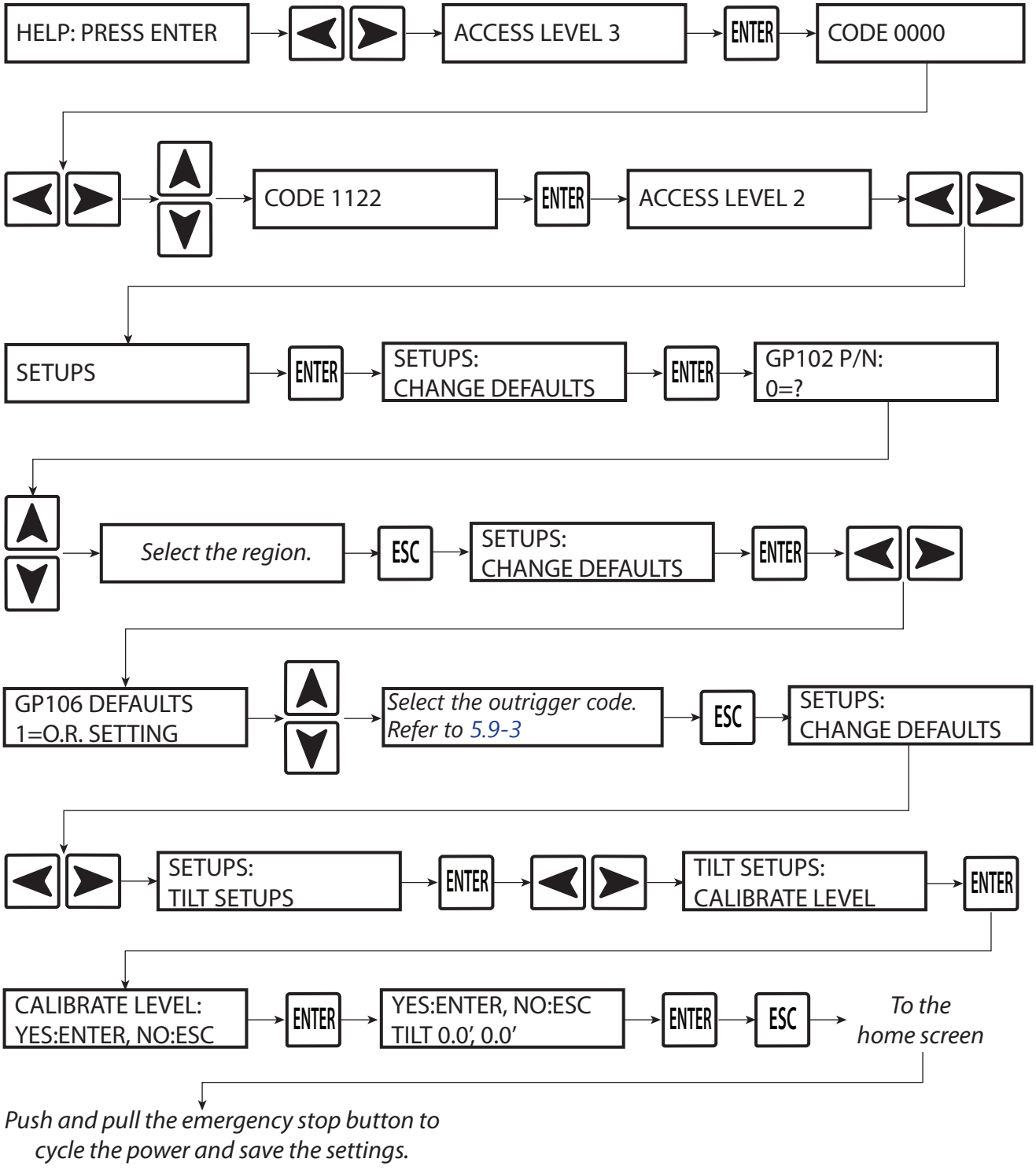

5.12-2 GP-108 Outrigger controller pin reference table

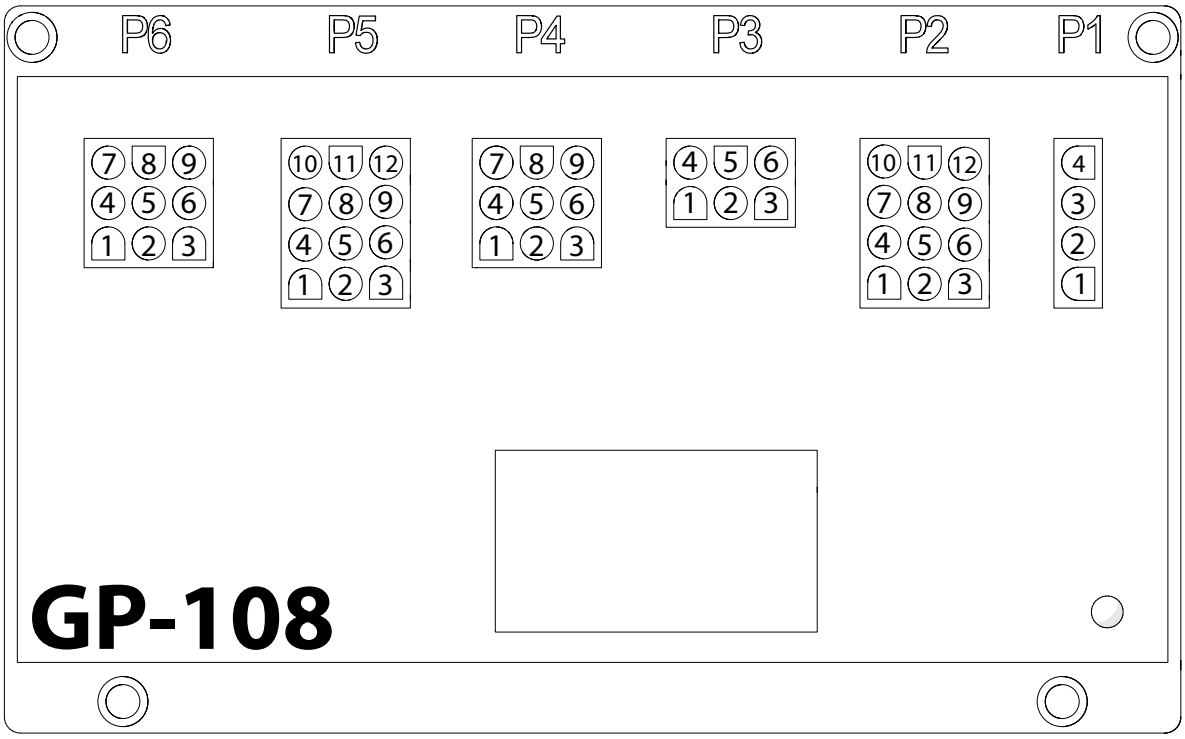

PLUG	PIN	WIRE # & COLOUR	WIRE FUNCTION
Calibration Connection (RS232)			
P1	1	B+	Not connected –used for hand held calibration device connection
P1	2	Rx	
P1	3	Tx	
P1	4	GND (-)	
Inputs			
P2	1	Not Used	Not Used
P2	2	10E Blue/White	12V Input from S10 PLTF/Idle/Base Key Switch for Base selected *required for any movement from Base*
P2	3	14 Black	12V Input from S3 Lift/Off/Drive switch for Raise requested
P2	4	13 Orange	12V Input from S3 Lift/Off/Drive switch for Lower requested
P2	5	10 Red	12V Input IF BOTH Emergency Stops are energized *required for any movement from Platform*
P2	6	Not Used	Not Used
P2	7	16 White/Black	12V Input thru S3 Lift/Off/Drive switch from Joystick Forward drive requested
P2	8	15 Blue	12V Input thru S3 Lift/Off/Drive switch from Joystick Reverse drive requested
P2	9	Not Used	Not Used
P2	10	35B Red/Black	12V Input From LS1 High Speed Limit Switch To Verify ON/OFF Limits
P2	11	02 White	0V GND (-) Negative Reference From Base Terminal Strip
P2	12	10A Blue/Black	12V Main Power Input thru Main Power Relay 10BCR From Base Terminal Strip

PLUG	PIN	WIRE # & COLOUR	WIRE FUNCTION
Outputs			
P3	1	22 Black	12V Output to Flashing light Harness 22CR
P3	2	29 Green	Through flashing light harness
P3	3	60 Black/White	Through flashing light harness
P3	4	28 Green/Black	12V Output To 28ACR1 & 28ACR2 Pump Dump Enable Relay's and 28CR Down Enable Relay
P3	5	02 White	Through flashing light harness
P3	6	28E Green/White	12V Output To 28ECR1, 28ECR2 and 28ECR3 Pump Dumps Aux. Enable Relay's
Analogs			
P4	1	Not Used	Not Used
P4	2	60A Green	0-5V Proportional Input from PT1 Pressure Transducer Analog Output signal
P4	3	28B Green	0-5V Proportional Input from AT1 Angle Transducer Analog Output signal
P4	4	Not Used	Not Used
P4	5	Not Used	Not Used
P4	6	910 Black	Output supply 12V (B+) for AT1 Angle Transducer
P4	7	900 White	0V GND (-) Negative Reference for PT1 Pressure Transducer
P4	8	902 White	0V GND (-) Negative Reference for AT1 Angle Transducer
P4	9	910A Black	Output supply 12V (B+) for PT1 Pressure Transducer
Inputs			
P5	1	68A White	12V Input from LS68 Left Rear Outrigger Down limit switch
P5	2	67A Red/White	12V Input from LS67 Right Rear Outrigger Down limit switch
P5	3	66A Blue/White	12V Input from LS66 Right Front Outrigger Down limit switch
P5	4	65A Green/White	12V Input from LS65 Left Front Outrigger Down limit switch
P5	5	70 Green/Black	12V Input from S24 Outrigger Auto Level request signal
P5	6	79 Green	12V Input from S24 Outrigger Auto All-Up request signal
P5	7	70A Red/White	12V Output for Outrigger Light OL1
P5	8	65 Green/Black	12V Input from LS61, LS62, LS63 & LS64 Outriggers limit switch Up signal ** (all switch contacts must be closed to produce in series signal)
P5	9	Not Used	Not Used
P5	10	44 Red	12V Input from 35CR Elevation Tilt Override/High Speed Cutout Relay
P5	11	02 White	GND B- 0V Reference Input from Base Terminal Strip
P5	12	10A Black	12V B+ Input thru Main Power Relay 10BCR From Base Terminal Strip
Output			
P6	1	78 Black/White	12V Output for Outrigger Left Rear Down signal to 4H-78 Solenoid
P6	2	77 Blue/Black	12V Output for Outrigger Right Rear Down signal to 4H-77 Solenoid
P6	3	76 Red/Black	12V Output for Outrigger Right Front Down signal to 4H-76 Solenoid
P6	4	75 Orange/Black	12V Output for Outrigger Left Front Down signal to 4H-75 Solenoid
P6	5	74 Black	12V Output for Outrigger Left Rear Up signal to 4H-74 Solenoid
P6	6	73 Blue	12V Output for Outrigger Right Rear Up signal to 4H-73 Solenoid
P6	7	72 Red	12V Output for Outrigger Right Front Up signal to 4H-72 Solenoid
P6	8	71 Orange	12V Output for Outrigger Left Front Up signal to 4H-71 Solenoid
P6	9	35C White/Black	12V Output for Outrigger Enable signal from Enable switch S9A or Relay 9CR3

5.12-3 GP-108 LED error codes

Code	Description
ON	EVERYTHING OK
ON	GROUND MODE ACTIVE!
	STARTUP!
	VEHICLE TILTED
	NOT FULLY LEVEL
	OUTRIGGERS NOT HOME
1/1	VEHICLE TILTED AND NOT LOWERED
1/1	HEIGHT NOT CALIBRATED
1/2	VEHICLE OVERLOADED
1/3	ARMGUARD ACTIVE!
1/4	TOO HIGH - DRIVE PREVENTED
1/5	TOO HIGH - LIFT UP PREVENTED
2/2	RELEASE OUTRIGGER DEMAND!
3/2	FAULT: ENERGIZED VALVE - CHECK WIRING!
3/2	FAULT: VALVE FEEDBACK HIGH!
3/4	FAULT: BAD INTERNAL SAFETY SWITCH!
4/1	GP102 P4-1 OR P5-1 SHORT TO 0V?
4/2	GP102 P3-4 SHORT TO SUPPLY!
4/2	FAULT: BAD INTERNAL 5V!
4/2	FAULT: BAD INTERNAL SLAVE!
4/3	GP102 P3-4 SHORT TO 0V?
4/4	FAULT: BATTERY VOLTAGE TOO LOW!
4/4	FAULT: BATTERY VOLTAGE TOO HIGH!
4/4	GP106 P2-8 SHORT TO SUPPLY!
4/4	GP106 P2-x SHORT TO SUPPLY?
4/4	GP106 P4-x SHORT TO SUPPLY?
4/4	GP102 P3-4 SHORT TO SUPPLY?
4/4	GP102 P3-6 SHORT TO SUPPLY?
4/4	B+ SUPPLY TOO LOW
4/5	GP106 P4-x SHORT TO 0V?
4/5	GP106 P2-8 SHORT TO 0V?
4/5	GP106 P2-x SHORT TO 0V?
4/5	GP102 P3-6 SHORT TO 0V?
4/6	GP106 P2-x FAILURE?
4/6	GP102 P3-6 FAILURE?
5/2	WAITING FOR B+ ON P4-9
5/2	WAITING FOR B+ ON P2-12
5/4	UP/DOWN SELECT INPUTS ACTIVE TOGETHER
5/5	WAITING FOR NEUTRAL: LIFT/DRIVE
5/5	FAULT: OUTPUTS!
5/5	FAULT: GP106 OUTPUTS!
5/5	FAULT: GP102 OUTPUTS!
5/6	DRIVE/LIFT INPUTS FAULTY!
6/1	FAULT: CHECK HEIGHT1 SENSOR
6/1	FAULT: CHECK HEIGHT2 SENSOR
6/1	FAULT: CHECK HEIGHT SENSORS
6/2	FAULT: CHECK PRESSURE SENSOR
6/4	FAULT: CHECK ELEVATION SWITCH
7/8	TESTING HWFS
F/F	IDLE TIMEOUT ACTIVE!
F/F	CHECK GP106 CONNECTIONS!
F/F	CHECK GP102 CONNECTIONS!
F/F	FACTORY OVERRIDE

60665AB

SKYJACK™

www.skyjack.com