IMPORTANT

Verify if your machine is hydraulically proportional or motor controlled.

Motor controller machines can be identified by the MC label located on the side of the machine or on the platform control box.



For motor controller-specific diagrams, schematics and troubleshooting information, see Section 6 - Appendix A.



SERVICE MANUAL (ANSI/CSA)

DC ELECTRIC SCISSORS

MODELS SJIII 3215 SJIII 3219

157927AP October 2025

SKYJACK™

This manual is for MEWPs with serial numbers:

SJIII 3215	10 000 631 to 10 999 999
SJIII 3219	22 022 793 to 22 999 999

Please refer to the website www.skyjack.com for older Serial Numbers.

SERVICE AND MAINTENANCE

Table of Contents

Section 1 - Scheduled Maintenance
Table of Contents

Section 2 - Maintenance Tables and Diagrams
Table of Contents

Section 3 - System Component Identification and Schematics
Table of Contents

Section 4 - Troubleshooting Information
Table of Contents

Section 5 - Procedures
Table of Contents

Section 6 - Motor Controller
Table of Contents

The Safety Alert Symbol identifies important safety messages on aerial platforms, safety signs in manuals or elsewhere. When you see this symbol, be alert to the possibility of personal injury or death. Follow the instructions in the safety message.



This Safety Alert Symbol means attention!

Become alert! Your safety is involved.

DANGER

DANGER indicates an imminently hazardous situation which, if not avoided, will result in death or serious injury.

WARNING

WARNING indicates a potentially hazardous situation which, if not avoided, could result in death or serious injury.

CAUTION

CAUTION indicates a potentially hazardous situation which, if not avoided, may result in minor or moderate injury. It may also be used to alert against unsafe practices.

IMPORTANT

IMPORTANT indicates a procedure) essential for safe operation and which, if not followed, may result in a malfunction or damage to the aerial platform.

Section 1 - Scheduled Maintenance

Operator's Responsibility for Maintenance

Aerial Platform and Mobile Elevating Work Platform Definition 7
Purpose of Equipment 7
Use of Equipment 7
Manuals 7
Service Policy and Warranty 7
Operator Safety Reminders, Warnings and Precautions 7
Maintenance and Inspection Schedule 8
Owner's Annual Inspection Record 8
Replacement Parts 8
Maintenance and Service Safety Tips 8
Hydraulic System & Component Maintenance and Repair 9
Maintenance Hints 10
Railing Maintenance and Repair 10

Service and Maintenance

About this Section 11
Service Bulletins 11
Maintenance and Inspection 11
Maintenance Instructions 11

Tables

Table 1.1 Owner's Annual Inspection Record 12
Table 1.2 Pre-Delivery/Maintenance Inspection Checklist 13

Scheduled Maintenance

1.1 Scheduled Maintenance Inspections 14
1.2 Function Tests 24

SKYJACK is continuously improving and expanding product features on its equipment, therefore, specifications and dimensions are subject to change without notice.

Aerial Platform and Mobile Elevating Work Platform Definition
A mobile device that has a positionable platform supported from ground level by a structure.

Purpose of Equipment
The SKYJACK SJIII DC Electric series aerial platforms are designed to transport and raise personnel, tools and materials to overhead work areas.

Use of Equipment
The aerial platform is a highly maneuverable, mobile work station. Work platform elevation and elevated driving must only be done on a firm level surface.

Manuals

Operating
The operating manual is considered a fundamental part of the aerial platform. It is a very important way to communicate necessary safety information to users and operators. A complete and legible copy of this manual must be kept in the provided weather-resistant storage compartment on the aerial platform at all times.

Service & Maintenance
The purpose of this is to provide the customer with the servicing and maintenance procedures essential for the promotion of proper machine operation for its intended purpose.

All information in this manual should be read and understood before any attempt is made to service the machine. The updated copy of the manuals are found on the company's website: www.skyjack.com.

Service Policy and Warranty
SKYJACK warrants each new SJIII Series work platform to be free of defective parts and workmanship for the first 24 months. Any defective part will be replaced or repaired by your local SKYJACK dealer at no charge for parts or labor. Contact the SKYJACK Service Department for warranty statement extensions or exclusions.

Operator Safety Reminders, Warnings and Precautions
Operator safety is SKYJACK's priority. The operator should comply with all applicable safety-related reminders, warnings and precautions found in the Operating Manual. They should be read and understood completely before operating the aerial platform.

Maintenance and Inspection Schedule

The actual operating environment of the work platform governs the use of the maintenance schedule. The inspection points covered in Table 1.2 Pre-Delivery/ Maintenance Inspection Checklist. Maintenance and Inspection Checklist, indicates the areas of the aerial platform to be maintained or inspected and at what intervals the maintenance and inspections are to be performed.

Owner's Annual Inspection Record

It is the responsibility of the owner to arrange quarterly and annual inspections of the aerial platform. Table 1.1. Owner's Annual Inspection Record is to be used for recording the date of the inspection, owner's name, and the person responsible for the inspection of the work platform.

Replacement Parts

Use only original replacement parts. Parts such as batteries, wheels, railings, etc. with weight and dimensions different from original parts will affect stability of the aerial platform and must not be used without manufacturer's consent.

All replacement tires must be of the same size and load rating as originally supplied tires; to maintain safety and stability of aerial platform.

Consult SKYJACK's Service Department for optional tires specifications and installation.

WARNING

Any unit that is damaged or not operating properly must be immediately tagged and removed from service until proper repairs are completed.

Maintenance and Service Safety Tips

Maintenance and repair should only be performed by personnel who are trained and qualified to service this aerial platform.

All maintenance and service procedures should be performed in a well lighted and well ventilated area.

Anyone operating or servicing this aerial platform must read and completely understand all operating instructions and safety hazards in this manual and operating manual.

All tools, supports and lifting equipment to be used must be of proper rated load and in good working order before any service work begins. Work area should be kept clean and free of debris to avoid contaminating components while servicing.

All service personnel must be familiar with employer and governmental regulations that apply to servicing this type of equipment.

Keep sparks and flames away from all flammable or combustible materials.

Properly dispose of all waste material such as lubricants, rags, and old parts according to the relative law provisions obtaining in the country.

Before attempting any repair work, turn Battery Disconnect Switch to the "OFF" position.

Preventive maintenance is the easiest and least expensive type of maintenance.

Hydraulic System & Component Maintenance and Repair

The following points should be kept in mind when working on the hydraulic system or any component:

WARNING

Escaping fluid from a hydraulic pressure leak can damage your eyes, penetrate the skin and cause serious injury. Use proper personal protection at all times.

1. Any structure has limits of strength and durability. To prevent failure of structural parts of hydraulic components, relief valves which limit pressure to safe operating values are included in the hydraulic circuits.

2. Tolerance of working parts in the hydraulic system is very close. Even small amounts of dirt or foreign materials in the system can cause wear or damage to components, as well as general faulty operation of the hydraulic system. Every precaution must be taken to assure absolute cleanliness of the hydraulic oil.

3. Whenever there is a hydraulic system failure which gives reason to believe that there are metal particles or foreign materials in the system, drain and flush the entire system and replace the filter cartridges. A complete change of oil must be made under these circumstances.

4. Whenever the hydraulic system is drained, check the magnets in the hydraulic reservoir for metal particles. If metal particles are present, flush the entire system and add a new change of oil. The presence of metal particles also may indicate the possibility of imminent component failure. A very small amount of fine particles is normal.

5. All containers and funnels used in handling hydraulic oil must be absolutely clean. Use a funnel when necessary for filling the hydraulic oil reservoir, and fill the reservoir only through the filter opening. The use of cloth to strain the oil should be avoided to prevent lint from getting into the system.

6. When removing any hydraulic component, be sure to cap and tag all hydraulic lines involved. Also, plug the ports of the removed components.

NOTE

Samples of hydraulic oil should be drawn from the reservoir and tested annually. These samples should be taken when the oil is warmed through normal operation of the system. The sample should be analyzed by a qualified lubrication specialist to determine if it is suitable for continued use. Oil change intervals will depend on the care used in keeping the oil clean, and the operating conditions. Dirt and/or moisture cotamination will dictate that the oil should be changed more often. Under normal use and operating conditions, the hydraulic oil should be changed every two years. Refer to Table 1.2 Pre-Delivery/Maintenance Inspection Checklist of this manual.

7. All hydraulic components must be dis-assembled in spotlessly clean surroundings. During disassembly, pay particular attention to the identification of parts to assure proper reassembly. Clean all metal parts in a clean mineral oil solvent. Be sure to thoroughly clean all internal passages. After the parts have been dried thoroughly, lay them on a clean, lint-free surface for inspection.

8. Replace all O-rings and seals when overhauling any component. Lubricate all parts with clean hydraulic oil before reassembly. Use small amounts of petroleum jelly to hold O-rings in place during assembly.

9. Be sure to replace any lost hydraulic oil when completing the installation of the repaired component, and bleed any air from the system when required.

10. All hydraulic connections must be kept tight. A loose connection in a pressure line will permit the oil to leak out or air to be drawn into the system. Air in the system can cause damage to the components and noisy or erratic system operation.

Maintenance Hints

Three simple maintenance procedures have the greatest effect on the hydraulic system performance, efficiency and life. Yet, the very simplicity of them may be the reason they are so often overlooked. What are they? Simply these:

1. Change filters annually. The filters will need to be changed more often depending on the operating conditions. Dirty, dusty, high moisture environments may cause the hydraulic system to be contaminated more quickly.
2. Maintain a sufficient quantity of clean hydraulic oil of the proper type and viscosity in the hydraulic reservoir.
3. Keep all connections tight.

Railing Maintenance and Repair

Skyjack MEWPs have been designed to ensure compliance with the relevant design standards applicable for that particular unit at the time of manufacture. As such, any repairs made to the guardrail or basket structure need to ensure this compliance is not compromised and must return the structure to its original condition.

Any damage must be repaired by returning the railing assembly to its undamaged state. Damage includes, but is not limited to, the items listed below:

- bent/deformed guardrail sections
- cracks or broken welds in railing sections
- damaged pin connections
- missing pins or broken pin lanyards
- missing railing hardware
- loose or missing parts
- additional holes in guardrail sections other than those approved by Skyjack

Additionally, the guardrails must be properly positioned and secured, and the entry gate/chain must be in good working order.

The strength of the guardrail system, and therefore its ability to provide fall protection for platform occupants, depends upon the design being secure and undamaged.

Skyjack railings are designed for modular replacement, and Skyjack recommends replacement of any damaged railing section. Skyjack-approved replacement parts will meet this requirement.

About this Section

This section contains the maintenance and inspection schedule that is to be performed.

References are made to the procedures in Section 5 that outline detailed step-by-step instructions for checks and replacements.

Service Bulletins

Before performing any scheduled maintenance inspection procedure, refer to service bulletins found in our web site: www.skyjackinc.com for updates related to service and maintenance of this aerial platform.

Maintenance and Inspection

Death or injury can result if the aerial platform is not kept in good working order. Inspection and maintenance should be performed by competent personnel who are trained and qualified on mantenance of this aerial platform.

WARNING

Failure to perform each procedure as presented and scheduled may cause death, serious injury or substantial damage.

NOTE

Preventive maintenance is the easiest and least expensive type of maintenance.

- Unless otherwise specified, perform each maintenance procedure with the aerial platform in the following configuration:
  - Aerial platform parked on a flat and level surface
  - Disconnect the battery by turning the main power disconnect switch to the “OFF” position.
- Repair any damaged or malfunction components before operating aerial platform.
- Keep records on all inspections.

Maintenance Instructions

This manual consists of four schedules to be done for maintaining on an aerial platform. Inspection schedule frequency is shown below:

Inspection Schedule

PDI / Frequent	B
Annual	B + C
Additional	*

B - Perform PDI prior to each delivery, or Frequent Inspection every 3 months or 150 hours.
C - Perform Scheduled Maintenance Inspections every year.
***** - Perform at time sensitive maintenance intervals.

- Make copies of the maintenance and inspection checklist to be used for each inspection.
- Check the schedule on the checklist for the type of inspection to be performed.
- Place a check in the appropriate box after each inspection procedure is completed.
- Use the maintenance and inspection checklist and step-by-step procedures in Section 1 to perform these inspections.
- If any inspection receives a fail, tag and remove the aerial platform from service.
- If any aerial platform component(s) has been repaired, an inspection must be performed again before removing the tag. Place a check in the repair column.

Legend

P = Pass
F = Fail
R = Repaired
N/A = Not applicable

Table 1.1 Owner's Annual Inspection Record

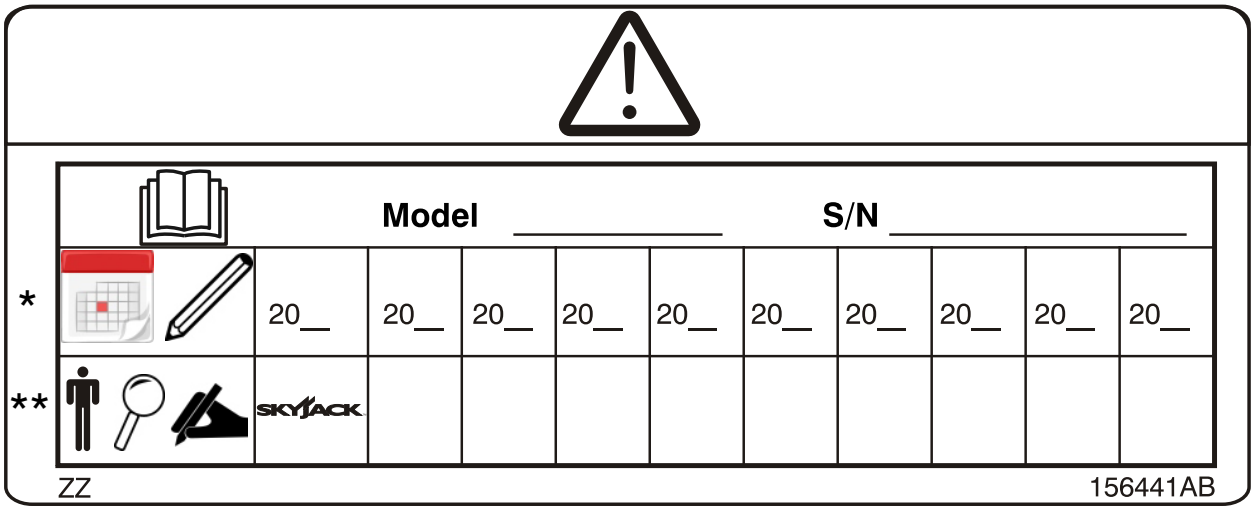

This decal is located on the scissor assembly. It must be completed after an annual inspection has been completed. Do not use the aerial platform if an inspection has not been recorded in the last 13 months.

	Pictorial	Description
*		**Inspection Date**
**		Inspector Signature

Pre-Delivery/Maintenance Inspection Checklist

Vertical Mast, SJIII, & Rough Terrain

Serial Number: Product Owner:

Model:

Hourmeter Reading: Product User:

Date/Time:

Use this form for Pre-Delivery Inspections (PDI) prior to each rental, lease or sale, or as a guide for all Frequent Inspections and Annual Inspections. Refer to the applicable Operating and Service Manuals for inspection details (eg. Visual Inspection and Function Tests, Torque Specs., Engine Oil, Chain Inspection Intervals, etc.).

Inspection Type Schedule	
❑ PDI	B
❑ Frequent	B
❑ Annual	B + C

B - Perform PDI prior to each delivery or Frequent Inspections every 3 months or 150 hrs. For further details refer to Service & Operating Manuals.

C - Perform Scheduled Maintenance Inspections every year. For further details refer to Service & Operating Manuals.

P - Pass
F - Fail
R - Repaired
N/A - Not Applicable

Check the appropriate box as each item is inspected. If an item is found to be not acceptable, please describe the issue in the comments box provided.

Items for Inspection		P	F	R	N/A
Refer to skyjack.com for the latest service bulletins.	B				
Ensure Annual Inspection has been completed within the last 13 months.	B				
Manuals & Required Documents. In storage box, in good condition & legible.	B				
Labels. In place, secure & legible.	B				
Limit Switches. Secured & no obstructions or damage.	B				
Main Power Disconnect Switch. Cables secure & in working order.	B				
Battery/ Hydraulic Tray. Latch is secure, & no missing parts.	B				
Battery Charger. Secure, & no damage.	B				
Battery. No damage, tight connections, fluid levels correct. Clean terminals and cable ends.	B				
Manifolds. Tight fittings and hoses & no damage or leaks. Tight wire connections & no missing parts.	B, C				
Motor Controller. Secure & no damage. No loose connections.	B				
Electrical Panel / Control Module. Secure & no damage. Tight wire connections and fasteners.	B				
Hydraulic Tank. Filler cap secure & no damage or leaks.	B				
Hydraulic Oil. Level at, or slightly above top mark.	B, C				
Hydraulic Components & Hoses. Secure & no damage or leaks.	B				
Base Weldment. No deformation or cracks.	B				
Base Control Switches. Switches to neutral position & no damage.	B				
Free-wheeling Valve Knob. Secure & no damage or missing parts.	B				
Ladder. Secure & no damage.	B				
AC Power to Platform (Plug Cord Receptacle). No obstructions, dirt or damage.	B				
Pothole Protection Device. Check both sides for obstructions, dirt, or damage.	B				
Brakes. Secure & no damage or leaks.	B, C				
Steer Cylinder Assembly. Secure & no damage, leaks or missing parts.	B				
Wheel/Tire Assembly. Check all tires for damage, wear & proper alignment. Lug nuts torqued as recommended.	B				
Axles. Secure & no missing parts. Tight fittings and hoses & no leaks.	B				
Tie Rod. End studs locked & no damage.	B				
Tilt (Load) Sensor. Secure & no damage.	B				
Emergency Lowering Access Rod. Secure & no damage.	B				
Engine Tray. No damage or missing parts.	B				

Items for Inspection		P	F	R	N/A
Engine Control Console. Secure & no damage.	B				
Engine Air Filter. No damage or missing parts.	B, C				
Engine Oil. Level between "L" and "H". Ensure oil change interval has not been exceeded.	B				
Radiator. Secure & no damage or missing parts. Check coolant level.	B, C				
Muffler and Exhaust. Secure & no damage.	B				
Fuel Shut-off Valve. No damage or missing parts.	B				
Fuel Tank. Filler cap is secure & no damage.	B				
Fuel Leaks. Tight fittings and hoses & no damage or leaks.	B				
Propane Tank. Straps fastened to brackets & coupler tight.	B				
Propane Tank Leaks. No leaks (refer to service manual for procedure).	B				
Scissor Assembly. No deformation/damage. Pins secure. Cables & wires routed with no damage.	B				
Mast Assembly. No damage or deformation. Lubricated	B, C				
Mast Chains. No damage or missing parts.	B, C				
Control Cables. No damage or missing parts.	B, C				
Rollers. Secure & no obstructions, dirt, or damage/wear.	B, C				
Wear Pads. No damage/wear or missing parts. Fasteners tightened.	B, C				
Scissor Bumpers. Secure & no damage.	B				
Sliders. Secure & no obstructions, dirt, or damage/wear	B				
Maintenance Support. Secure & no damage.	B				
Lift Cylinder(s). No damage or missing parts. Tight fittings and hoses & no leaks.	B				
Scissor Pins. No damage/wear or missing parts.	B				
Platform Control Console. Switches to neutral position & secure. No missing parts.	B				
Raillings and Gate/Chain. Secure & no damage or missing parts.	B				
Lanyard Attachment Anchorage. Attachment rings secure & no damage.	B				
AC Outlet. No obstructions, dirt, or damage.	B				
Powered Extension Control Console. Switches to neutral position & secure. No missing parts.	B				
Extension Deck. Secure & no damage or missing parts. Check fluid level (if applicable).	B				
Outriggers. No damage or missing parts.	B				
Scissor Guards. Secure & no damage.	B				
Greasing Points. No obstructions, dirt, or damage.	B, C				
Function Tests (Refer to your corresponding Serial #'s Operating Manual for information on running these tests.)		❑ PASS ❑ FAIL			

Comments:

The undersigned confirms that all areas listed have been inspected, and any and all discrepancies have been brought to the attention of the owner. Furthermore, the undersigned confirms that all discrepancies have been corrected prior to using this machine.

Owner: _____ / _____ / _____
Print Name Signature Date (DD/MM/YY)

User: _____ / _____ / _____
Print Name Signature Date (DD/MM/YY)

Note: Visit skyjack.com for a printable copy of this form.

167830AC

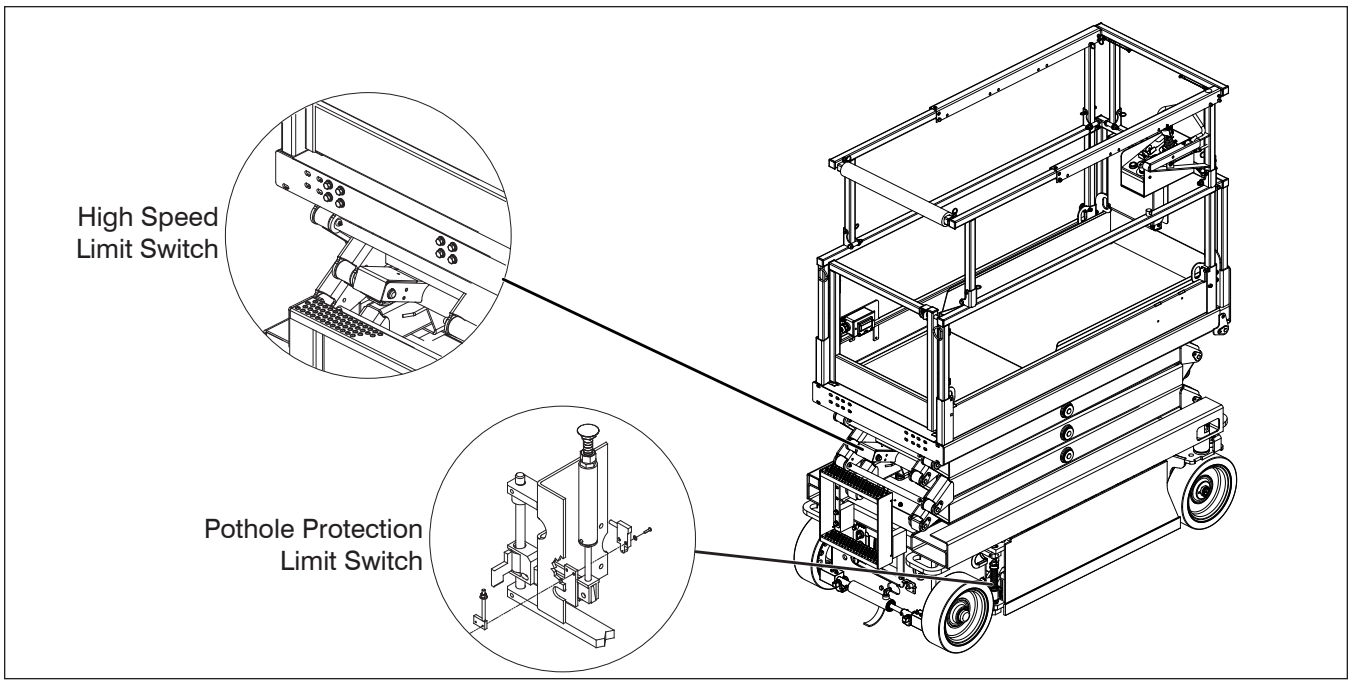

1.1 Scheduled Maintenance Inspections

Begin the scheduled maintenance inspections by checking each item in sequence for the conditions listed in this section.

WARNING

To avoid injury, do not operate an aerial platform until all malfunctions have been corrected.

WARNING

To avoid possible injury, ensure aerial platform power is off during your visual and daily maintenance inspections.

Electrical

Maintaining the electrical components is essential to good performance and service life of the aerial platform.

Inspect the following areas for chafed, corroded and loose wires:

- base to platform cables and wiring harness
- battery tray wiring harnesses
- hydraulic/electrical wiring harnesses

Hydraulic

Maintaining the hydraulic components is essential to good performance and service life of the aerial platform.

Perform a visual inspection around the following areas:

- hoses and fittings
- all hydraulic cylinders
- all hydraulic manifolds
- the underside of the base
- ground area under the aerial platform

1.1-1 Manuals (B)

Ensure a copy of operating manual and other important documents are enclosed in manual storage box.

- Check to be sure manual storage box is present and in good condition.
- Ensure manuals are legible and in good condition.
- Always return manuals to the manual storage box after use.

1.1-2 Labels (B)

Refer to the labels section in the operating manual and determine that all labels are in place and are legible.

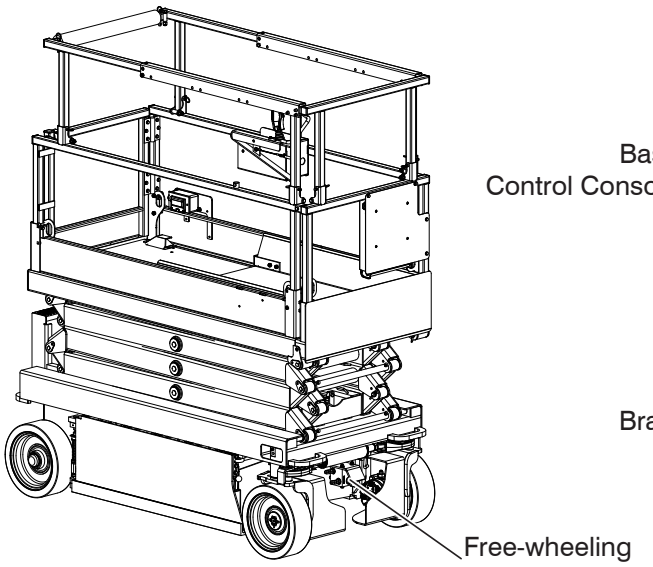

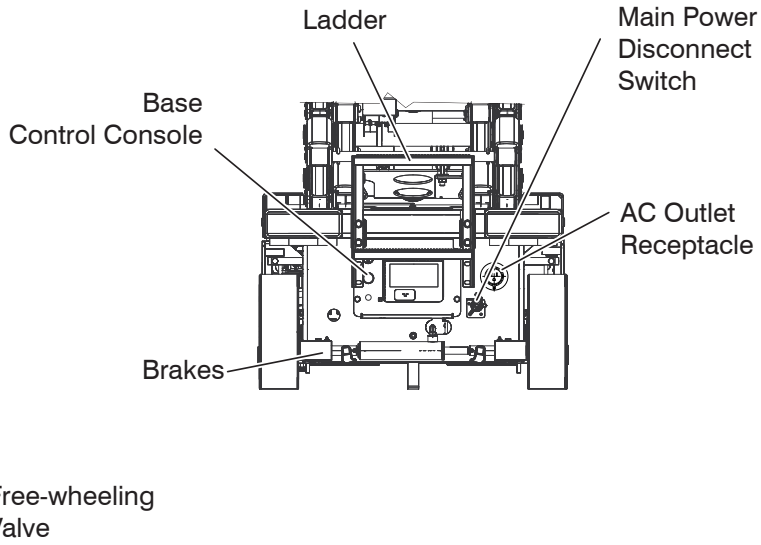

1.1-3 Limit Switches (B)

Detecting limit switch malfunction is essential to safe aerial platform operation. Ensure limit switches are properly secured and movement is not obstructed.

Visually inspect all limit switch located inside the scissor arms and the outrigger assemblies for the following:

- broken or missing actuator arm
- missing fasteners
- loose wiring

1.1-4 Entrance Side

- **Main Power Disconnect Switch (B)**
  - Turn main power disconnect switch to "◯" off position.
  - Ensure all cables are secure and switch is in proper working condition.
- **Base Control Switches (B)**
  - Ensure there are no signs of visible damage and all switches are in their neutral positions.
- **Free-wheeling Valve Knob (B)**
  (Compacts - Front Side)
  - Ensure there are no loose or missing parts and there is no visible damage.
- **Brakes (B, C)**
  - Ensure there are no loose or missing parts and there is no visible damage.
  - Ensure brake override is not engaged.
- **AC Outlet Receptacle (B)**
  - Ensure receptacle is free from dirt and obstructions.
- **Ladder (B)**
  - Ensure there are no loose or missing parts and there is no visible damage.

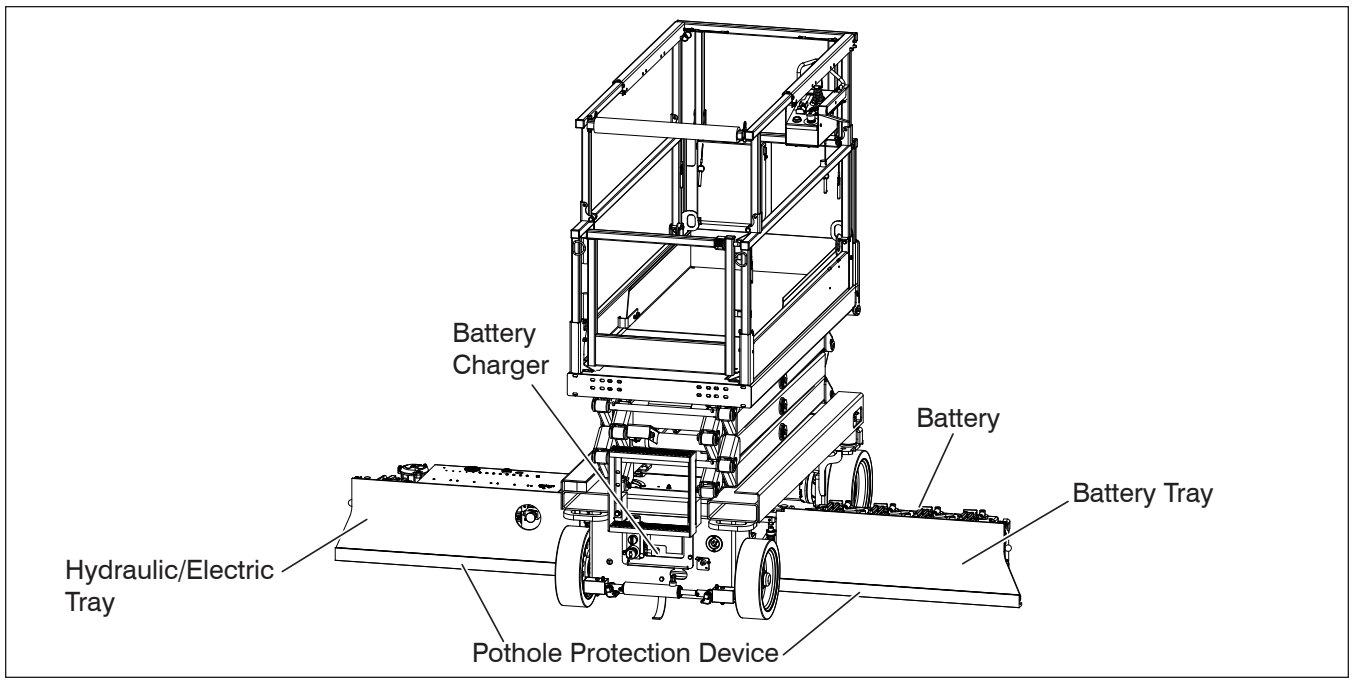

1.1-5 Battery Tray Side

- **Pothole Protection Device (B)**
  - Ensure mechanisms have no sign of visible damage and are free from dirt and obstructions.
- **Battery Tray (B)**
  - Ensure tray latch is secure and in proper working order.
- **Battery Charger (B, C)**
  (Compacts - Entrance Side)
  - Ensure charger is secure and shows no visible damage.
- **Battery (B)**
  Proper battery condition is essential to good performance and operational safety. Improper fluid levels or damaged cables and connections can result in component damage and hazardous conditions.

WARNING

Explosion hazard. Keep flames and sparks away. Do not smoke near batteries.



WARNING

Battery acid is extremely corrosive - Wear proper eye and facial protection as well as appropriate protective clothing. If contact occurs, immediately flush with cold water and seek medical attention.

1. Check battery case for damage.
2. **B - Frequent Inspection**
   Clean battery terminals and cable ends thoroughly with a terminal cleaning tool or wire brush.
3. Ensure all battery connections are tight.
4. If applicable, check battery fluid level.
   B - Frequent Inspection
   If plates are not covered by at least 1/2 in. (13 mm) of solution, add distilled or demineralized water.
5. **B - Frequent Inspection**
   Replace battery if damaged or incapable of holding a lasting charge.

WARNING

Use original or manufacturer-approved parts and components for the aerial platform.

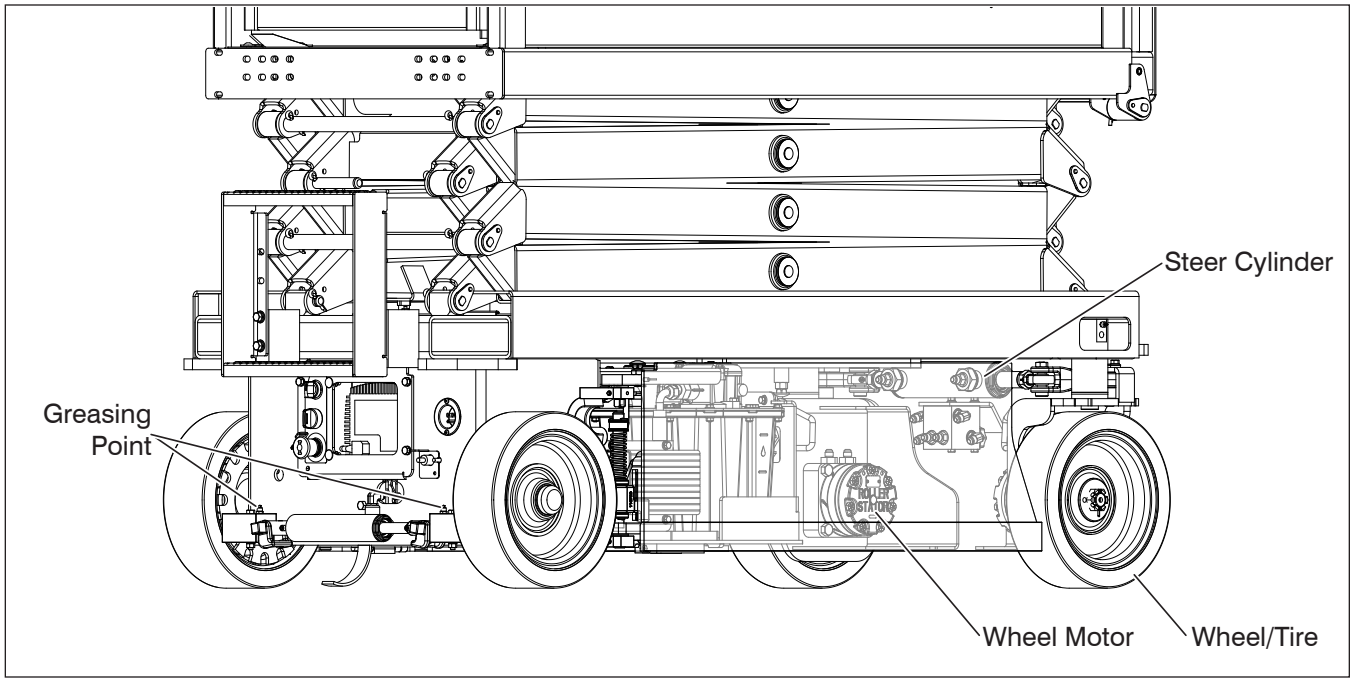

- **Steer Cylinder Assembly (B)**
  - Ensure steer cylinder assembly is properly secured and there are no loose or missing parts.
- **Greasing Points (B, C)**
  - Ensure greasing points have no sign of visible damage and are free from dirt and obstructions.

B - Frequent Inspection

- Locate grease fittings and pump grease as needed.

- **Wheel/Tire Assembly (B)**

A small amount of wear is permitted. But if any of the wear or damage meets the criteria mentioned below, the tire should be replaced.

WARNING

Do not use tires other than the tires that Skyjack specifies for this MEWP. Do not mix different types of tires or use tires that are not in good condition. Only replace the tires with the same types that are approved by Skyjack. The use of other tires can make the MEWP less stable. If you do not obey, there is a risk of death or serious injury.

The tire treads have been removed from the illustration for clarity.

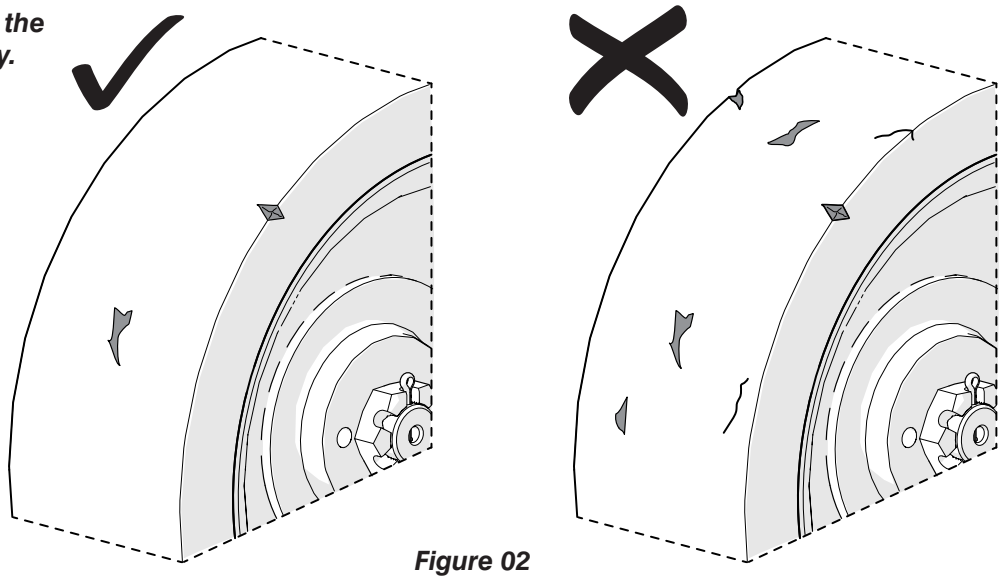

Figure 02

- **B - Frequent/periodic/pre-delivery inspection**

Do a check for damage or wear on each tire and rim.

- Look for damage or cracked welds on each rim. The rims should be round.
- Look for uneven or unusual wear on the tire.
- Look for flat spots on the tread face of the tire.
- The tire tread should be visible and not worn down completely. Refer to Figure 01.

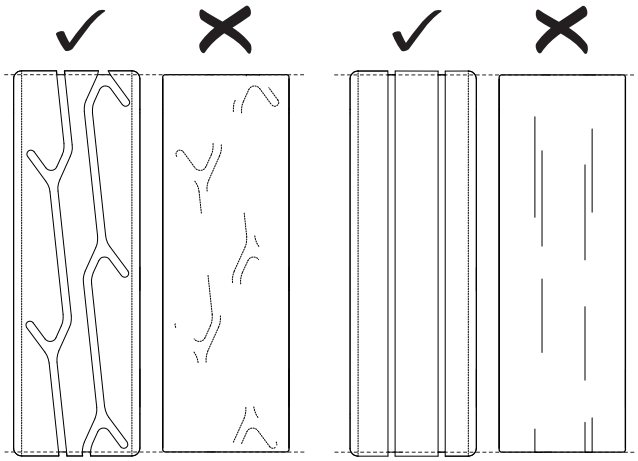

Figure 01

Do a check for cuts or missing chunks in the edges and tread face of the tire. Refer to Figure 02.

- The cut or missing chunk must not extend more than 10 mm (3/8”) towards the centre of the tire.
- Each cut or chunk should not be larger than 25 mm x 10 mm (1” x 3/8”), or deeper than 20 mm (3/4”).
- There should be no more than 2 cuts or chunks in each 1/4 section of the tire. There must be no more than 6 cuts or chunks in total in the tire.
- There should be no embedded debris.

Do a check of the wheel components and mounts.

- Make sure the wheels are correctly aligned vertically and horizontally.
- Make sure the **wheel motors** have no loose or missing parts and there is no visible damage.
- **C - Annual inspection**
  - Make sure the **castle nuts and/or wheel nuts** are in position and are tight.
  - Make sure the **cotter pins** are correctly installed.
  - If the cotter pin is not installed, refer to Table 2.4 Torque Specifications for proper torque information.
  - See Section 5 - Procedures for procedures.

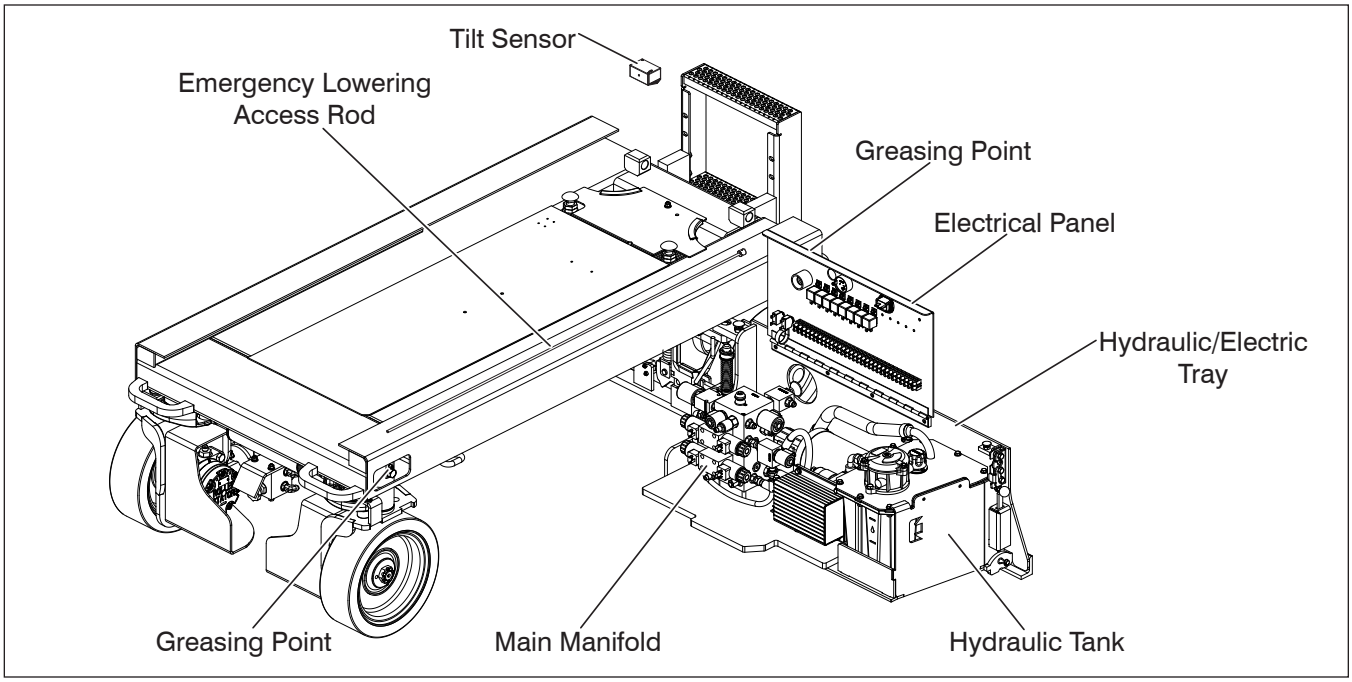

1.1-6 Hydraulic/Electric Tray Side

- Ensure tray latch is secure and in proper working order.

- **Pothole Protection Device (B)**
  - Ensure mechanisms have no sign of visible damage and are free from dirt and obstructions.

- **Hydraulic Tank (B, C)**
  - Ensure hydraulic filler cap is secure.
  - Ensure tank shows no visible damage and no evidence of hydraulic leakage.

- **Hydraulic Oil (B, C)**
  - Ensure platform is fully lowered, and then visually inspect the sight gauge located on the side of the hydraulic oil tank.
  - The hydraulic oil level should be at or slightly above the top mark of the sight glass.

  C - Annual Inspection
  - Refer to Section 1 - Hydraulic System & Component Maintenance and Repair

- **Hydraulic Pump and Motor (B)**
  - Ensure there are no loose or missing parts and there is no visible damage.

- **Electrical Panel (B)**
  - Ensure panel is properly secured and there is no visible damage.
  - Ensure there are no loose wire connections or missing fasteners.

- **Hydraulic Manifolds (B)**
  - Ensure all fittings and hoses are properly tightened and there is no evidence of hydraulic leakage.
  - Ensure there are no loose wire connections or missing fasteners.

- **Tilt Sensor (B)**
  - Ensure tilt sensor is properly secured and there is no visible damage.

- **Emergency Lowering Access Rod (If Equipped) (B)**
  - Ensure rod is properly secured and there is no visible damage.

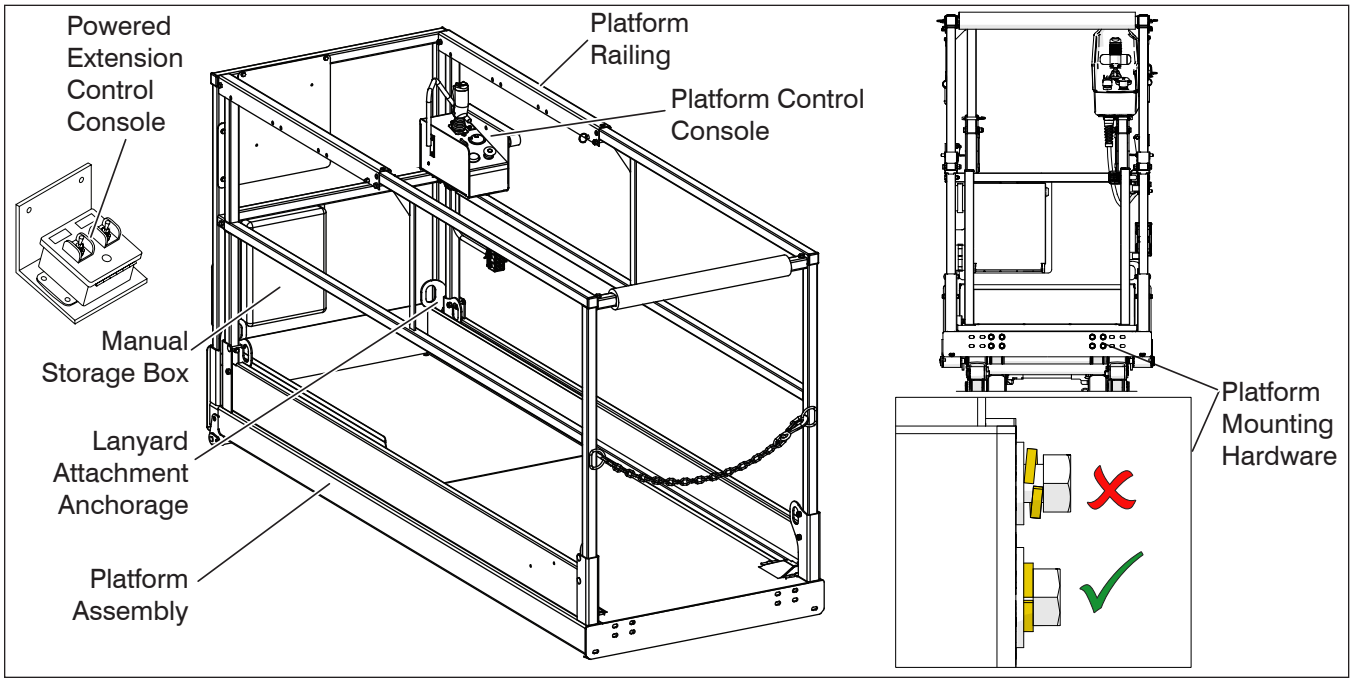

1.1-7 Platform Assembly

WARNING

Ensure that you maintain three points of contact to mount/dismount platform.

1. Use the ladder of aerial platform to access platform.
2. Close the gate/ Secure chain.

   - Ensure there are no loose or missing parts and there is no visible damage.
   - Ensure all fasteners are securely in place.
   - Ensure all railings are properly positioned and secured.
   - Ensure gate is in good working order.

- **Lanyard Attachment Anchorage (B)**
  - Ensure attachment rings are secure and no visible damage.
- **AC Outlet on Platform (B)**
  - Ensure outlet has no visible damage and free from dirt or obstructions.
- **Platform Control Console (B)**
  - Ensure all switches and controller are returned to neutral and are properly secured.
  - Ensure there are no loose or missing parts and there is no visible damage.
- **Powered Extension Control Console (If Equipped) (B)**
  - Ensure all switches are returned to neutral and are properly secured.
  - Ensure there are no loose or missing parts and there is no visible damage.

WARNING

Ensure that you maintain three points of contact to mount/dismount platform.

3. Use the ladder to dismount from the platform.

- **Platform mounting hardware (B)**
  - Make sure the fasteners are correctly installed and there are no missing or loose bolts, flat washers, or spring washers.
  - Make sure the spring washers are fully compressed.
  - Make sure there is no damage on the platform surface next to the flat washers.
  - If any of the above conditions are not met, immediately tag and lock the MEWP and remove it from service for repair.
  - 5.1-5 Platform Mounting Hardware for the maintenance/installation procedure.

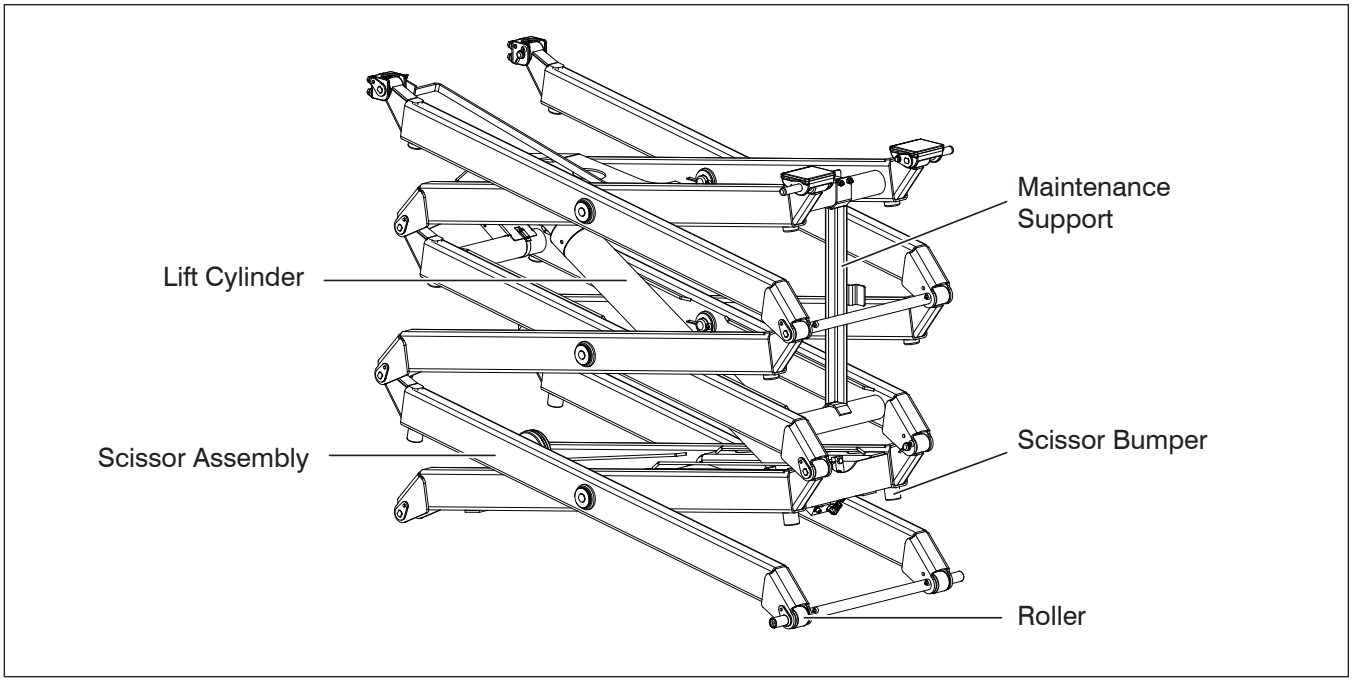

1.1-8 Lifting Mechanism

1. Raise the platform until there is adequate clearance to swing down the maintenance support.

- **Maintenance Support (B)**
  - Ensure maintenance support is properly secured and shows no visible damage.
- **Scissor Assembly (B)**
  - Ensure scissor assembly shows no visible damage and no signs of deformation in weldments.
  - Ensure all pins are properly secured.
  - Ensure cables and wires are properly routed and shows no signs of wear and/or physical damage.
- **Scissor Bumpers (B)**
  - Ensure bumpers are secure and shows no sign of visible damage.
- **Rollers (B)**
  - Ensure rollers are secure and there is no visible damage.
  - Ensure rollers' path of travel are free from dirt and obstructions.
- **Scissor Pin Inspection (B)**
  - Complete a structural inspection of the scissor pin connections, looking for indicators of pin and/or scissor arm damage. These indicators include, but are not limited to:
  - Noise coming from binding/seized pins
  - Rust forming near pin joint
  - Cracks in welds or in surrounding metal
  - Evidence of metal dust or shavings from wearing components
  - Broken/missing pin retainer bolts
  - Broken/missing pin retainers
  - Rotated pin
  - Elongation/enlargement of pin hole

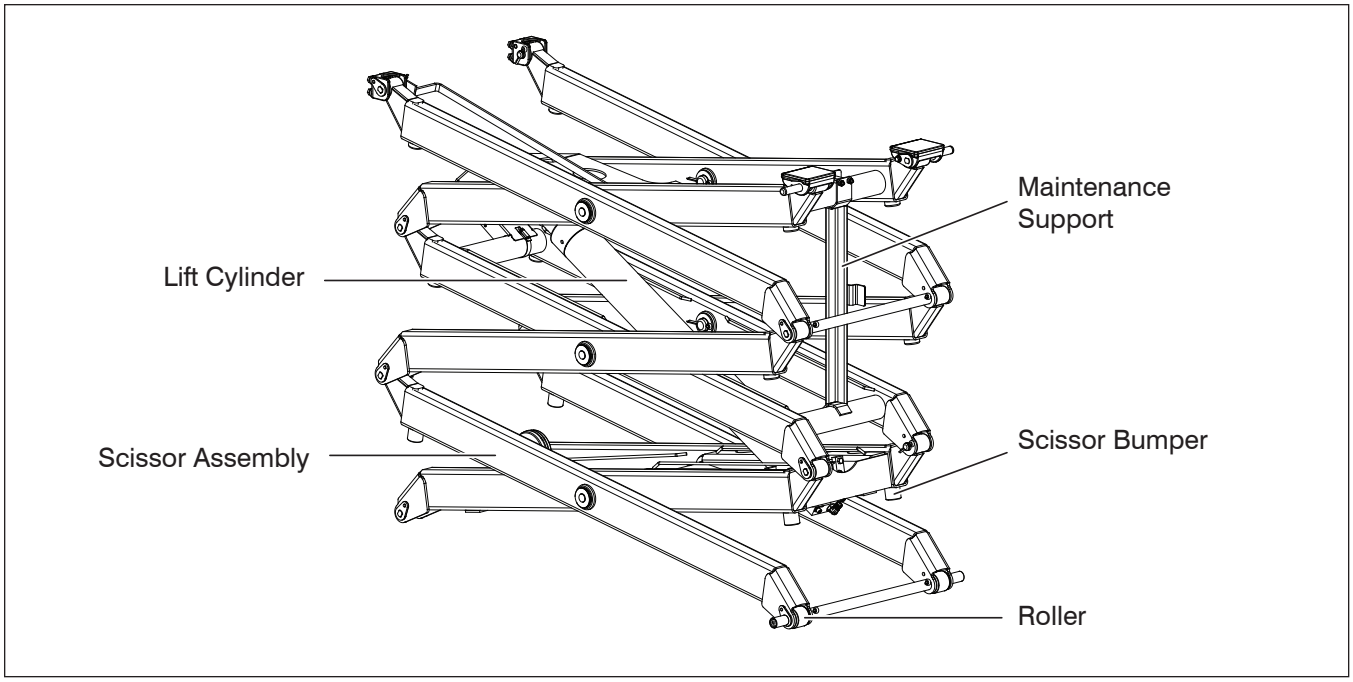

Examples of pivot pin connections with no damage:

- No rust
- Pin has not rotated
- Area is clear of dust/metal shaving
- Pin retainer/retainer bolts are in place

Pin retainer bolts in place

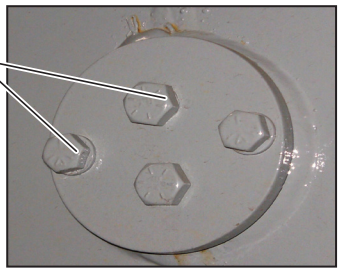

Center pin pivot - Outer

Pin retainer in place

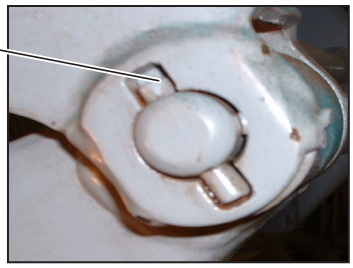



Center pin pivot - Middle

No rust. Pin has not rotated. Area is clean of dust/metal shavings

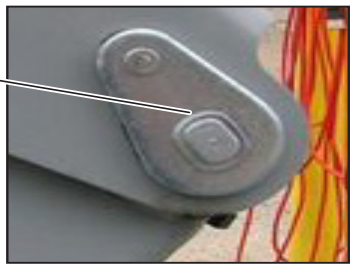

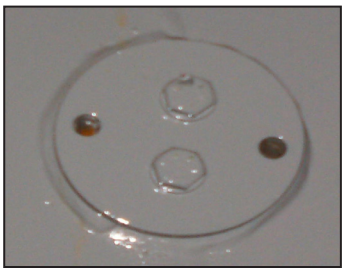

Center pin pivot - Inner

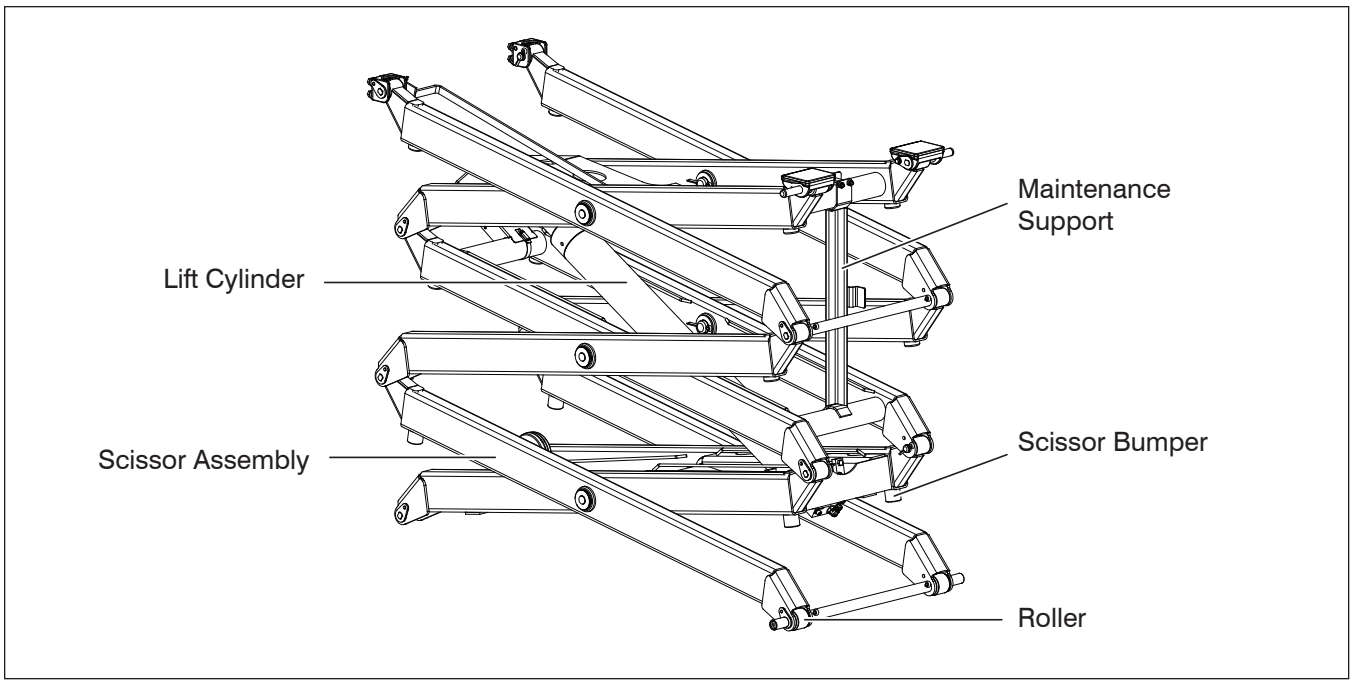

Examples of damaged pin connections:

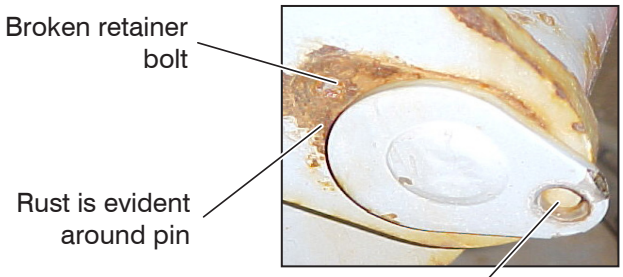

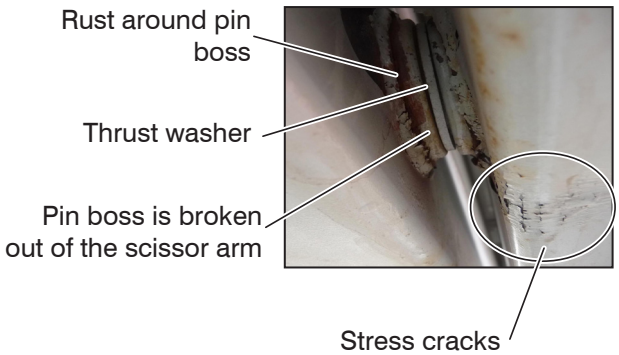

Scissor end pin connections showing symptoms of damage must be inspected after removing the applicable pins and bushings. The scissor bore should also be inspected at this time for any signs of damage, specifically elongation or ovality of the hole. Provided there is no structural damage to the scissor arms, the pins and bushings can be replaced with new components.

WARNING

Any units showing the above listed and/ or depicted signs of damage should be immediately removed from service and repaired by a qualified technician.

Any units with structural damage to any pin connection or scissor arm must be **immediately removed from service** and repaired by a qualified technician. Contact Skyjack Service for direction on how to repair the unit.

- **Lift Cylinder(s) (B)**
  - Ensure each lift cylinder is properly secured, there are no loose or missing parts and there is no evidence of damage.
  - Ensure all fittings and hoses are properly tightened and there is no evidence of hydraulic leakage.

2. Raise the platform until there is adequate clearance to swing up the maintenance support into storage bracket.

3. Fully lower the platform.

1.2 Function Tests

Function tests are designed to discover any malfunctions before aerial platform is put into service. The operator must understand and follow step-by-step instructions to test all aerial platform functions.

WARNING

Never use a malfunctioning aerial platform. If malfunctions are discovered, aerial platform must be tagged and placed out of service. Repairs to aerial platform may only be made by a qualified service technician.

After repairs are completed, perform a pre-operation inspection and a series of function tests again before putting aerial platform into service.

Prior to performing function tests, be sure to read and understand **Start Operation** section of the operating manual.

For function tests that are to be run, please refer to the operating manual that corresponds to the correct serial number. Here, there will be detailed instructions for which tests to perform, as well as how to properly and successfully perform them.

Notes

Section 2 - MAINTENANCE TABLES AND DIAGRAMS

Table 2.1 Specifications and Features....27
Table 2.2 Floor Loading Pressure....28
Table 2.3 Maximum Platform Capacities (Evenly Distributed)....30
Table 2.4 Torque Specifications....31
Table 2.5 Torque Specifications for Fasteners (Imperial)....32
Table 2.6 Torque Specifications for Fasteners (Metric)....33
Table 2.7 Torque Specifications for Hydraulic Couplings & Hoses....34

Table 2.1 Specifications and Features

MODEL	3215	3219
Weight *	2400 lb. 1089 kg	2580 lb. 1170 kg
Overall width	32" 0.81 m	
Overall length	70.0” 1.78 m	
Platform Size (inside)	26” x 64” 0.66 m x 1.63 m	
Height		
Working Height	21’ 6.4 m	25’ 7.6 m
Platform Elevated Height	15' 4.6 m	19’ 5.8 m
Stowed Platform Height	34.5” 0.88 m	39" 0.99 m
Stowed Height (Railings Up)	74” 1.88 m	78.5" 1.99 m
Drive Height	FULL	
Standard Operating Time		
Lift Time (No Load)	18 s	20 s
Lower Time (No Load)	32 s	39 s
Lift Time (Rated Load)	23 s	25 s
Lower Time (Rated Load)	24 s	29 s
Chassis		
Normal Drive Speed	2 mph 3.2 km/h	
Elevated Drive Speed	0.65 mph 1.05 km/h	
High Torque Drive Speed	N/A	
Gradeability (Ramp Angle)	23%	
Tires	12 x 4 x 8 Solid Rubber	
Hydraulic Oil		
Type	ATF Dexron III	
	Shell Naturelle HF-E 32	
Tank Capacity	2.9 gal. 10.9 L	

1058_ANSI_Specs_AC

* Weight with standard 3' (0.9 m) or 4' (1.2 m) extension platform.
Refer to nameplate for aerial platforms with 5' (1.5 m) or 6' (1.8 m) extension platform.

Table 2.2 Floor Loading Pressure

MODEL		Total Aerial Platform Weight		Total Aerial Platform Load					
				Wheel		LCP**		OUP**	
		lb.	kg	lb.	kg	psi	KPa (kN/m^2)	psf	KPa (kN/m^2)
3215	min*	2400	1089	960	435	100	689.5	160	7.5
	max*	3000	1361	1200	544	110	758.5	200	9.5
3219	min*	2580	1170	1032	468	100	689.5	170	8.0
	max*	3130	1420	1252	568	110	758.5	210	10.0

1058_ANSI_FL_AA

* **min** - Total aerial platform weight with no options

max - Aerial platform weight + all options + full capacity

** **LCP - Locally Concentrated Pressure** is a measure of how hard the aerial platform presses on the areas in direct contact with the floor. The floor covering (tile, carpet, etc.) must be able to withstand more that the indicated values above.

OUP - Overall Uniform Pressure is a measure of the average load the aerial platform imparts on the whole surface directly underneath it. The structure of the operating surface (beams, etc.) must be able to withstand more than the indicated values above.

NOTE:

The **LCP** or **OUP** that an individual surface can withstand varies from structure to structure and is generally determined by the engineer or architect for that particular structure.

Floor Loading Pressure

Locally Concentrated Pressure (LCP):

Foot Print Area = Length x Width

$$LCP = 0.4 \text{ X } \frac{\text{Weight of Aerial Platform + Capacity}}{\text{Foot Print Area}}$$

Overall Uniform Pressure (OUP):

Base Area = Length x Width

$$OUP = \frac{\text{Weight of Aerial Platform + Capacity}}{\text{Base Area}}$$

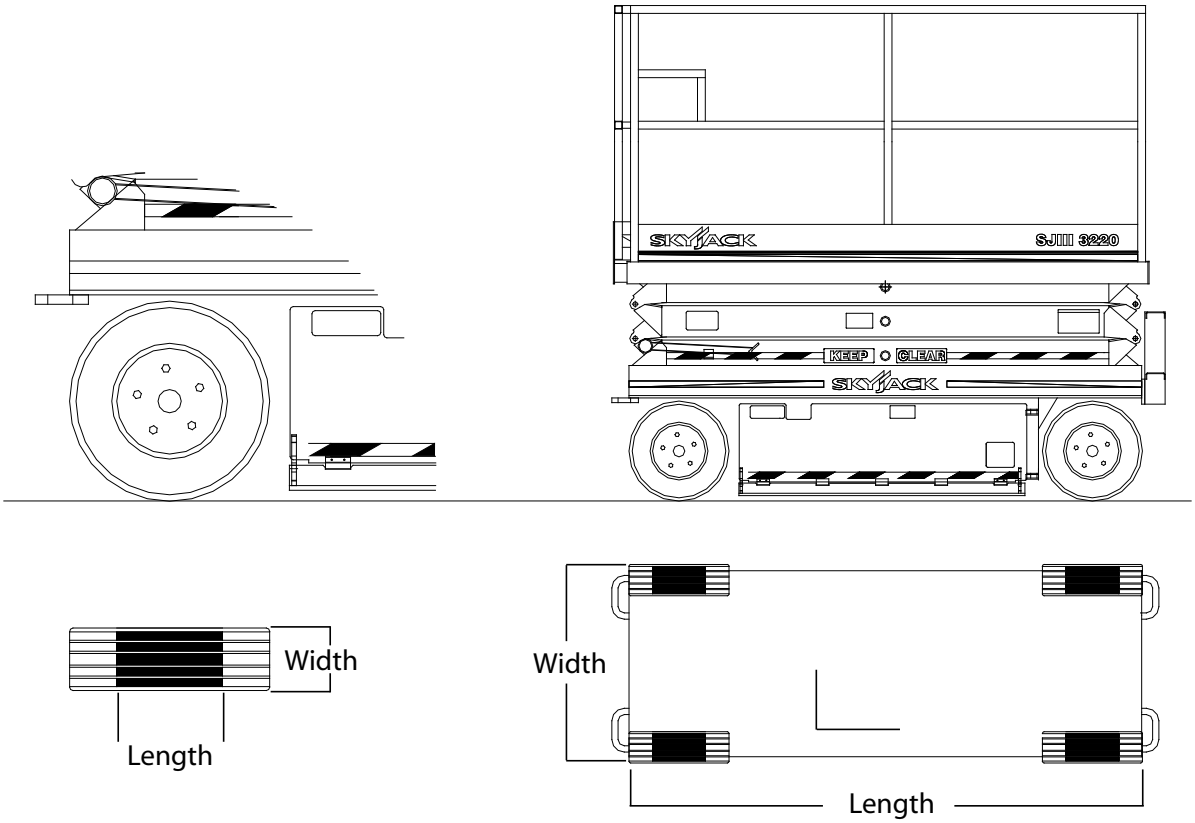

WARNING

Intermixing tires of different types or using tires of types other than those originally supplied with this equipment can adversely affect stability. Therefore, replace tires only with the exact original Skyjack-approved type. Failure to operate with matched approved tires in good condition may result in death or serious injury.

Table 2.3 Maximum Platform Capacities (Evenly Distributed)

MODEL	Manual Extension Platform				Powered Extension Platform		Maximum Wind Speed	Tilt Cutout Setting
	Total Capacity		Extension Capacity		Total Capacity	Extension Capacity		
3215	600 lb. 272 kg	2 Persons	250 lb. 113 kg	1 Person	N/A		28 mph 12.5 m/s	1.5 x 3.5
3219	550 lb. 249 kg	2 Persons	250 lb. 113 kg	1 Person	N/A		28 mph 12.5 m/s	1.5 x 3.5

1058_ANSI_MPC_AA

NOTE: Overall Capacity - Occupants and materials not to exceed rated load.

Table 2.4 Torque Specifications

Base	Torque	
Directional Valve Mounting Bolts	2.3-2.7 lb-ft (28-32 lb-in)	3.2 – 3.6 Nm
Wheel Mounting Bolts	90 lb-ft	122 Nm
Front Wheel Motor Nut	280 lb-ft	380 Nm
Front Wheel Castle Nut	150 lb-ft*	203 Nm*
Hydraulic Motor Mounting Bolts	85	115
Rear Wheel Castle Nut - Wet Brakes	150 lb-ft*	203 Nm*
Rear Wheel Castle Nut - Pin Brakes	Finger tight until snug**	
Wheel Brake Mounting Bolts	85 lb-ft	115 Nm

*See section 5 for the full torque procedure.

Cartridge							Coils
Valve Size	**8**	**38**	**58**	**10**	**12**	**16**	**All coil sizes**
Torque (lb-ft) max	20	20	20	25	35	50	4 to 5
Torque (lb-in) max	240	240	240	300	420	600	48 to 60
Torque (Nm) max	27.12	27.12	27.12	33.9	47.46	67.8	5.42 to 6.78

SAE Plugs								
Port Size	**2**	**4**	**5**	**6**	**8**	**10**	**12**	**16**
Torque (lb-ft) max	3	10	15	15	25	25	30	35
Torque (lb-in) max	36	120	180	180	300	300	360	420
Torque (Nm) max	4.07	13.56	20.34	20.34	33.9	33.9	40.68	47.46

Newton-meter = Nm **Pound-foot = lb-ft** **Pound-inch = lb-in**

Additional Torque Specifications may be found in Section 3.

60663AC

Table 2.5 Torque Specifications for Fasteners (Imperial)

When specific torque values are not provided within this manual for a task, use the torque values given in the table below.

IMPERIAL BOLT TORQUE CHART							
Size	Torque Type	SAE 2		SAE 5		SAE 8	
		Dry	Lubed	Dry	Lubed	Dry	Lubed
4-40	(in-lb)	(5)	(4)	(8)	(6)	(12)	(9)
	Nm	0.6	0.5	0.9	0.7	1.4	1.0
4-48	(in-lb)	(6)	(5)	(9)	(7)	(13)	(10)
	Nm	0.7	0.6	1.0	0.8	1.5	1.1
6-32	(in-lb)	(10)	(8)	(16)	(12)	(23)	(17)
	Nm	1.1	0.9	1.8	1.4	2.6	1.9
6-40	(in-lb)	(12)	(9)	(18)	(13)	(25)	(19)
	Nm	1.4	1.0	2.0	1.5	2.8	2.1
8-32	(in-lb)	(19)	(14)	(30)	(22)	(41)	(31)
	Nm	2.1	1.6	3.4	2.5	4.6	3.5
8-36	(in-lb)	(20)	(15)	(31)	(23)	(43)	(32)
	Nm	2.3	1.7	3.5	2.6	4.9	3.6
10-24	(in-lb)	(27)	(21)	(43)	(32)	(60)	(45)
	Nm	3.1	2.4	4.9	3.6	6.8	5.1
10-32	(in-lb)	(31)	(23)	(49)	(36)	(68)	(51)
	Nm	3.5	2.6	5.5	4.1	7.7	5.8
1/4-20	(in-lb) / ft-lb	(66)	(50)	8	(75)	12	9
	Nm	7.5	5.6	11	8.5	16	12
1/4-28	(in-lb) / ft-lb	(76)	(56)	10	(86)	14	10
	Nm	8.6	6.3	14	9.7	19	14
5/16-18	ft-lb	11	8	17	13	25	18
	Nm	15	11	23	18	34	24
5/16-24	ft-lb	12	9	19	14	25	20
	Nm	16	12	26	19	34	27
3/8-16	ft-lb	20	15	30	23	45	35
	Nm	27	20	41	31	61	47
3/8-24	ft-lb	23	17	35	25	50	35
	Nm	31	23	47	34	68	47
7/16-14	ft-lb	32	24	50	35	70	55
	Nm	43	33	68	47	95	75
7/16-20	ft-lb	36	27	55	40	80	60
	Nm	49	37	75	54	108	81
1/2-13	ft-lb	50	35	75	55	110	80
	Nm	68	47	102	75	149	108
1/2-20	ft-lb	55	40	90	65	120	90
	Nm	75	54	122	88	163	122

IMPERIAL BOLT TORQUE CHART							
Size	Torque Type	SAE 2		SAE 5		SAE 8	
		Dry	Lubed	Dry	Lubed	Dry	Lubed
9/16-12	ft-lb	70	55	110	80	150	110
	Nm	95	75	149	108	203	149
9/16-18	ft-lb	80	60	120	90	170	130
	Nm	108	81	163	122	230	176
5/8-11	ft-lb	100	75	150	110	220	170
	Nm	136	102	203	149	298	230
5/8-18	ft-lb	110	85	180	130	240	180
	Nm	149	115	244	176	325	244
3/4-10	ft-lb	175	130	260	200	380	280
	Nm	237	176	353	271	515	380
3/4-16	ft-lb	200	150	300	220	420	320
	Nm	271	203	407	298	569	434
7/8-9	ft-lb	170	125	430	320	600	460
	Nm	230	169	583	434	813	624
7/8-14	ft-lb	180	140	470	360	660	500
	Nm	244	190	637	488	895	678
1-8	ft-lb	250	190	640	480	900	680
	Nm	339	258	868	651	1220	922
1-12	ft-lb	270	210	710	530	1000	740
	Nm	366	285	963	719	1356	1003
1-14	ft-lb	280	210	730	540	1020	760
	Nm	380	285	990	732	1383	1030
1 1/8-7	ft-lb	350	270	800	600	1280	960
	Nm	475	366	1085	813	1735	1302
1 1/8-12	ft-lb	400	300	880	660	1440	1080
	Nm	542	407	1193	895	1952	1464
1 1/4-7	ft-lb	500	380	1120	840	1820	1360
	Nm	678	515	1519	1139	2468	1844
1 1/4-12	ft-lb	550	420	1240	920	2000	1500
	Nm	746	569	1681	1247	2712	2034
1 3/8-6	ft-lb	670	490	1460	1100	2380	1780
	Nm	908	664	1979	1491	3227	2413
1 3/8-12	ft-lb	750	560	1680	1260	2720	2040
	Nm	1017	759	2278	1708	3688	2766
1 1/2-6	ft-lb	870	650	1940	1460	3160	2360
	Nm	1180	881	2630	1979	4284	3200
1 1/2-12	ft-lb	980	730	2200	1640	3560	2660
	Nm	1329	990	2983	2224	4827	3606

Inch-Pound Force = in-lb Foot-Pound Force = ft-lb Newton-Meter = Nm

NOTE: Lubed includes lubricants such as lubrizing, oil, grease, and some uncured thread lockers. Refer to the specific thread locker manufacturer's instructions for specific torque adjustments.

Table 2.6 Torque Specifications for Fasteners (Metric)

When specific torque values are not provided within this manual for a task, use the torque values given in the table below.

METRIC BOLT TORQUE CHART					
Size	Torque Units	8.8		10.9	
		Dry	Lubed	Dry	Lubed
M5 x 0.80	(in-lb)	(54)	(41)	(78)	(59)
	Nm	6.1	4.6	8.8	6.7
M6 x 1.00	(in-lb)	(92)	(69)	(133)	(99)
	Nm	10.4	7.8	15	11.2
M7 x 1.00	(in-lb)	(156)	(116)	(222)	(167)
	Nm	17.6	13.1	25.1	18.9
M8 x 1.25	(in-lb)	(225)	(169)	(333)	(242)
	Nm	25.4	19.1	37.6	27.3
M10 x 1.50	ft-lb	37	28	53	40
	Nm	50	38	72	54
M12 x 1.75	ft-lb	65	49	93	69
	Nm	88	66	126	94
M14 x 2.00	ft-lb	104	78	148	111
	Nm	141	106	201	150
M16 x 2.00	ft-lb	161	121	230	172
	Nm	218	164	312	233
M18 x 2.50	ft-lb	222	167	318	238
	Nm	301	226	431	323
M20 x 2.50	ft-lb	314	235	449	337
	Nm	426	319	609	457
M22 x 2.50	ft-lb	428	321	613	460
	Nm	580	435	831	624
M24 x 3.00	ft-lb	543	407	776	582
	Nm	736	552	1052	789
M27 x 3.00	ft-lb	796	597	1139	854
	Nm	1079	809	1544	1158
M30 x 3.50	ft-lb	1079	809	1543	1158
	Nm	1463	1097	2092	1570
M33 x 3.50	ft-lb	1468	1101	2101	1576
	Nm	1990	1493	2849	2137
M36 x 4.00	ft-lb	1886	1415	2699	2024
	Nm	2557	1918	3659	2744
Inch-Pound Force = in-lb		Foot-Pound Force = ft-lb		Newton-Meter = Nm	

NOTE: Lubed includes lubricants such as lubrizing, oil, grease, and some uncured thread lockers. Refer to the specific thread locker manufacturer's instructions for specific torque adjustments.

Table 2.7 Torque Specifications for Hydraulic Couplings & Hoses

HYDRAULIC COUPLING TORQUE CHART O-Ring Port Connectors				
SAE Size	Steel Ports		Non-ferrous Ports	
	ft-lb	Nm	ft-lb	Nm
4	14-16	20-22	9-10	12-13
6	24-26	33-35	15-16	20-21
8	50-60	68-78	30-36	41-47
10	72-80	98-110	43-48	60-66
12	125-135	170-183	75-81	102-110
16	200-220	270-300	120-132	162-180
20	210-280	285-380	126-168	171-228
24	270-360	370-490	162-216	222-294
32	-	-	-	-

HOSE END TORQUE CHART for JIC									
Size		Steel				Brass			
Dash	Frac.	ft-lb		Nm		ft-lb		Nm	
		Min.	Max.	Min.	Max.	Min.	Max.	Min.	Max.
-4	1/4"	10	11	13	15	5	6	6.75	9
-6	3/8"	17	19	23	26	12	15	17	20
-8	1/2"	34	38	47	52	20	24	27.66	33
-10	5/8"	50	56	69	76	34	40	46.33	55
-12	3/4"	70	78	96	106	53	60	72.33	82
-16	1"	94	104	127	141	74	82	100.5	111
-20	1 1/4"	124	138	169	188	75	83	101.5	113
-24	1 1/2	156	173	212	235	79	87	107	118
-32	2"	219	243	296	329	158	175	214	237

HOSE END TORQUE CHART for Flat-Face O-Ring Seal (Steel)					
Size		Torque Specification			
Dash	Frac.	ft-lb		Nm	
		Min.	Max.	Min.	Max.
-4	1/4"	10	12	14	16
-6	3/8"	18	20	24	27
-8	1/2"	32	40	43	54
-10	5/8"	46	56	60	75
-12	3/4"	65	80	90	110
-14	1"	65	80	90	110
-16	1 1/4"	92	105	125	240
-20	1 1/2	125	140	170	190
-24	2"	150	180	200	245

Notes

Section 3 - SYSTEM COMPONENT IDENTIFICATION AND SCHEMATICS

Charts

3.1 Electrical Symbol Chart 37
3.2 Hydraulic Symbol Chart....38
3.3 Wire Number and Color Code....39
3.4 AC Cord Color Code....40

Parts List

3.5 Hydraulic Manifold and Port Identifications....42
3.6 Hydraulic Schematic Parts List....43
3.7a Electrical Component Parts List....44
3.7b Electrical Component Parts List (Continued)....45
3.7c Electrical Component Parts List (Continued)....46

Diagrams and Schematics

3.8a Platform Control Console Diagram....47
3.8b Platform Control Console Diagram - SGLE Option....48
3.9a Base Control Console Diagram (Including EE-Rated)....49
3.9b Base Control Console Diagram (Non EE-Rated only)....50
3.10a Scissor Arm Control Cable....51
3.10b Scissor Arm Control Cable....52
3.11 Holding Valve & Horn/Flashing Light Harnesses Diagrams....53
3.12 Limit Switch Assemblies Diagrams....54
3.13 Electrical Inverter Schematic & Panel Diagram (With Timer Cutout Relay)....55
3.14 Electrical Harness - ZTR Telematics....56
3.15 Hydraulic Schematic (Model 3215)....58
3.16 Hydraulic Schematic (Model 3219)....59
3.17 Main Manifold Harness and Holding Valve Harness....60
3.18 Main Manifold Harness and Holding Valve Harness (EE-Rated)....61
3.19 Elevate19 Telematics Harness....62
3.20a Electrical Panel Diagram....63
3.20b Electrical Panel Diagram....64
3.20c Electrical Panel Diagram....65
3.21a Electrical Panel Diagram (EE Rated)....66
3.21b Electrical Panel Diagram (EE Rated)....67
3.21c Electrical Panel Diagram (EE Rated)....68
3.22 Electrical Panel with Inverter Option....69
3.23 Horn/Tilt Switch/Flashing Light Diagram....70
3.24a Electrical Schematic (Equipped with no options)....71
3.24b Electrical Schematic (Equipped with no options)....72
3.24c Electrical Schematic (Equipped with no options)....73
3.25a Electrical Schematic (ANSI/CSA - Equipped with All options)....74
3.25b Electrical Schematic (ANSI/CSA - Equipped with All options)....75
3.25c Electrical Schematic (ANSI/CSA - Equipped with All options)....76
3.26a Electrical Schematic (EE Rated - Equipped with no options)....77
3.26b Electrical Schematic (EE Rated - Equipped with no options)....78
3.26c Electrical Schematic (EE Rated - Equipped with no options)....79
3.27a Electrical Schematic (EE Rated - Equipped with All options)....80
3.27b Electrical Schematic (EE Rated - Equipped with All options)....81

3.1 Electrical Symbol Chart

 CIRCUITS CROSSING NO CONNECTION	 HOURMETER	 KEY SWITCH	 LIMIT SWITCH N.O.
 CIRCUITS CONNECTED	 LIGHT	 FOOT SWITCH	 LIMIT SWITCH N.O. HELD CLOSED
 BATTERY	 HYDRAULIC VALVE COIL	 TOGGLE SWITCH	 LIMIT SWITCH N.C.
 GROUND	 PROPORTIONAL HYDRAULIC VALVE COIL	 PUSH BUTTON	 LIMIT SWITCH N.C. HELD OPEN
 FUSE	 ELECTRIC MOTOR	 ROTARY SWITCH	 SILICON CONTROLLED RECTIFIER
 CIRCUIT BREAKER	 HORN	 LIMIT SWITCH	 PROXIMITY SWITCH
 VOLT METER	 EMERGENCY STOP BUTTON	 CAM OPERATED LIMIT SWITCH	 PNP TRANSISTOR
 CAPACITOR	RESISTOR	 TILT SWITCH	 NPN TRANSISTOR
 POTENTIOMETER	 LEVEL SENSOR	 SINGLE POLE SINGLE THROWN RELAY	 PRESSURE/ VACUUM SWITCH
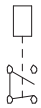 SINGLE POLE DOUBLE THROW RELAY	 DOUBLE POLE SINGLE THROW RELAY	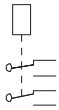 DOUBLE POLE DOUBLE THROW RELAY	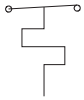 TEMPERATURE SWITCH
TRIPLE POLE DOUBLE THROW RELAY	DIODE	RHEOSTAT	

3.2 Hydraulic Symbol Chart

LINE CROSSING	VARIABLE DISPLACEMENT PUMP	SHUTTLE VALVE	VELOCITY FU
LINE JOINED	HAND PUMP	ACCUMULATOR, GAS CHARGED	SINGLE ACTI CYLINDER
HYDRAULIC TANK	RELIEF VALVE	CUSHION CYLINDER	DOUBLE ACT CYLINDER
HYDRAULIC FILTER WITH BYPASS	PRESSURE REDUCING VALVE	PRESSURE SWITCH	DOUBLE AC DOUBLE RODDED CYLINDER
ELECTRIC MOTOR	FIXED ORIFICE	MOTION CONTROL VALVE	SPRING APPL HYDRAULIC RELEASED BRAKE
ENGINE	ADJUSTABLE FLOW CONTROL	FLOW DIVIDER COMBINER	BRAKE CYLINDER
FIXED DISPLACEMENT PUMP	CHECK VALVE	COUNTER BALANCE VALVE	ROTARY ACTUATOR
VARIABLE DISPLACEMENT HYDRAULIC MOTOR	OIL COOLER	VALVE COIL	BI DIRECTION/ HYDRAULIC MOTOR
SERIES PARALLEL HYDRAULIC MOTOR	TWO POSITION TWO WAY NORMALLY CLOSED VALVE	TWO POSITION THREE WAY VALVE	THREE POSITI FOUR WAY CLOSED CENT OPEN PORT
TWO POSITION TWO WAY NORMALLY OPEN VALVE	TWO POSITION THREE WAY VALVE	THREE POSITION FOUR WAY CLOSED CENTER CLOSED PORT	
PRESSURE TRANSDUCER	MAIN LINES Solid	PILOT LINES Dashed	

3.3 Wire Number and Color Code

WIRE NO.	WIRE COLOR	WIRE NO.	WIRE COLOR	WIRE NO.	WIRE COLOR	WIRE NO.	WIRE COLOR	WIRE NO.	WIRE COLOR
00	WHT	20	ORG/BLU	44	YEL/WHT	67	ORG/BRN	92	GRN SHLD
000	WHT	21	WHT/RED	45	YEL/ORG	68	GREY	93	BLK SHLD
B1	BLU/PINK	23	BLK/WHT	46	RED/BLK	69	WHT/GRN	95	YEL/GREY
01	PUR/BLK	24	BLU/BLK	47	PUR/ORG	70	ORG/PINK	96	WHT/GREY
02	WHT	25	BRN/BLK	48	YEL/GREY	71	RED/ORG	97	ORG/GREY
03	GRN/PUR	26	BLU/YEL	49	GRN/RED	72	RED/BRN	98	RED SHLD
04	RED/YEL	27	RED/BLK/WHT	50	BRN	73	RED/PINK	98A	BLK SHLD
05	PUR	28	GRN	51	BLK/GRN	74	GRN/ GREY	99	BLK/GREY
06		29	GREY/ORG	52	GRN/BLU	75	GREY/PUR	103	BLK/PUR
07	RED	30	RED/GRN	53	BRN/RED	76	BRN/BLU	104	GRN/ORG
08	PUR/WHT	31	RED/WHT	54	PUR/RED	77	BRN/GREY	105	GRN/BRN
09	YEL	32	GRN/BLK	55	YEL/PUR	78	RED/BLU	106	GRN/PINK
10	BLU/WHT	33	GRN/WHT	56	YEL/BLK	79	BRN/PUR	107	BLK/BLU
11	WHT/ORG	34	ORG/BLK	57	BRN/GRN	80	GREY/ WHT	108	YEL/BRN
12	RED/YEL/ BLK	35	ORG/WHT	58	WHT/PUR	81	GREY/BLK	109	GRN/YEL
13	ORG	36	RED/PUR	59	YEL/BLU	82	BRN/WHT	110A	BLU
14	BLK	37	WHT/RED/ BLK	60	WHT/BLU	83	BLU/GREY	110B	BRN
15	BLU	38	ORG/RED	61	GREY/BRN	84	WHT/BLK/ PUR	111	GREY/GRN
16	WHT/BLK	39	BLK/RED	62	GREY/RED	85	GREY/BLU	112	BLU/ORG
17	BLU/GRN	40	BLU/RED	63	GREY/YEL	86/87	PUR/BLU	113	BLU/BRN
18	GRN/BLU	41	BLU/PUR	64	WHT/BRN	88	BLK/ORG	114	YEL/RED
19	ORG/GRN	42	PINK	65	YEL/PINK	90	RED/GREY	115	WHT/PUR
22	PUR/GRN	43	WHT/YEL	66	ORG/YEL	91	RED SHLD	118	PUR/PINK

This table is to be used as a wire number/color reference for all electrical drawings and schematics. All wire numbers will retain their origional color coding, for example if wire 7 is red, wire 7A, 7B, and 7C will also be red.

3.4 AC Cord Color Code

Standard Definition	NEC Colours	IEC Colours
Protective Ground/Protective Earth	Green	Green-Yellow
Neutral	White	Blue
Line, Single Phase	Black	Black/Brown/Grey

Note: Standard colours referenced from IEC 60445:2010, Annex A:Table A.1

Notes

3.5 Hydraulic Manifold and Port Identifications

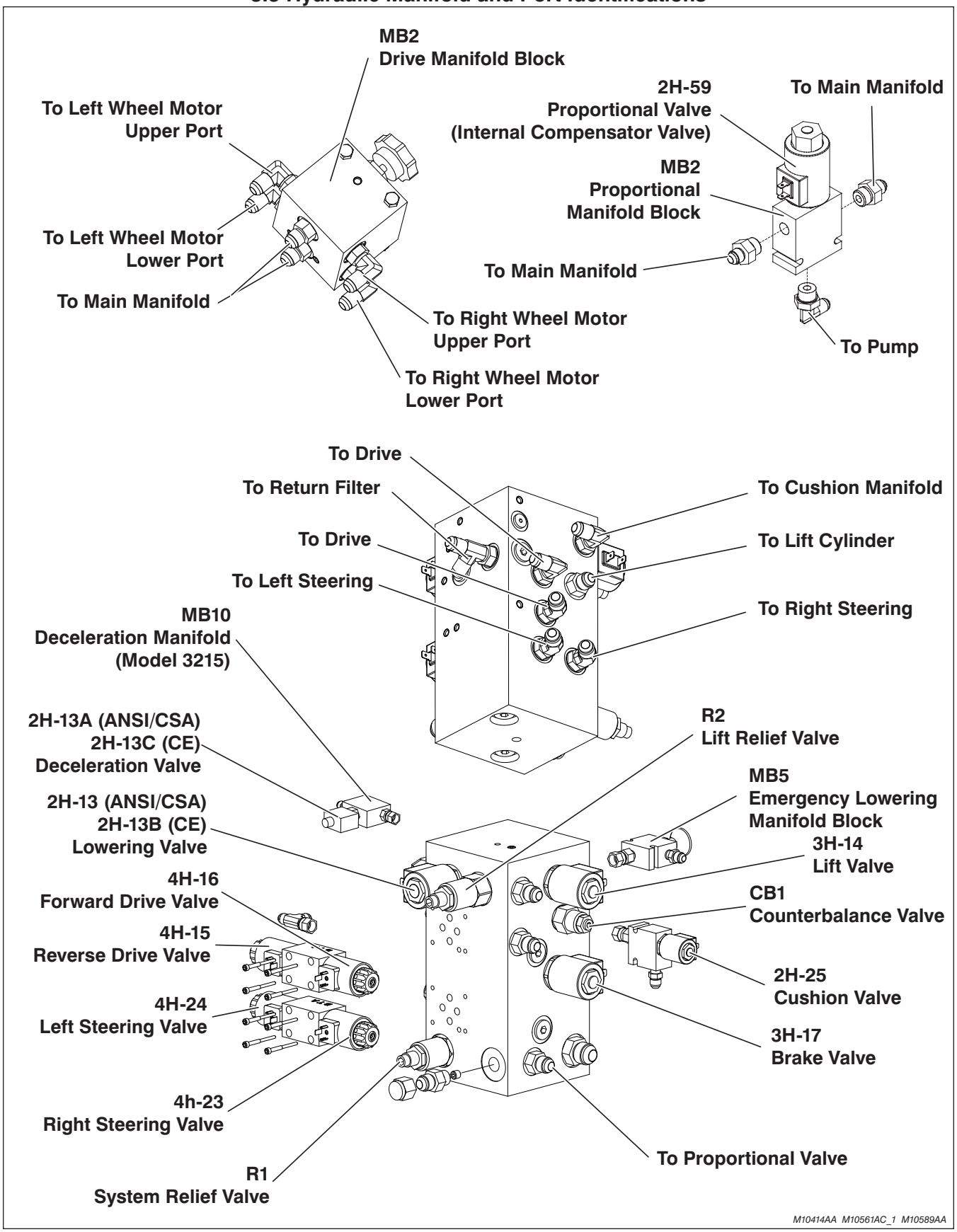

3.6 Hydraulic Schematic Parts List

AI

Index No.	Skyjack Part No.	Qty.	Description
2H-13	103655	1	VALVE, Control (Lowering)
2H-13A	134822	1	VALVE, Control (Deceleration) **(Model 3215)**
2H-13-1	107629	1	VALVE, Control (Holding)
2H-25	128113	1	VALVE, Control (Cushion)
2H-59B	132749	1	VALVE, Control (Proportional)
3H-14	106273	1	VALVE, Control (Lift)
3H-17	103605	1	VALVE, Control (Brake)
4H-15	153334	1	VALVE, Control (Reverse drive) (Hytos) (includes 4H-16)
4H-16	-	1	VALVE, Control (Forward drive) (Hytos)
4H-23	153334	1	VALVE, Control (Right steer) (Hytos) (includes 4H-24)
4H-24	-	1	VALVE, Control (Left steer) (Hytos)
C2	199839	1	CYLINDER (Lift)
C3	121087	1	CYLINDER (Steer)
C4	127667	1	CYLINDER (Brake)
CB1	147888	1	VALVE, Counterbalance (2750 psi)
F1	109568	1	FILTER, Return
MI	139412	1	MOTOR, Hydraulic drive (White Hydraulics)
M2	139412	1	MOTOR, Hydraulic drive (White Hydraulics)
MB1	127629	1	BLOCK, Manifold (Main)
MB2	139307	1	BLOCK, Manifold (Drive)
MB3	128113	1	BLOCK, Manifold (Cushion valve)
MB4	130480	1	BLOCK, Manifold (Holding valve)
MB5	126761	1	BLOCK, Manifold (Lowering valve)
MB9	132748	1	BLOCK, Manifold (Proportional control)
MB10	136419	1	BLOCK, Manifold (Deceleration Valve) **(Model 3215)** (For model 3215 with serial number 10001473 & Below)
	199550	1	BLOCK, Manifold (Deceleration Valve) **(Model 3215)** (For model 3215 with serial number 10001474 & Above)
O2	130046	1	ORIFICE (0.063” diameter) (Lowering) **(Model 3219)**
O3	108002	1	ORIFICE (0.040” diameter) (Cushion)
O4	130407	1	ORIFICE (0.051” diameter) (Brake)
O5	108002	2	ORIFICE (0.04” diameter) (Steering)
O6	105281	1	ORIFICE (0.067” diameter) (Emergency Lowering)
O7	147656	1	ORIFICE (0.024” diameter) (Drive)
P1	147661	1	PUMP, Hydraulic
PT1	134431	1	TRANSDUCER, Pressure (2000 psi) (**Model 3215)**
	134432	1	TRANSDUCER, Pressure (3000 psi) **(Model 3219)**
R1	104534	1	VALVE, Relief (System)
R2	104534	1	VALVE, Relief (Lift)
V1	107271	1	VALVE (Emergency lowering)
V2	103136	1	VALVE (Free-wheeling)

3.7a Electrical Component Parts List

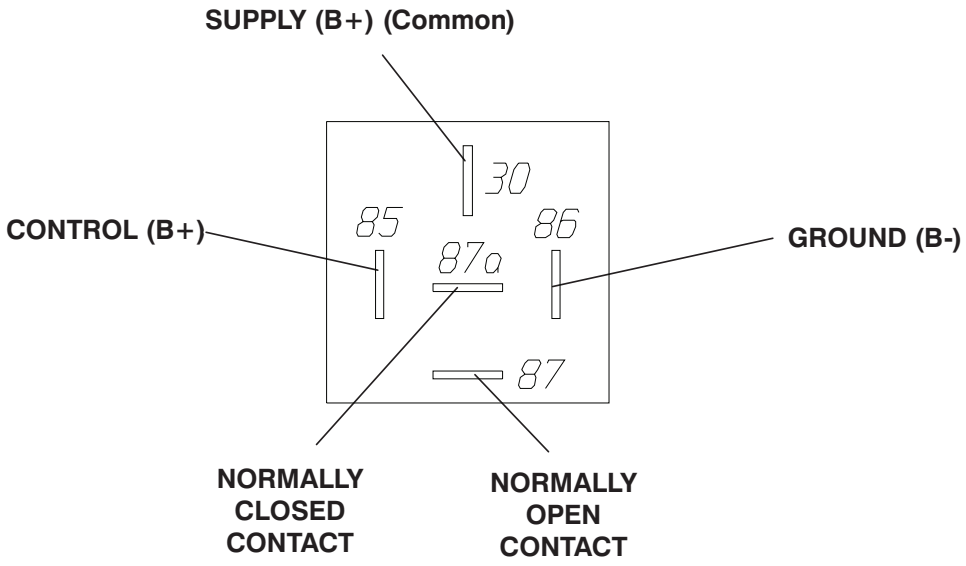

Index No.	Skyjack Part No.	Qty.	Description
17CCR	108589	1	RELAY, 24 Volt (Cushion)
17CR	108589	1	RELAY, 24 Volt (Steer)
17CR1	108589	1	RELAY, 24 Volt (Transfer)
21ACR	108589	1	RELAY, 24 Volt (Proportional)
28CR	108589	1	RELAY, 24 Volt (Tilt switch)
L1CR	127154	1	RELAY, 12 Volt (Charger cutout)
2H-13	103605	1	COIL, 24 Volt (Lowering valve)
2H-13A	137006	1	COIL, 24 Volt (Deceleration valve) **(Model 3215)**
2H-13-1	104493	1	COIL, 24 Volt (Holding valve)
2H-25	103605	1	COIL, 24 Volt (Cushion)
2H-59	115370	1	COIL, 24 Volt (Proportional valve)
3H-14	106273	1	COIL, 24 Volt (Lift valve)
3H-17	103623	1	COIL, 24 Volt (Brake valve)
4H-15	153335	1	COIL, 24 Volt (Reverse drive spool valve) (Hytos)
4H-16	153335	1	COIL, 24 Volt (Forward drive spool valve) (Hytos)

Parts list continued on the following page.

3.7b Electrical Component Parts List (Continued)

AJ

Index No.	Skyjack Part No.	Qty.	Description
			Parts list continued on the previous page.
4H-23	153335	1	COIL, 24 Volt (Right steer spool valve) (Hytos)
4H-24	153335	1	COIL, 24 Volt (Left steer spool valve) (Hytos)
B1-B4	$	4	BATTERY, 6 Volt (Trojan #T2200)
BC	128537	1	CHARGER, Battery (24 Volt)
BCI	122093	1	BATTERY CHARGE INDICATOR
BP-29	103057	1	BEEPER (28 Volt)
C1	146475	1	CONTACTOR, Solenoid (hydraulic proportional control)
	165865	1	CONTACTOR, Solenoid (Motor controller/MC models)
CAP1	103319	1	CAPACITOR (1000 uF, 35 Volt)
CAP2	110699	1	CAPACITOR (0.47 uF, 50 Volt)
CB1	117325	1	BREAKER, Circuit (15 Amp)
CB2	117325	1	BREAKER, Circuit (15 Amp)
CRD1	146640	-	PLATFORM CONTROL CABLE ASSEMBLY
CRD2	146592	-	SCISSOR ARM CONTROL CABLE ASSEMBLY **(Model 3219)**
	146601	-	SCISSOR ARM CONTROL CABLE ASSEMBLY **(Model 3215)**
CRD3	146585	-	ELECTRIC PANEL CONTROL CABLE ASSEMBLY
DCM1	147664	1	MOTOR, 24 Volt
F1	310517	1	FUSE, 300 Amp
FL-22	121477	1	FLASHING LIGHT 24VDC (superior universal)
FL-29	103743	1	FLASHER (option)
H1	146649	1	HORN, Operator (Low tone)
LED-1	147061	1	POWER INDICATOR LIGHT (Platform control console)
LED-2	147061	1	POWER INDICATOR LIGHT (Base control console)
LS1A	121975	1	LIMIT SWITCH (High speed)
LS1B	199485	1	LIMIT SWITCH (High speed)
LS4	199451	1	LIMIT SWITCH (Battery tray - pothole protection)
	199459	1	LIMIT SWITCH (Battery tray - pothole protection) **(EE-Rated)**
LS5	199452	1	LIMIT SWITCH (Hydraulic tray - pothole protection)
	199460	1	LIMIT SWITCH (Battery tray - pothole protection) **(EE-Rated)**
LS6	121975	1	LIMIT SWITCH (Drive override)
LS7	199485	1	LIMIT SWITCH (Deceleration)
RST1	119629	1	RESISTOR, Control Box (2.7K Ohms)
RST2	168598	1	RESISTOR, Proportional Relay Limp Mode (15 Ohms, 25W)
RST3	116505	1	RESISTOR, Low voltage protection (56 Ohms, 2W)
S1	119725	1	SWITCH, Main power disconnect
S2	147054	2	N.O. CONTACT (Raise/Lower)
S3	116382	1	SWITCH, Toggle (Lift/Off/Drive)
			Parts list continued on the following page.

AI

3.7c Electrical Component Parts List (Continued)

Index No.	Skyjack Part No.	Qty.	Description
			Parts list continued on the previous page.
S4	147053	2	N.C. CONTACT (Platform - emergency stop switch)
S7	123994	1	PROPORTIONAL CONTROLLER ASSEMBLY
S7-1	122869	1	SWITCH, Neutral
S7-2	122877	1	SWITCH, Right steer
S7-3	122877	1	SWITCH, Left steer
S7-6	122872	1	SWITCH, Enable pushbutton
S8	147054	1	N.O. CONTACT (Horn)
S10	147053	2	N.C. CONTACT (Off/Platform)
	147054	1	N.O. CONTACT (Base)
S27	115574	1	SWITCH, Toggle (Inclined drive/level drive)
S28	147053	1	N.C. CONTACT (Base - emergency stop switch)
TS1	146658	1	TILT SWITCH
TT	195940	1	• HOURMETER, Digital
			$ - Purchased locally

3.8a Platform Control Console Diagram

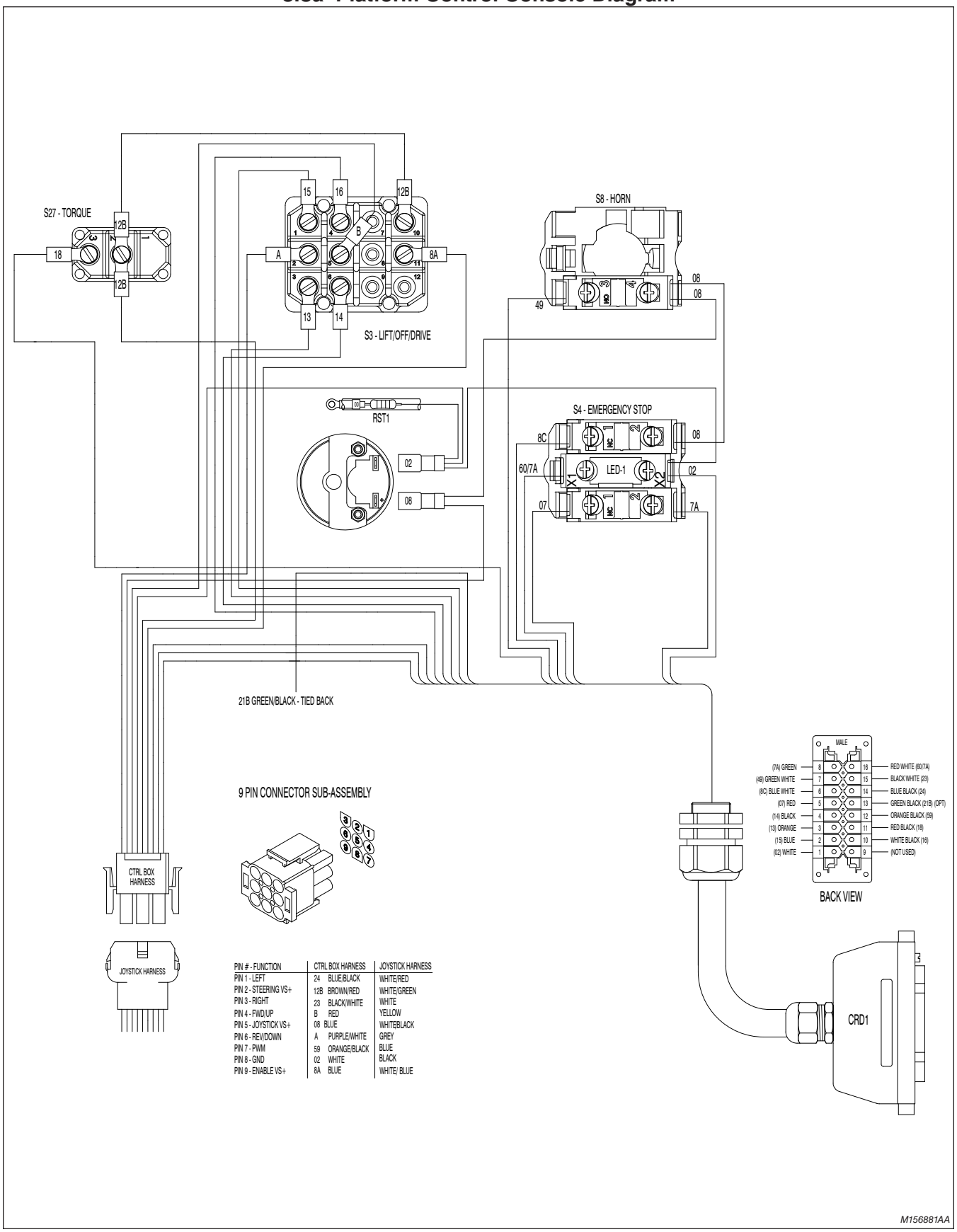

PIN # - FUNCTION	CTRL BOX HARNESS	JOYSTICK HARNESS
PIN 1 - LEFT	24 BLUE/BLACK	WHITE/RED
PIN 2 - STEERING VS+	12B BROWN/RED	WHITE/GREEN
PIN 3 - RIGHT	23 BLACK/WHITE	WHITE
PIN 4 - FWD/UP	B RED	YELLOW
PIN 5 - JOYSTICK VS+	08 BLUE	WHITEBLACK
PIN 6 - REV/DOWN	A PURPLE/WHITE	GREY
PIN 7 - PWM	59 ORANGE/BLACK	BLUE
PIN 8 - GND	02 WHITE	BLACK
PIN 9 - ENABLE VS+	8A BLUE	WHITE/ BLUE

M156881AA

3.8b Platform Control Console Diagram - SGLE Option

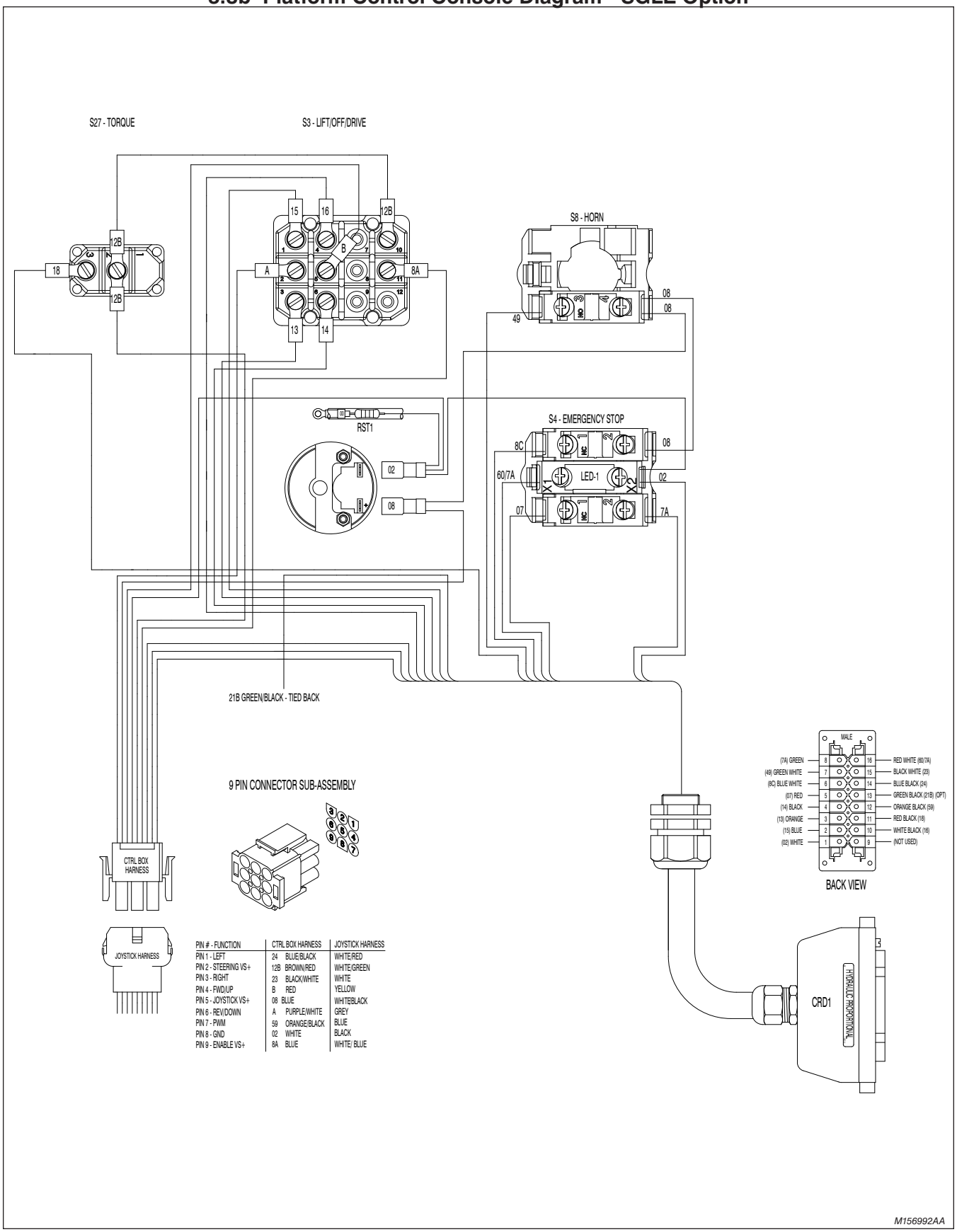

PIN # - FUNCTION	CTRL BOX HARNESS		JOYSTICK HARNESS
PIN 1 - LEFT	24	BLUE/BLACK	WHITE/RED
PIN 2 - STEERING VS+	12B	BROWN/RED	WHITE/GREEN
PIN 3 - RIGHT	23	BLACK/WHITE	WHITE
PIN 4 - FWD/UP	B	RED	YELLOW
PIN 5 - JOYSTICK VS+	08	BLUE	WHITEBLACK
PIN 6 - REV/DOWN	A	PURPLE/WHITE	GREY
PIN 7 - PWM	59	ORANGE/BLACK	BLUE
PIN 8 - GND	02	WHITE	BLACK
PIN 9 - ENABLE VS+	8A	BLUE	WHITE/ BLUE

3.9a Base Control Console Diagram (Including EE-Rated)

AI

Serial Breakdown Reference Chart	
Model	Serial Number
SJIII 3215	10001533 & below
SJIII 3219	22093185 & below
SJIII 3215 EE-Rated	10000631 & above
SJIII 3219 EE-Rated	22022793 & above

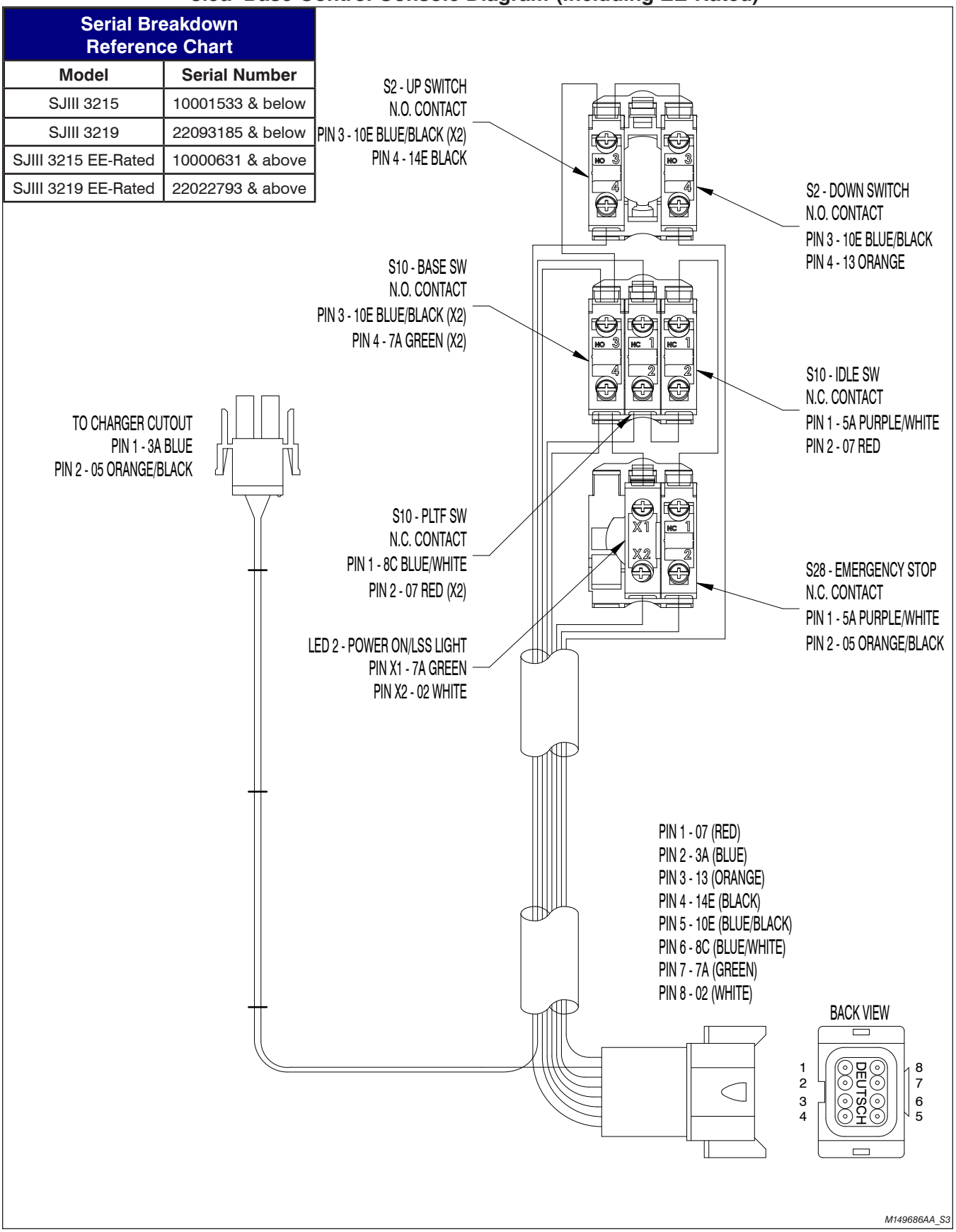

AI 3.9b Base Control Console Diagram (Non EE-Rated only)

Serial Breakdown Reference Chart	
Model	**Serial Number**
SJIII 3215	10001534 & above
SJIII 3219	22093186 & above

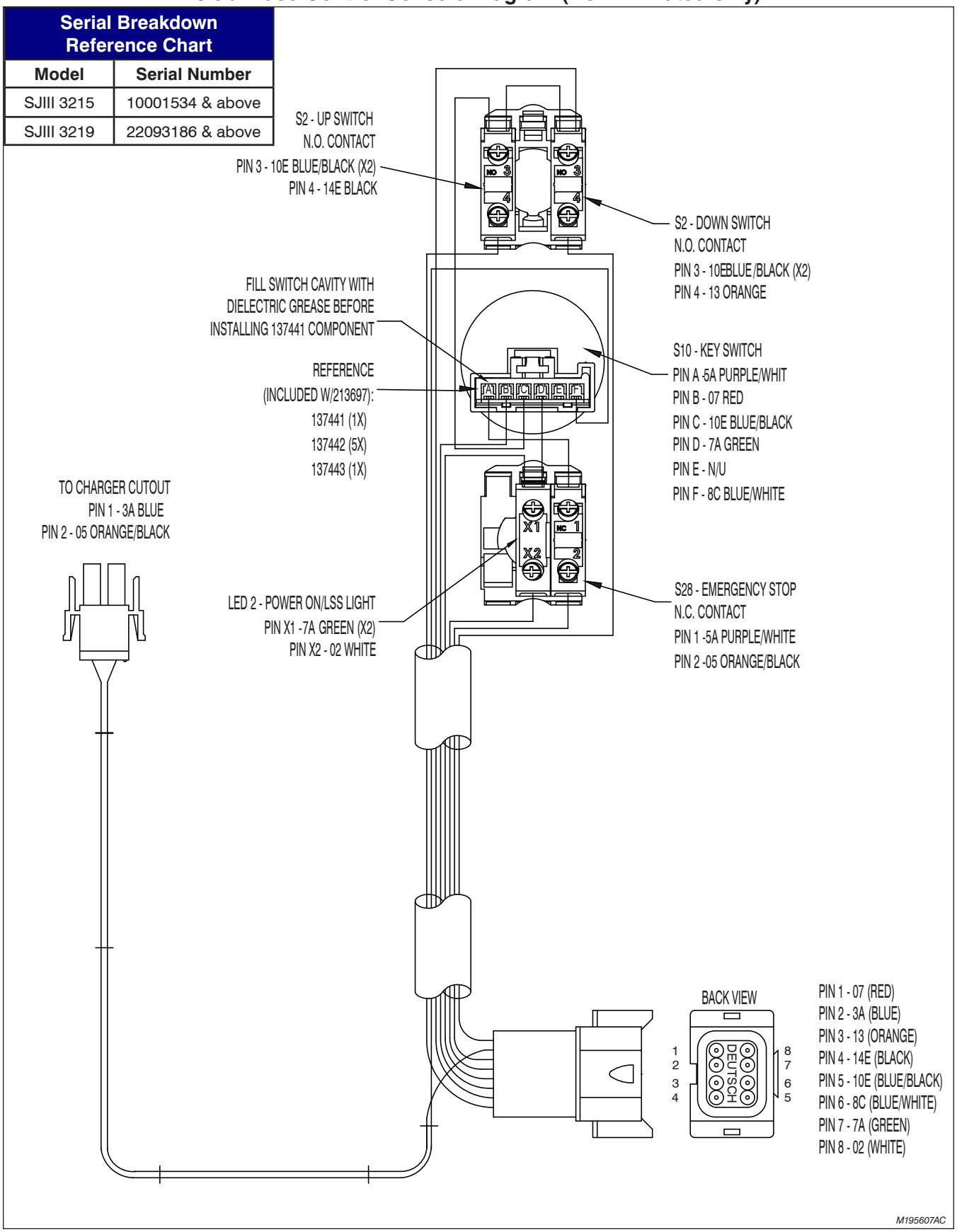

3.10a Scissor Arm Control Cable

AK

CONTROL CABLE OPTIONS

WIRE COLOUR	EUROPE WIRE NUMBER	N.A WIRE NUMBER
GREEN/BLACK	21B	21B
RED/WHITE	60	7A

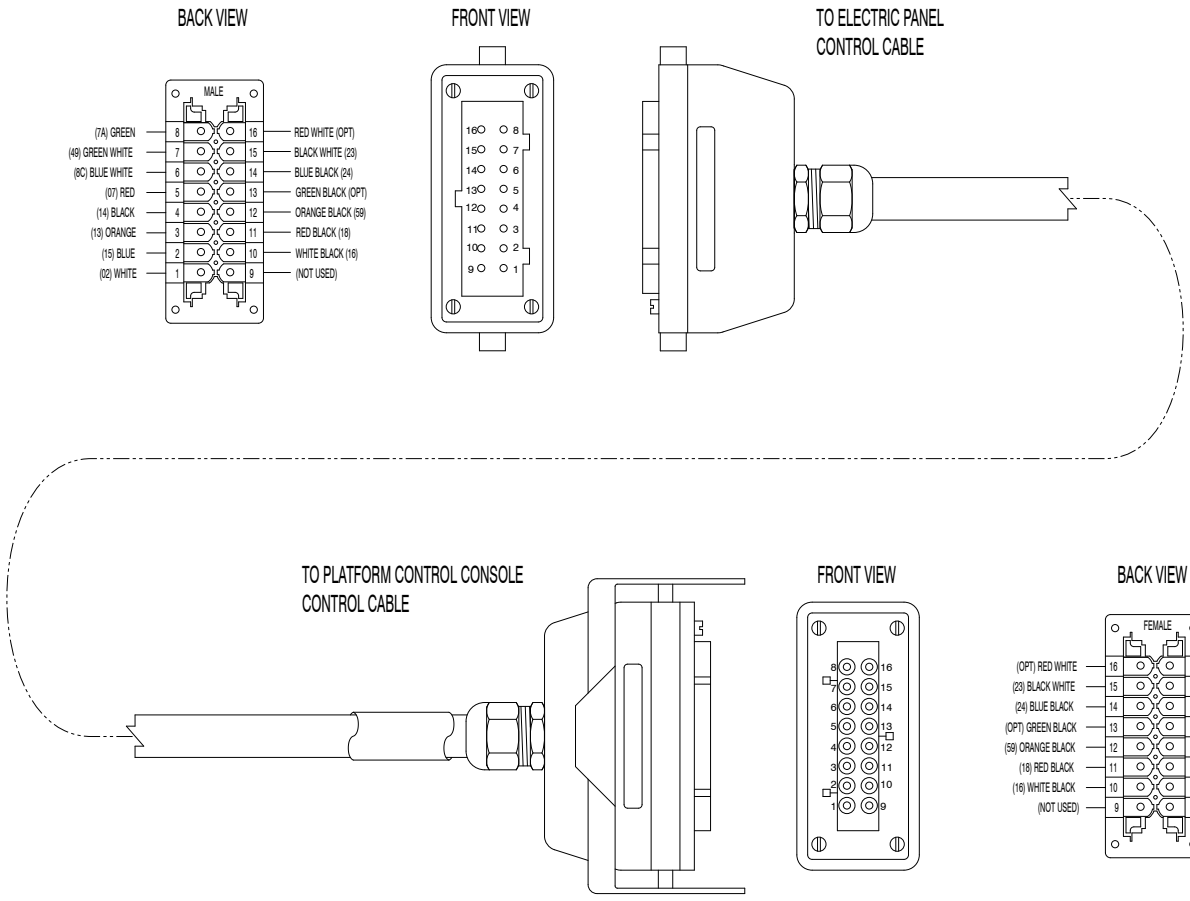

M146650AB_S3

AK 3.10b Scissor Arm Control Cable

CONTROL CABLE OPTIONS		
WIRE COLOUR	EUROPE WIRE NUMBER	N.A WIRE NUMBER
GREEN/BLACK	21B	9A
RED/WHITE	60	7A

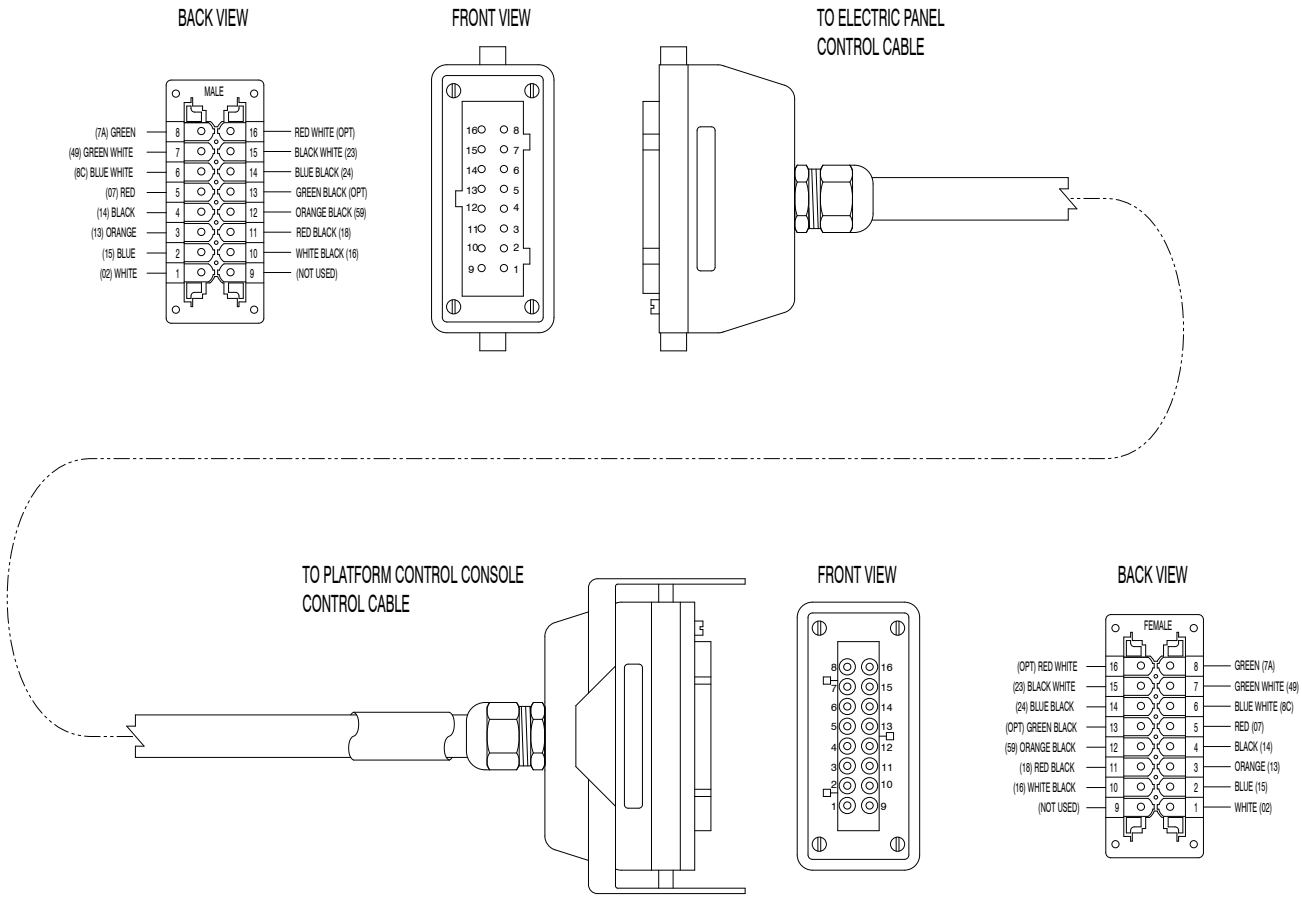

M163097AB

3.11 Holding Valve & Horn/Flashing Light Harnesses Diagrams

AD

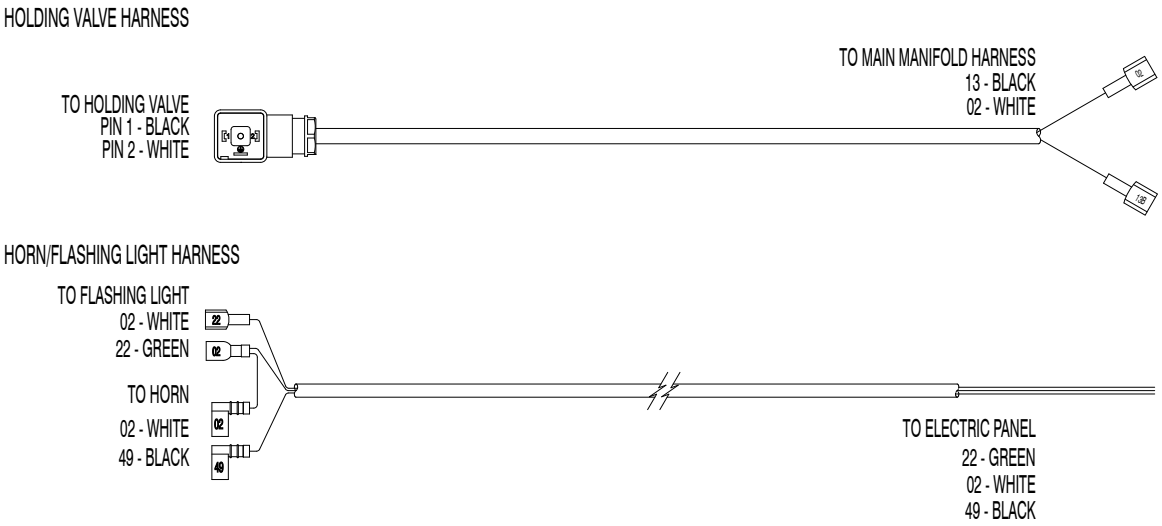

M134508AC_M146578AC_1

3.12 Limit Switch Assemblies Diagrams

LIMIT SWITCH ASSEMBLY - Model 3215 (For 3215 with serial number between 10000837 and below)

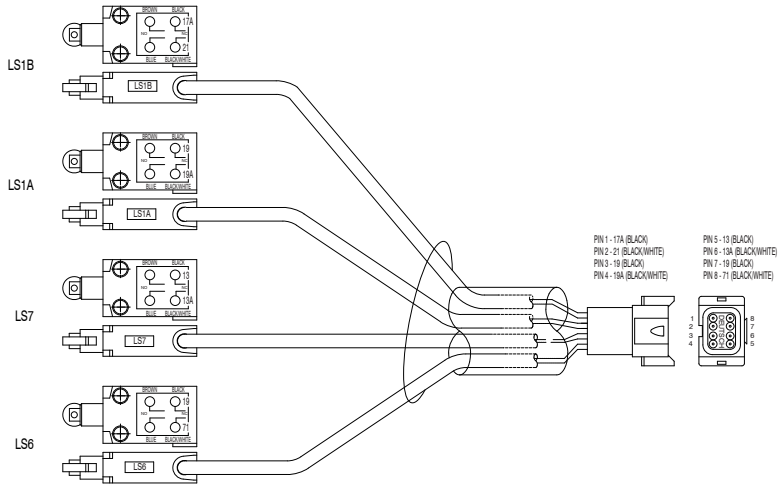

LIMIT SWITCH ASSEMBLY - Model 3219 (For 3219 with serial number between 22036593 and below)

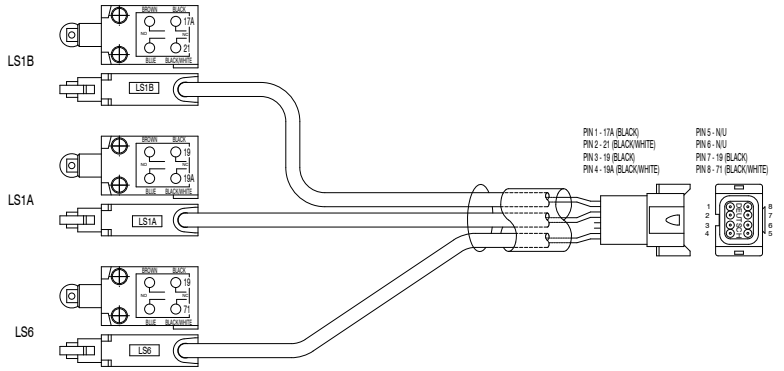

LIMIT SWITCH ASSEMBLY - Model 3215 (For 3215 with serial number between 10000838 and above)

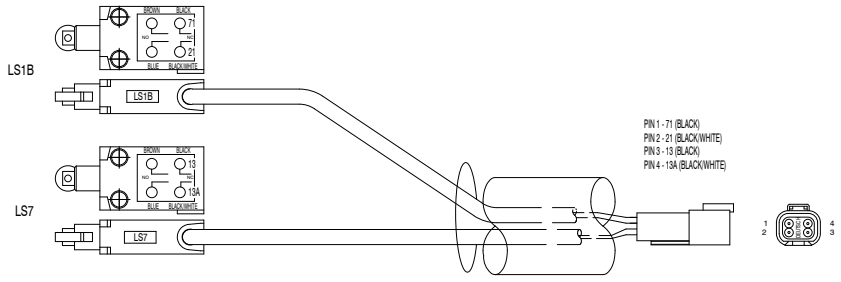

LIMIT SWITCH ASSEMBLY - Model 3219 (For 3219 with serial number between 22036594 and above)

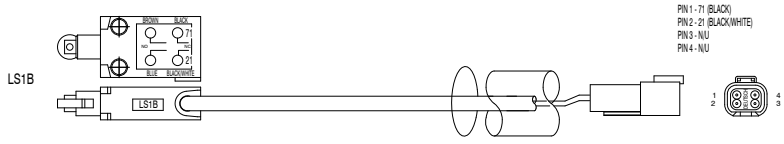

M134508AC_M146578AC_1

3.13 Electrical Inverter Schematic & Panel Diagram (With Timer Cutout Relay)

Electrical Schematic

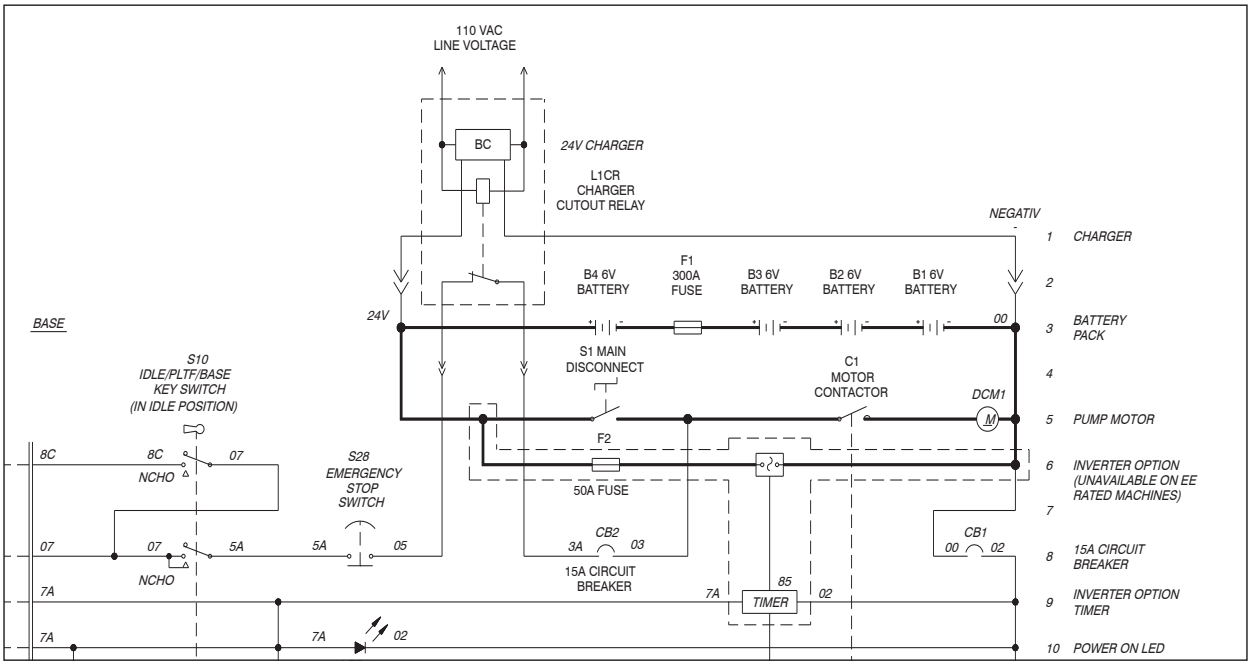

Electrical Panel

Serial Breakdown Reference Chart	
Model	**Serial Number**
SJIII 3215	10001533 & below
SJIII 3219	22093185 & below

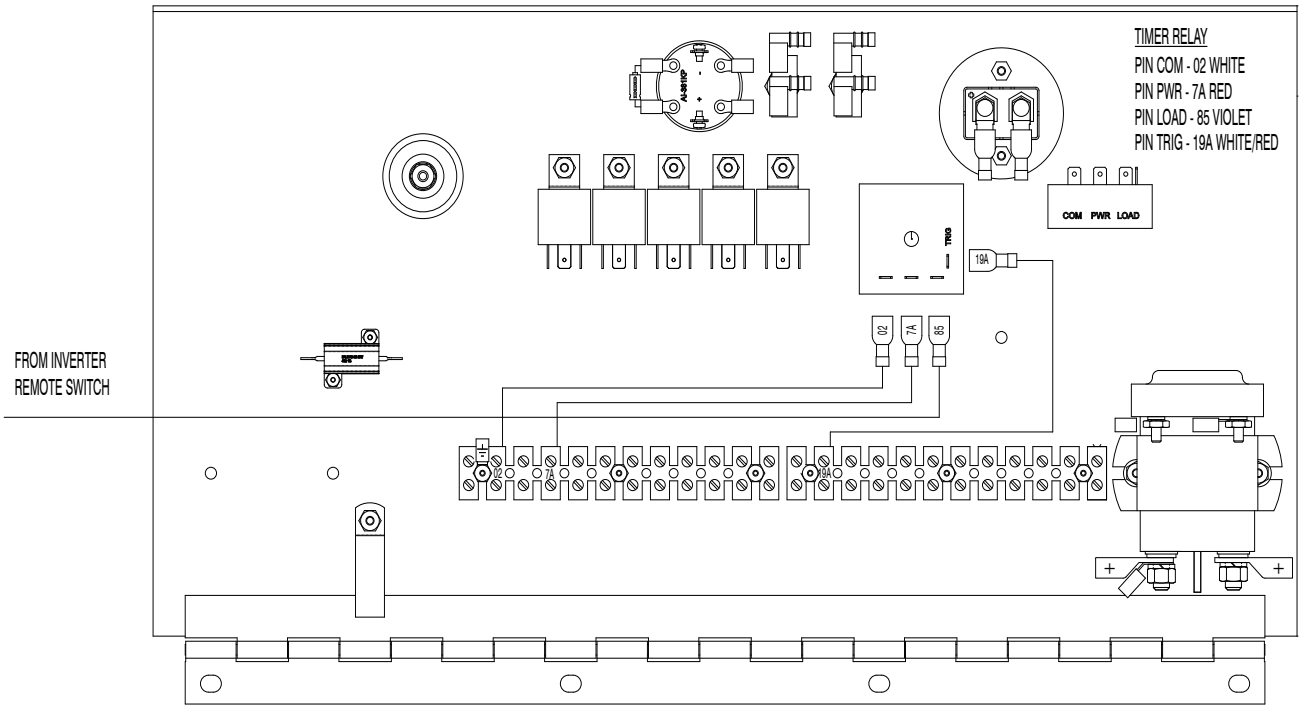

MM147370AD1 M149724AA

3.14 Electrical Harness - ZTR Telematics

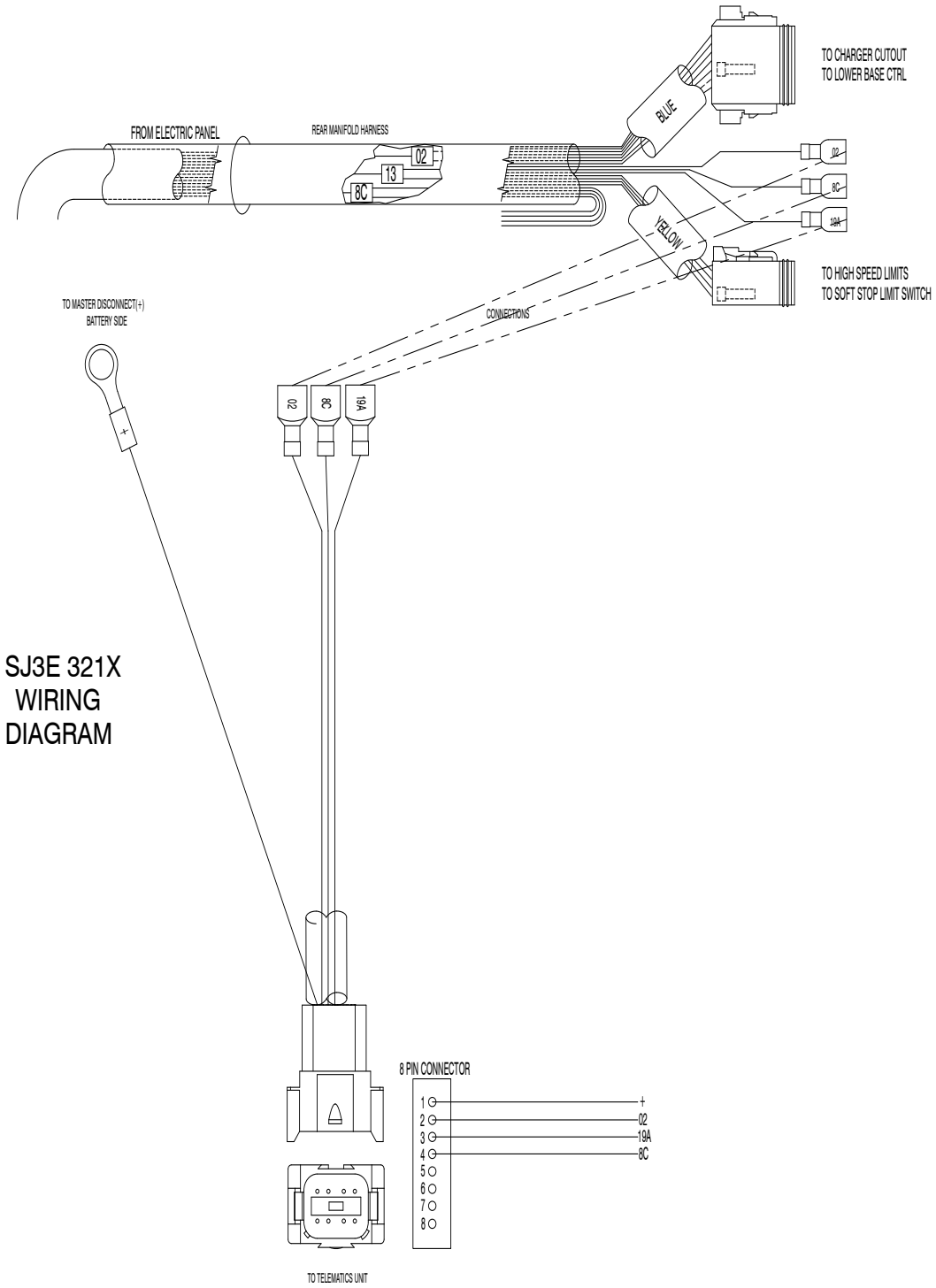

Notes

3.15 Hydraulic Schematic (Model 3215)

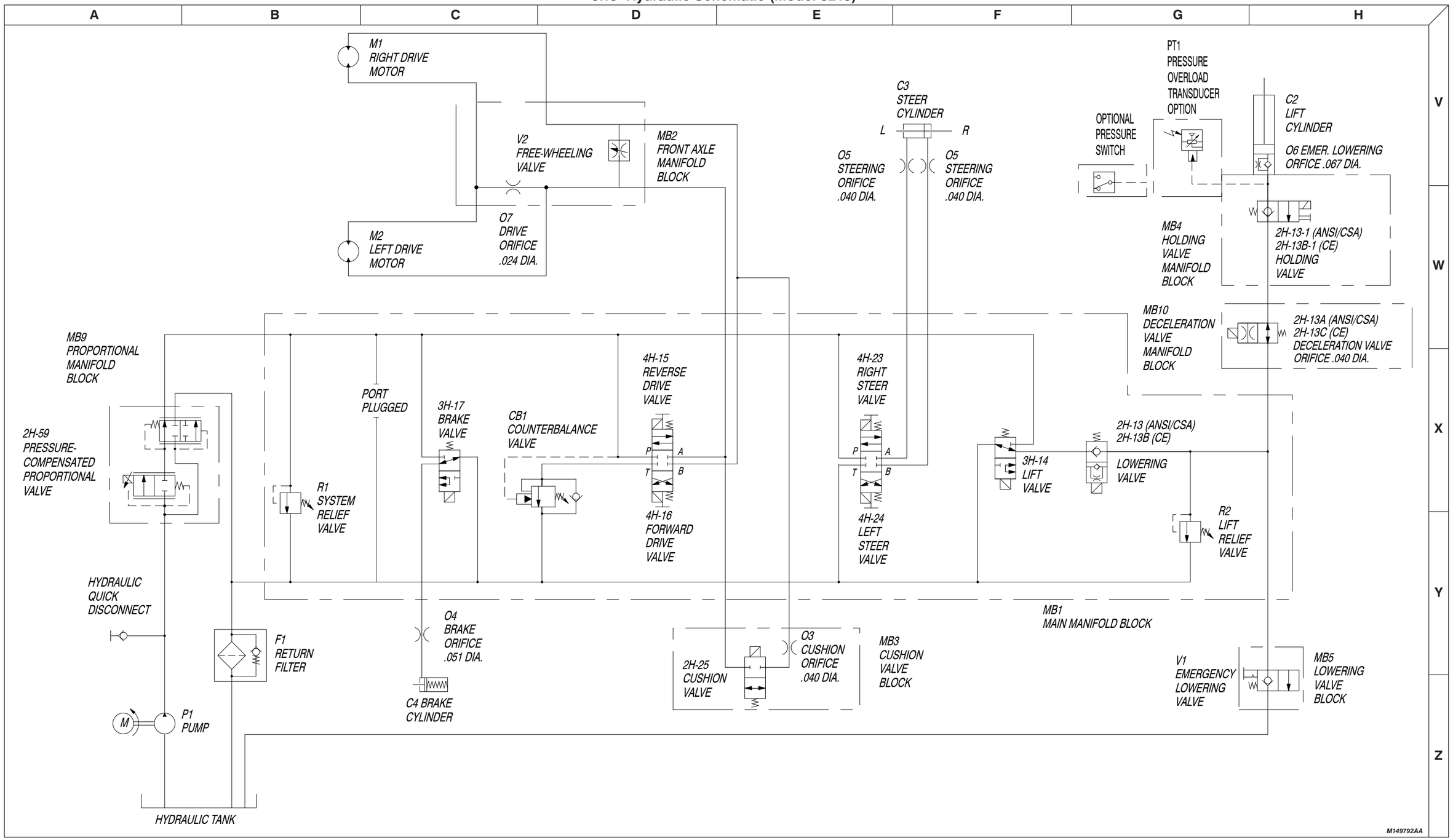

3.16 Hydraulic Schematic (Model 3219)

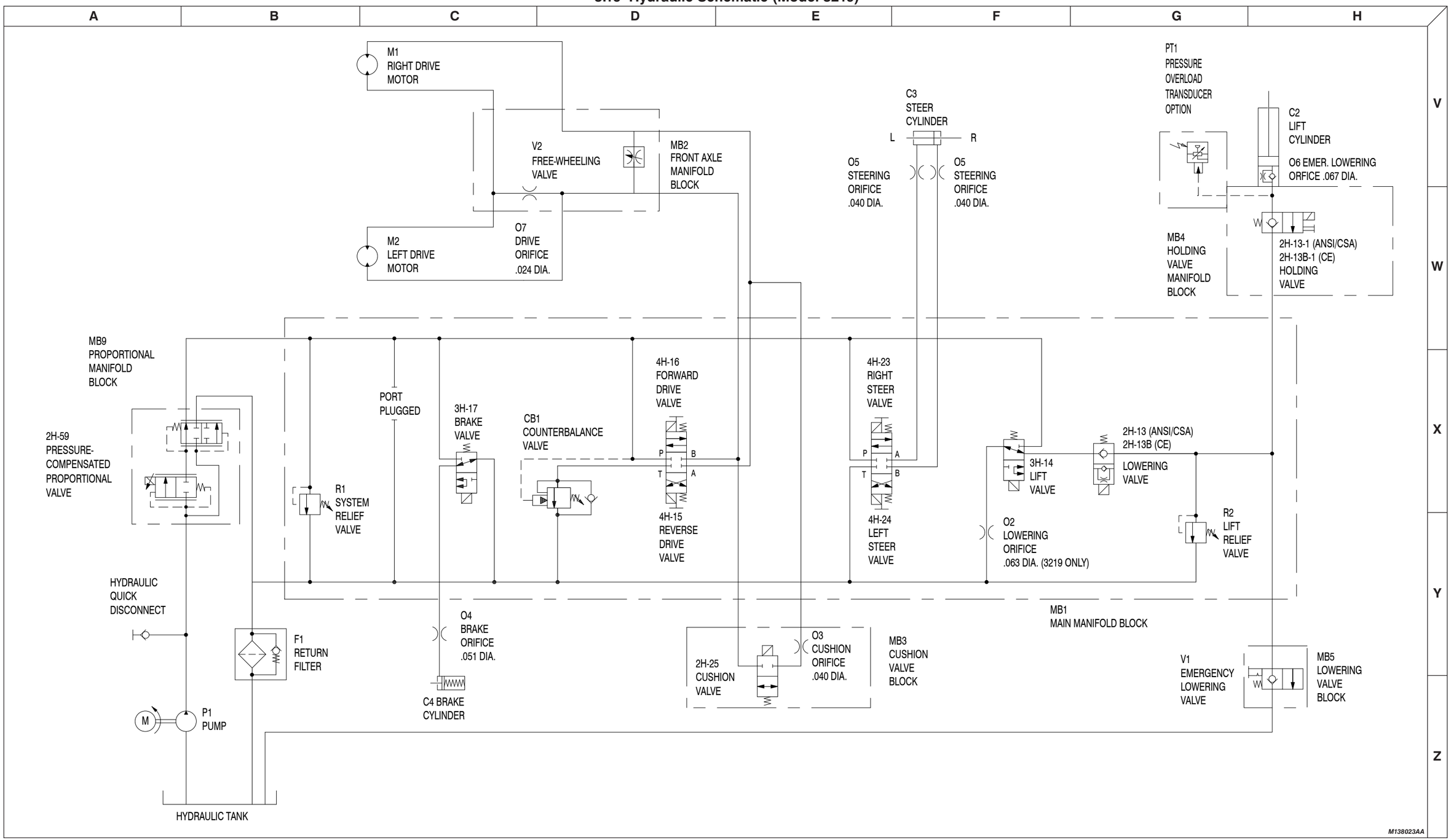

3.17 Main Manifold Harness and Holding Valve Harness

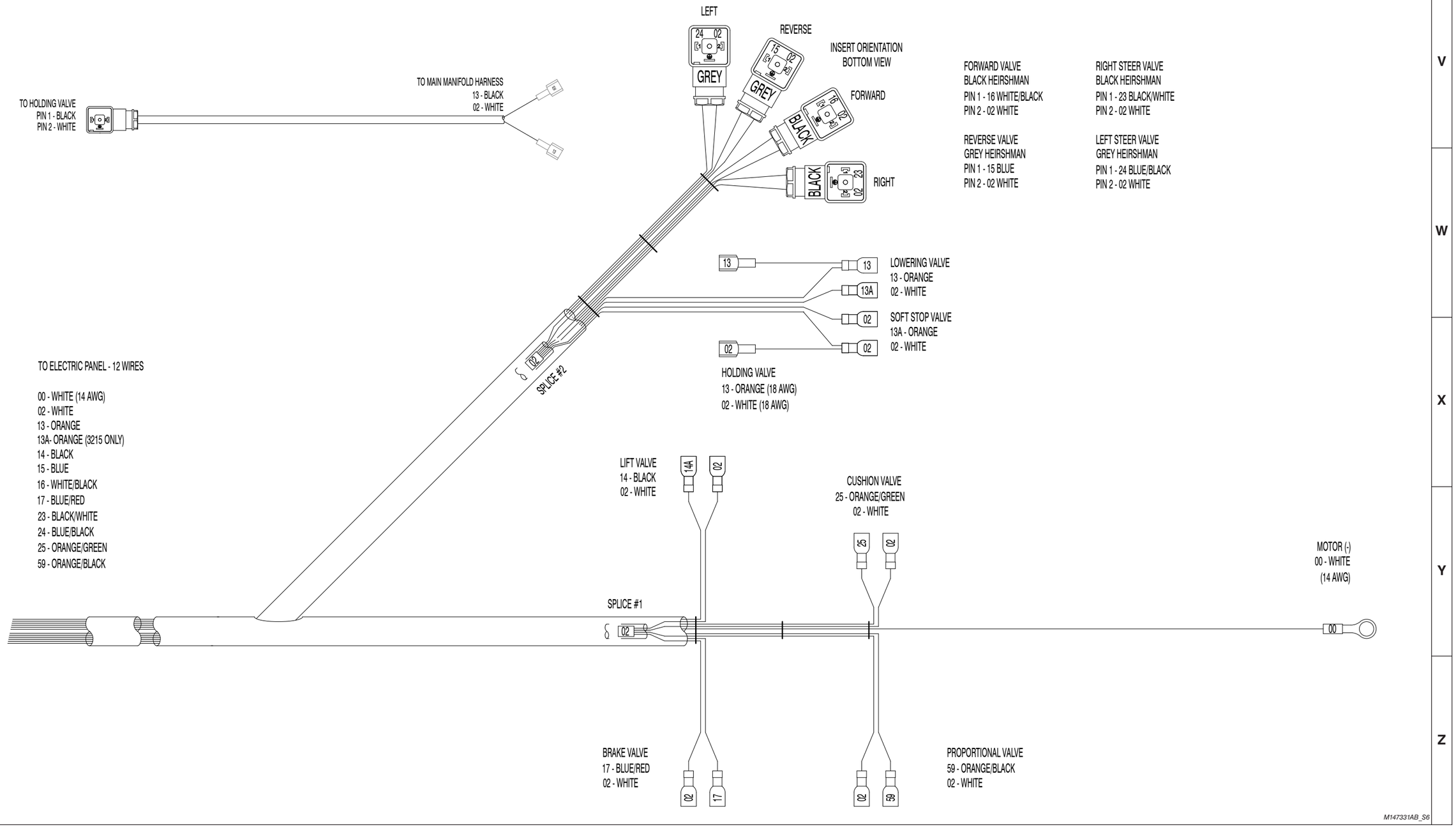

3.18 Main Manifold Harness and Holding Valve Harness (EE-Rated)

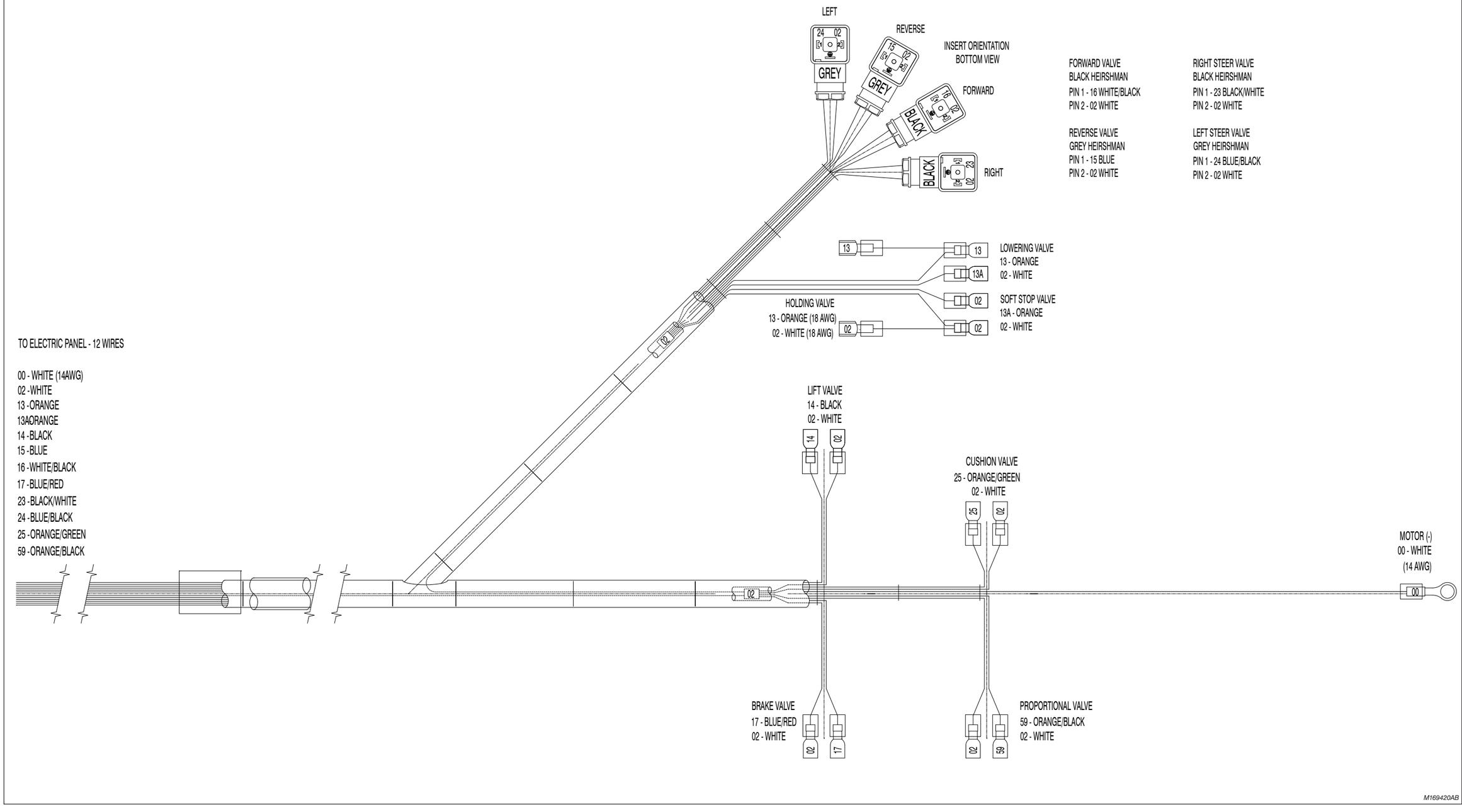

3.19 Elevate19 Telematics Harness

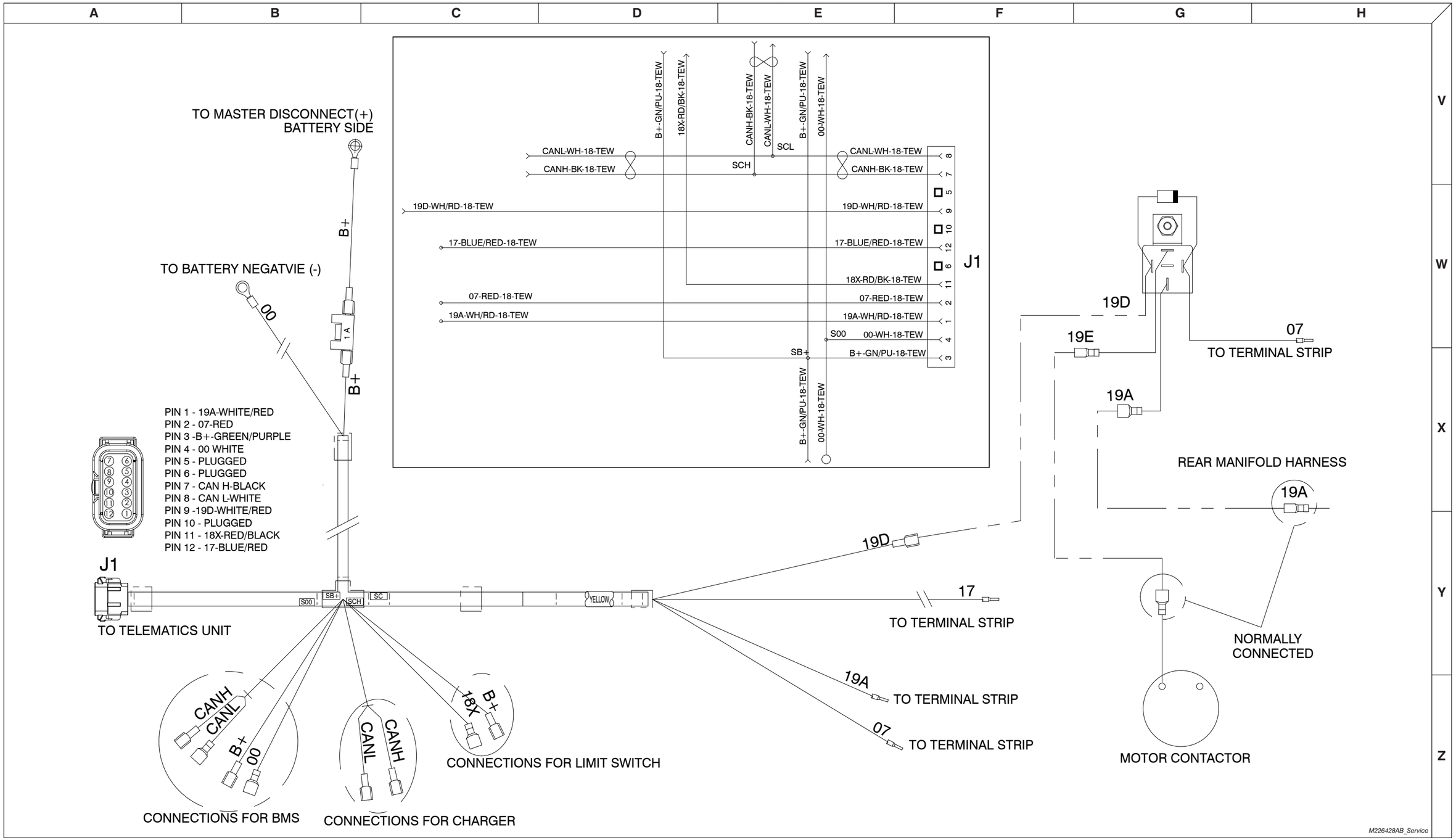

3.20a Electrical Panel Diagram

A	B	C	D	E	F	G	H

Serial Breakdown Reference Chart	
Model	**Serial Number**
SJIII 3215	10000837 & below
SJIII 3219	22036593 & below

LEGEND:

- TO JOYSTICK BOX
- TO TERMINAL BLOCK
- TO ENGINE
- TO MAIN MANIFOLD
- TO REAR MANIFOLD
- TO OUTRIGGER SOLENOID CABLES
- TO FLASHER
- TO LOWER KEYSWITCH BOX
- TO TILT SWITCH
- TO BATTERY
- TO HIGH SPEED LIMIT SWITCH
- TO POWER DECK
- TO END OF STROKE
- TO HORN/FLASHING LIGHT

CONTROL CABLE OPTIONS		
	EUROPE	N.A
WIRE COLOUR	WIRE NUMBER	WIRE NUMBER
GREEN/BLACK	21B	21B
RED/WHITE	60	7A

BACK VIEW

FRONT VIEW

FEMALE

(7A) RED WHITE (N/U) — 16 — 8 — GREEN (7A)
(23) BLACK WHITE — 15 — 7 — GREEN WHITE (49)
(24) BLUE BLACK — 14 — 6 — BLUE WHITE (6C)
(21B) GREEN BLACK (N/U) — 13 — 5 — RED (07)
(59) ORANGE BLACK — 12 — 4 — BLACK (14)
(18) RED BLACK (N/U) — 11 — 3 — ORANGE (13)
(16) WHITE BLACK — 10 — 2 — BLUE (15)
(NOT USED) — 9 — 1 — WHITE (02)

BACK VIEW

1 2 3 4 / DEUTSCH / 8 7 6 5

PIN 1 - 07 (RED)
PIN 2 - 3A (BLUE)
PIN 3 - 13 (ORANGE)
PIN 4 - 14E (BLACK)

PIN 5 - 10E (BLUE/WHITE)
PIN 6 - 8C (WHITE/BLACK)
PIN 7 - 7A (GREEN)
PIN 8 - 02 (WHITE)

TO CHARGER CUTOUT
TO LOWER BASE CTRL

PIN 1 - 17A (BLUE/BLACK)
PIN 2 - 21 (GREEN/BLACK)
PIN 3 - 19 (ORANGE/BLACK)
PIN 4 - 19A (RED/WHITE)

PIN 5 - 13 (ORANGE)
PIN 6 - 13A (GREEN/WHITE)
PIN 7 - 19 (ORANGE/BLACK)
PIN 8 - 71 (BLACK/WHITE)

TO HIGH SPEED LIMITS
TO POTHOLE LIMIT
TO SOFT STOP LIMIT SWITCH

21ACR
PROPORTIONAL RELAY
PIN 30 - 59A
PIN 85 - 02
PIN 86 - 21A
PIN 87 - N/U
PIN 87a - 59

17CR1
TRANSFER RELAY
PIN 30 - 7A
PIN 85 - 02
PIN 86 - 17
PIN 87 - 17C
PIN 87a - 17D

17CCR
CUSHION RELAY
PIN 30 - 17D
PIN 85 - 02
PIN 86 - 17C
PIN 87 - 25
PIN 87a - N/U

28CR
TILT SWITCH RELAY
PIN 30 - 19
PIN 85 - 02
PIN 86 - 28
PIN 87 - 19A
PIN 87a - 28A

17CR
STEER RELAY
PIN 30 - 59D
PIN 85 - 02
PIN 86 - 17
PIN 87 - N/U
PIN 87a - 59

07 - TO INVERTER TIMER IF EQUIPPED OTHERWISE TIE BACK

22 AND 29 - TO FLASHER IF EQUIPPED OTHERWISE TIE BACK

BATTERY TRAY
72 - BLACK/WHITE
71 - BLACK

HYDRAULIC TRAY
72 - BLACK/WHITE
19 - BLACK

TO MAIN MANIFOLD

MAIN MANIFOLD

PLATFORM CONTROL BOX

REAR HARNESS

TILT SWITCH

HORN/FLASHING LIGHT

TO TILT SWITCH
PIN 1 - 19 (BLACK)
PIN 2 - 28 (GREEN)
PIN 3 - 02 (WHITE)
PIN 4 - N/U

TO FLASHING LIGHT
02 - WHITE
22 - GREEN

TO HORN
02 - WHITE
49 - BLACK

TO MAIN DISCONNECT SWITCH

TO (+) AT MOTOR

M149649AA3

3.20b Electrical Panel Diagram

A	B	C	D	E	F	G	H

Serial Breakdown Reference Chart	
Model	**Serial Number**
SJIII 3215	10000838 to 10001533
SJIII 3219	22036594 & 22093185

LEGEND:
- TO JOYSTICK BOX
- TO TERMINAL BLOCK
- TO ENGINE
- TO MAIN MANIFOLD
- TO REAR MANIFOLD
- TO OUTRIGGER SOLENOID CABLES
- TO FLASHER
- TO LOWER KEYSWITCH BOX
- TO TILT SWITCH
- TO BATTERY
- TO HIGH SPEED LIMIT SWITCH
- TO POWER DECK
- TO END OF STROKE
- TO HORN/FLASHING LIGHT

BACK VIEW

PIN 1 - 07 (RED)
PIN 2 - 3A (BLUE)
PIN 3 - 13 (ORANGE)
PIN 4 - 14E (BLACK)
PIN 5 - N/U
PIN 6 - 8C (WHITE/BLACK)
PIN 7 - 7A (GREEN)
PIN 8 - 02 (WHITE)

02 - WHITE
8C - WHITE/BLACK
19A - RED/WHITE

PIN 1 - 71 (BLUE/BLACK)
PIN 2 - 21 (GREEN/BLACK)
PIN 3 - 13 (ORANGE)
PIN 4 - 13A (GREEN/WHITE)

TO CHARGER CUTOUT
TO LOWER BASE CTRL

TO HIGH SPEED LIMITS
TO SOFT STOP LIMIT SWITCH

BLUE
YELLOW

TIED BACK:
- RED/BLACK
- BLUE/WHITE
- ORANGE/BLACK
- BLACK/WHITE

MAIN MANIFOLD
00 - WHITE
02 - WHITE
13 - ORANGE
13A - ORANGE
14 - BLACK
15 - BLUE
16 - WHITE/BLACK
17 - BLUE/RED
23 - BLACK/WHITE
24 - BLUE/BLACK
25 - ORANGE/GREEN
59 - ORANGE/BLACK

BATTERY TRAY
72 - BLACK/WHITE
71 - BLACK

HYDRAULIC TRAY
72 - BLACK/WHITE
19 - BLACK

21ACR
PROPORTIONAL RELAY
PIN 30 - 59A
PIN 85 - 02
PIN 86 - 21A
PIN 87 - N/U
PIN 87a - 59

17CR1
TRANSFER RELAY
PIN 30 - 7A
PIN 85 - 02
PIN 86 - 17
PIN 87 - 17C
PIN 87a - 17D

17CCR
CUSHION RELAY
PIN 30 - 17D
PIN 85 - 02
PIN 86 - 17C
PIN 87 - 25
PIN 87a - N/U

28CR
TILT SWITCH RELAY
PIN 30 - 19
PIN 85 - 02
PIN 86 - 28
PIN 87 - 19A
PIN 87a - 28A

17CR
STEER RELAY
PIN 30 - 59D
PIN 85 - 02
PIN 86 - 17
PIN 87 - N/U
PIN 87a - 59

22 AND 29 - TO FLASHER IF EQUIPPED OTHERWISE TIEBACK

TO MAIN MANIFOLD
REAR HARNESS
TILT SWITCH
HORN/FLASHING LIGHT
MAIN MANIFOLD
PLATFORM CONTROL BOX
TO MAIN DISCONNECT SWITCH
TO (+) AT MOTOR

BACK VIEW
FRONT VIEW
FEMALE

(7A) RED WHITE (N/U)	16	GREEN (7A)
(23) BLACK WHITE	15	GREEN WHITE (49)
(24) BLUE BLACK	14	BLUE WHITE (8C)
(21E) GREEN BLACK (N/U)	13	RED (07)
(59) ORANGE BLACK	12	BLACK (14)
(18) RED BLACK (N/U)	11	ORANGE (13)
(16) WHITE BLACK	10	BLUE (15)
(NOT USED)	9	WHITE (02)

TO TILT SWITCH
PIN 1 - 19 (BLACK)
PIN 2 - 28 (GREEN)
PIN 3 - 02 (WHITE)
PIN 4 - N/U

TO FLASHING LIGHT
02 - WHITE
22 - GREEN

TO HORN
02 - WHITE
49 - BLACK

M159380AE1

3.20c Electrical Panel Diagram

Serial Breakdown Reference Chart	
Model	**Serial Number**
SJIII 3215	10001534 & above
SJIII 3219	22093186 & above

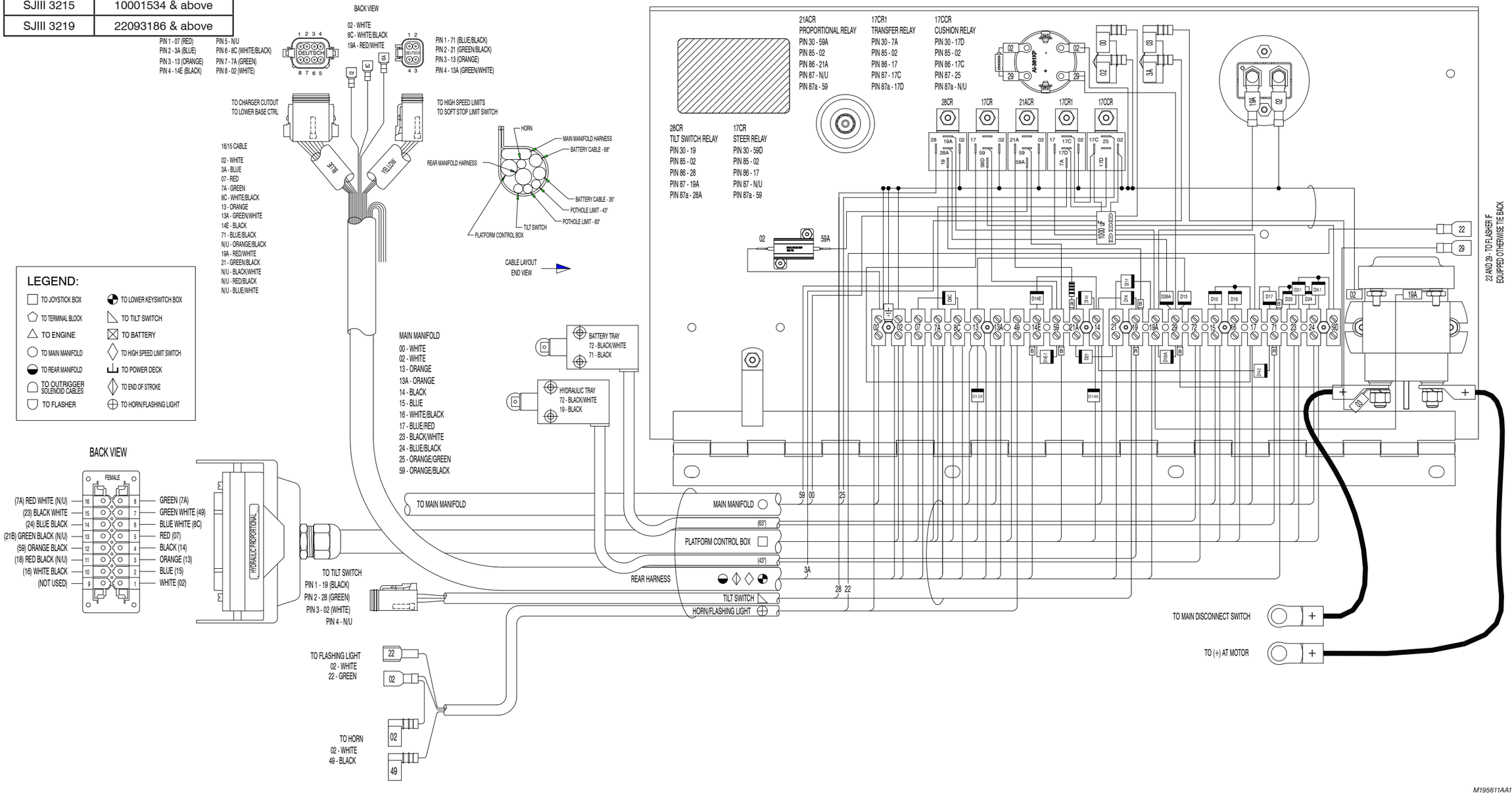

3.21a Electrical Panel Diagram (EE Rated)

A	B	C	D	E	F	G	H

Serial Breakdown Reference Chart	
Model	**Serial Number**
SJIII 3215	10000837 & below
SJIII 3219	22036593 & below

BACK VIEW

PIN 1 - 07 (RED)
PIN 2 - 3A (BLUE)
PIN 3 - 13 (ORANGE)
PIN 4 - 14E (BLACK)
PIN 5 - N/U
PIN 6 - 8C (WHITE/BLACK)
PIN 7 - 7A (GREEN)
PIN 8 - 02 (WHITE)

PIN 1 - 17A (BLUE/BLACK)
PIN 2 - 21 (GREEN/BLACK)
PIN 3 - 19 (ORANGE/BLACK)
PIN 4 - 19A (RED/WHITE)
PIN 5 - 13 (ORANGE)
PIN 6 - 13A (GREEN/WHITE)
PIN 7 - 19 (ORANGE/BLACK)
PIN 8 - 71 (BLACK/WHITE)

TO CHARGER CUTOUT
TO LOWER BASE CTRL

TO HIGH SPEED LIMITS
TO POTHOLE LIMIT
TO SOFT STOP LIMIT SWITCH

TO BATTERIES

TO MOTOR

MAIN DISCONNECT

LEGEND:
- TO JOYSTICK BOX
- TO TERMINAL BLOCK
- TO ENGINE
- TO MAIN MANIFOLD
- TO REAR MANIFOLD
- TO OUTRIGGER SOLENOID CABLES
- TO FLASHER
- TO LOWER KEYSWITCH BOX
- TO TILT SWITCH
- TO BATTERY
- TO HIGH SPEED LIMIT SWITCH
- TO POWER DECK
- TO END OF STROKE
- TO HORN/FLASHING LIGHT

28CR
TILT SWITCH RELAY
PIN 30 - 19
PIN 85 - 02
PIN 86 - 28
PIN 87 - 19A
PIN 87a - 28A

17CR
STEER RELAY
PIN 30 - 59D
PIN 85 - 02
PIN 86 - 17
PIN 87 - N/U
PIN 87a - 59

21ACR
PROPORTIONAL RELAY
PIN 30 - 59A
PIN 85 - 02
PIN 86 - 21A
PIN 87 - N/U
PIN 87a - 59

17CR1
TRANSFER RELAY
PIN 30 - 7A
PIN 85 - 02
PIN 86 - 17
PIN 87 - 17C
PIN 87a - 17D

17CCR
CUSHION RELAY
PIN 30 - 17D
PIN 85 - 02
PIN 86 - 17C
PIN 87 - 25
PIN 87a - N/U

REAR HARNESS
MAIN MANIFOLD HARNESS WITH HOLDING VALVES
PLATFORM CONTROL BOX

TO TILT SWITCH
PIN 1 - 19 (BLACK)
PIN 2 - 28 (GREEN)
PIN 3 - 02 (WHITE)
PIN 4 - N/U

BATTERY TRAY
72 - BLACK/WHITE
71 - BLACK

HYDRAULIC TRAY
72 - BLACK/WHITE
19 - BLACK

TO FLASHING LIGHT
02 - WHITE
22 - GREEN

TO HORN
02 - WHITE
49 - BLACK

MAIN MANIFOLD
PLATFORM CONTROL BOX
REAR HARNESS
TILT SWITCH
HORN/FLASHING LIGHT

CONTROL CABLE OPTIONS		
	EUROPE	N.A
WIRE COLOUR	WIRE NUMBER	WIRE NUMBER
GREEN/BLACK	21B	21B
RED/WHITE	60	7A

FEMALE

BACK VIEW

M147957AA1

3.21b Electrical Panel Diagram (EE Rated)

A	B	C	D	E	F	G	H

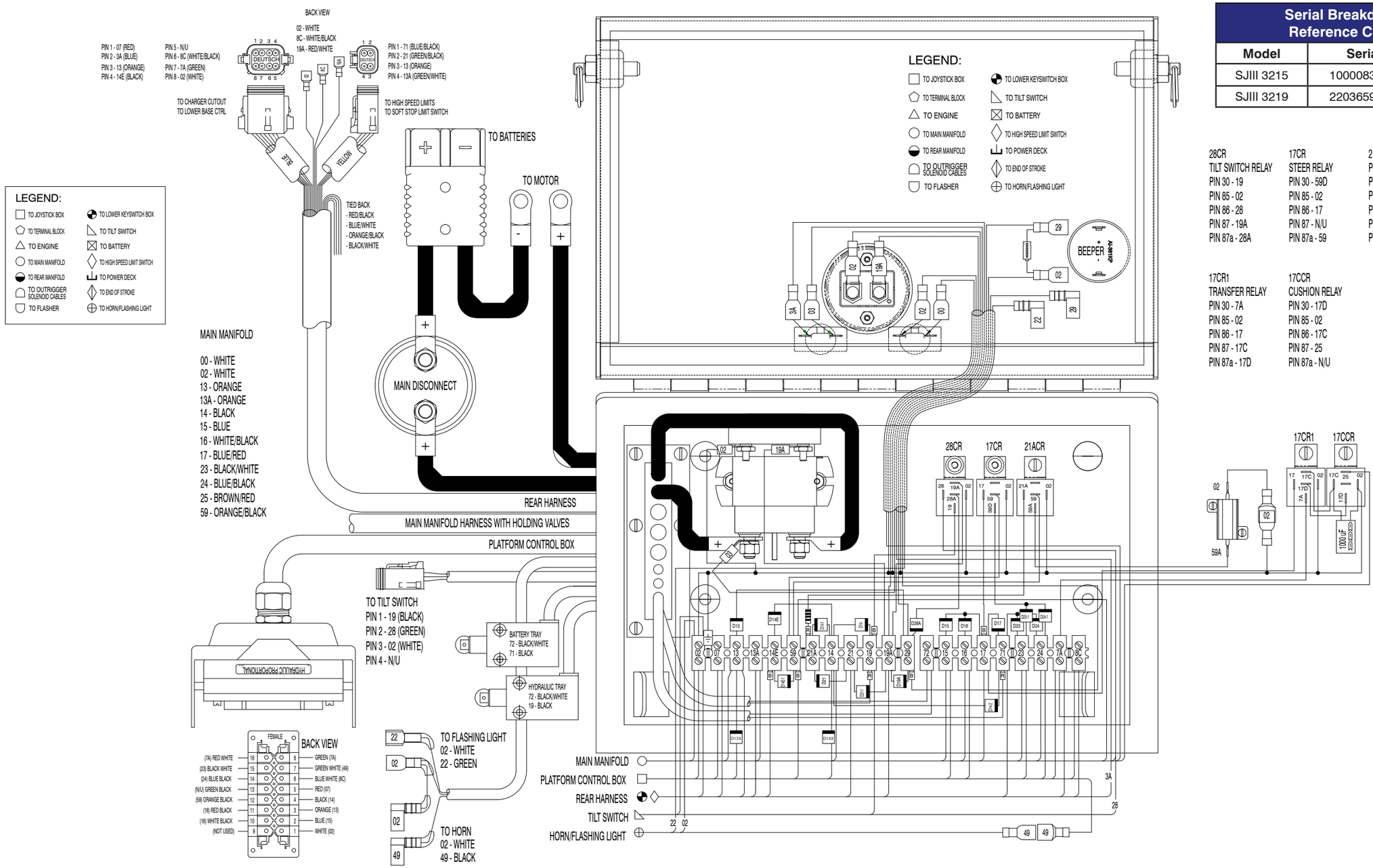

Serial Breakdown Reference Chart	
Model	**Serial Number**
SJIII 3215	10000838 & 10001533
SJIII 3219	22036594 & 22093342

28CR	17CR	21ACR
TILT SWITCH RELAY	STEER RELAY	PROPORTIONAL RELAY
PIN 30 - 19	PIN 30 - 59D	PIN 30 - 59A
PIN 85 - 02	PIN 85 - 02	PIN 85 - 02
PIN 86 - 28	PIN 86 - 17	PIN 86 - 21A
PIN 87 - 19A	PIN 87 - N/U	PIN 87 - N/U
PIN 87a - 28A	PIN 87a - 59	PIN 87a - 59

17CR1	17CCR
TRANSFER RELAY	CUSHION RELAY
PIN 30 - 7A	PIN 30 - 17D
PIN 85 - 02	PIN 85 - 02
PIN 86 - 17	PIN 86 - 17C
PIN 87 - 17C	PIN 87 - 25
PIN 87a - 17D	PIN 87a - N/U

M159382AF1

3.21c Electrical Panel Diagram (EE Rated)

Serial Breakdown Reference Chart	
Model	**Serial Number**
SJIII 3215	10001534 & Above
SJIII 3219	22093343 & Above

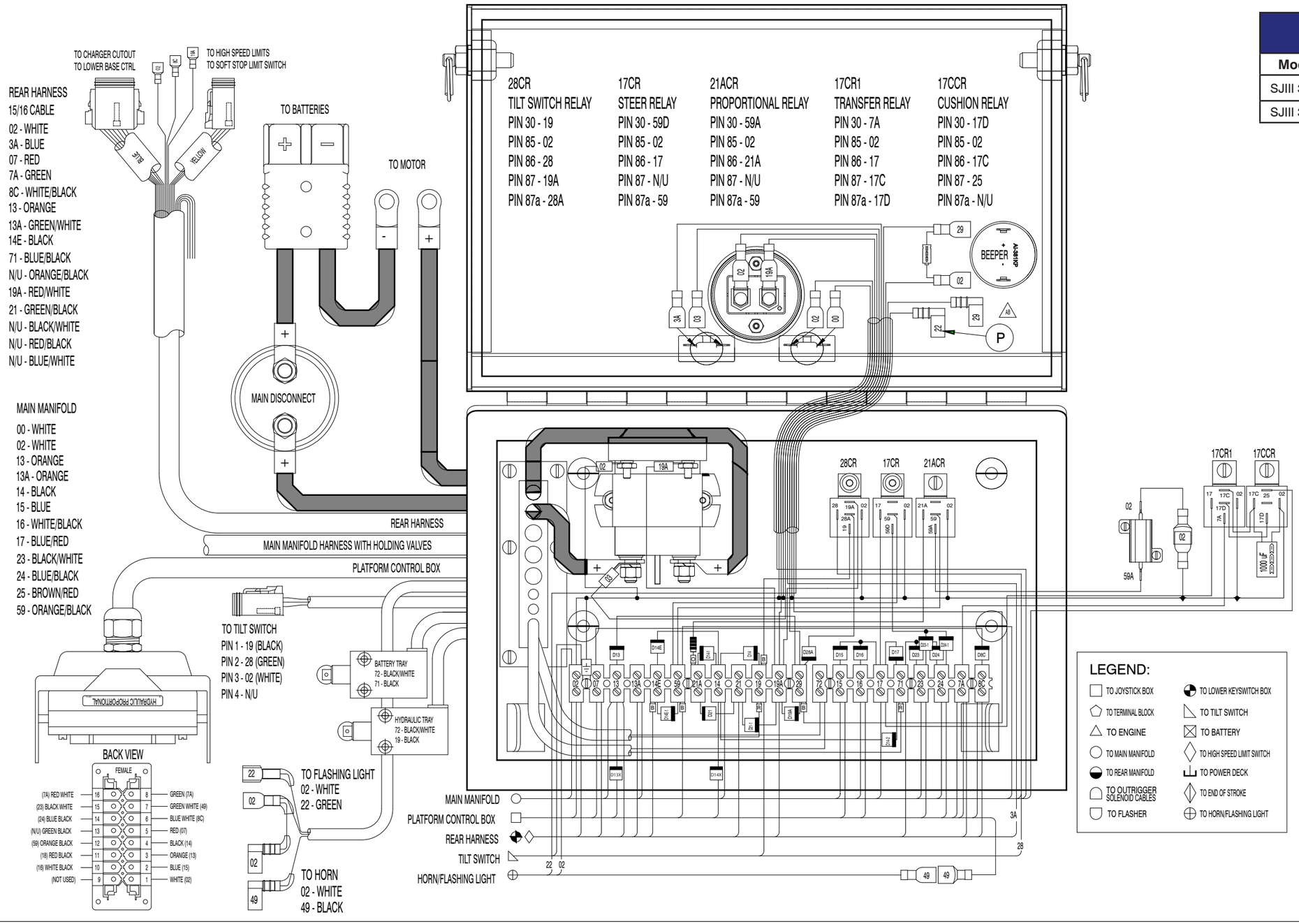

M199446AB1

A	B	C	D	E	F	G	H

Serial Breakdown Reference Chart	
Model	**Serial Number**
SJIII 3215	10001534 & above
SJIII 3219	22093186 & above

TIMER RELAY

PIN COM - 02 WHITE
PIN PWR - 7A RED
PIN LOAD - 85 VIOLET
PIN TRIG - 19A WHITE/RED

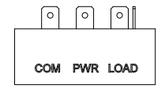

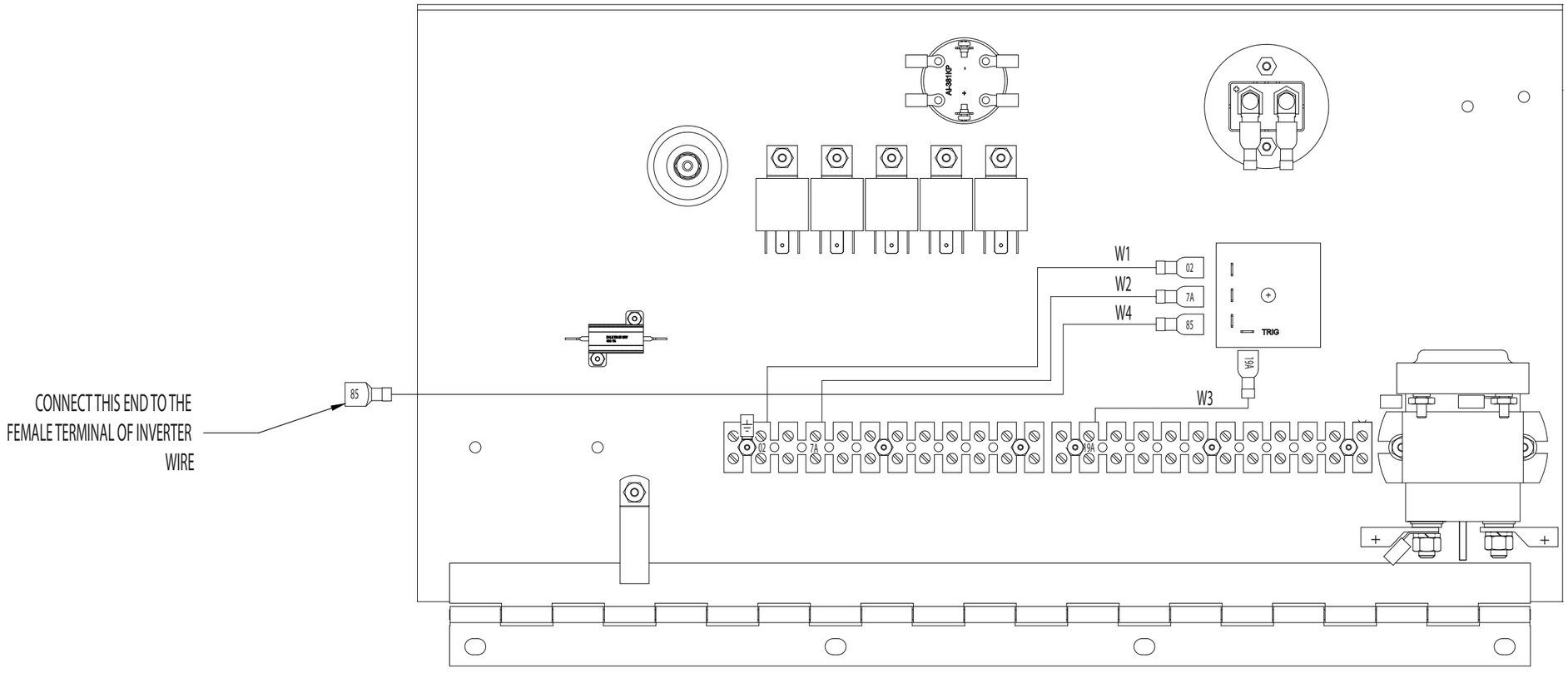

M195858AA-1

3.23 Horn/Tilt Switch/Flashing Light Diagram

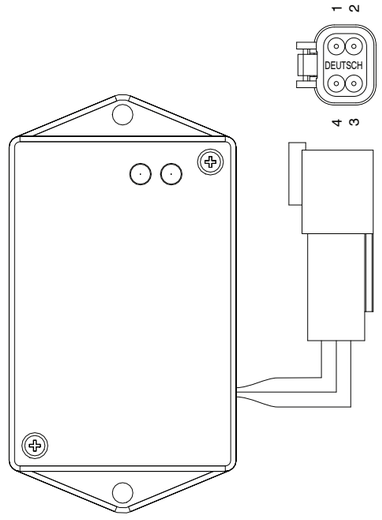

PIN 1 - 19 (RED)
PIN 2 - 28 (WHITE)
PIN 3 - 02 (BLACK)
PIN 4 - N/U

TS1
TILT SWITCH (ANSI/CSA)

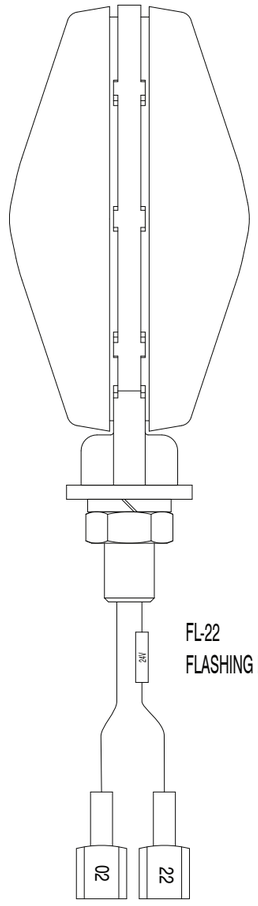

FL-22
FLASHING LIGHT

02 - WHITE
22 - GREEN

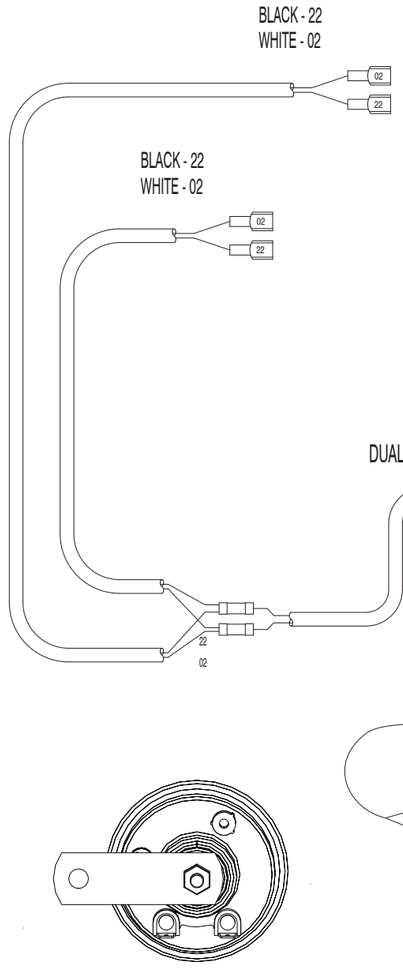

H1
HORN

M146648AA_S4D1

3.24a Electrical Schematic (Equipped with no options)

A	B	C	D	E	F	G	H

Serial Breakdown Reference Chart

Model	Serial Number
SJIII 3215	10000837 & below
SJIII 3219	22036593 & below

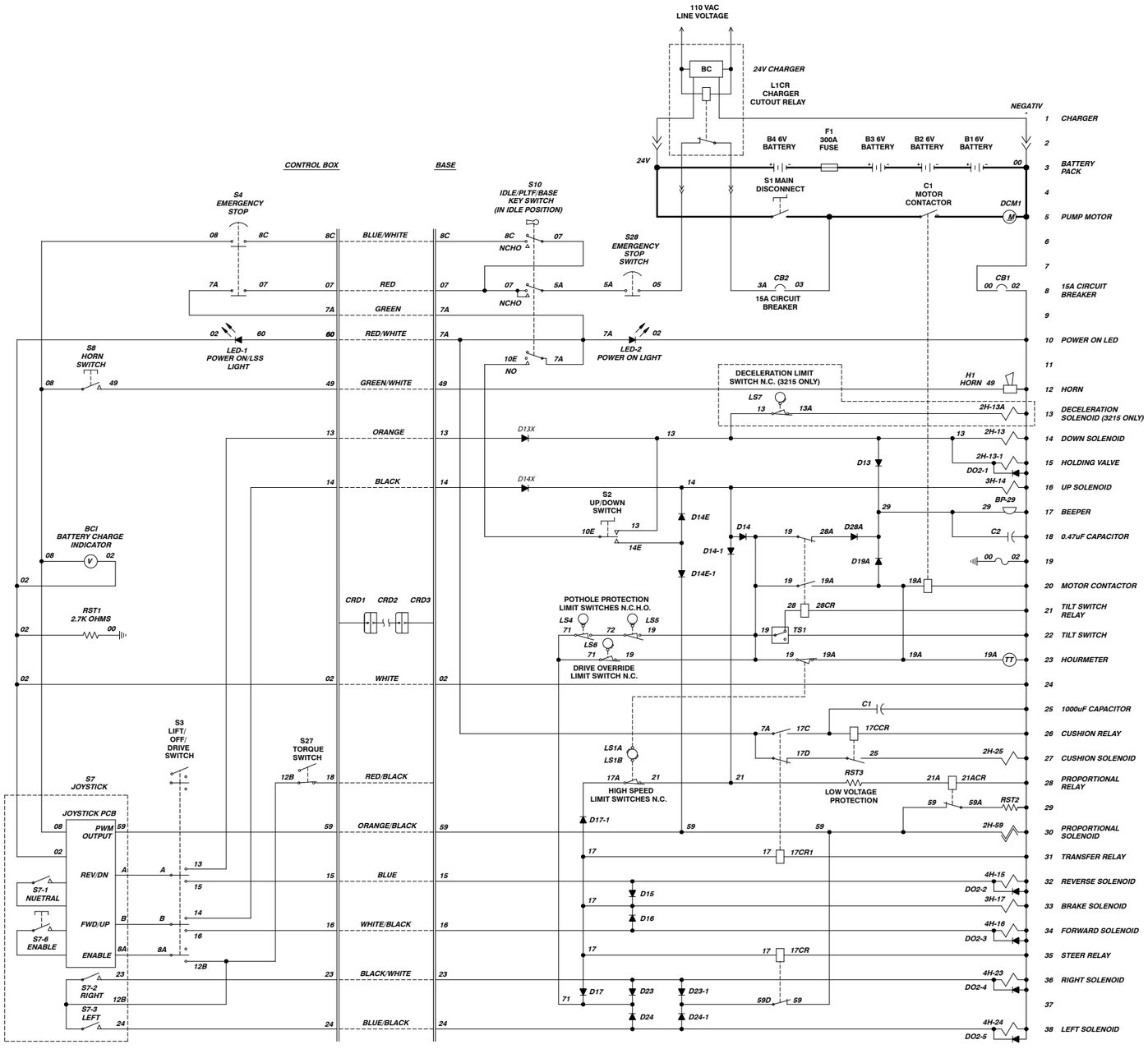

3.24b Electrical Schematic (Equipped with no options)

AG

A	B	C	D	E	F	G	H

Serial Breakdown Reference Chart	
Model	**Serial Number**
SJIII 3215	10000838 to 10001533
SJIII 3219	22036594 to 22093185

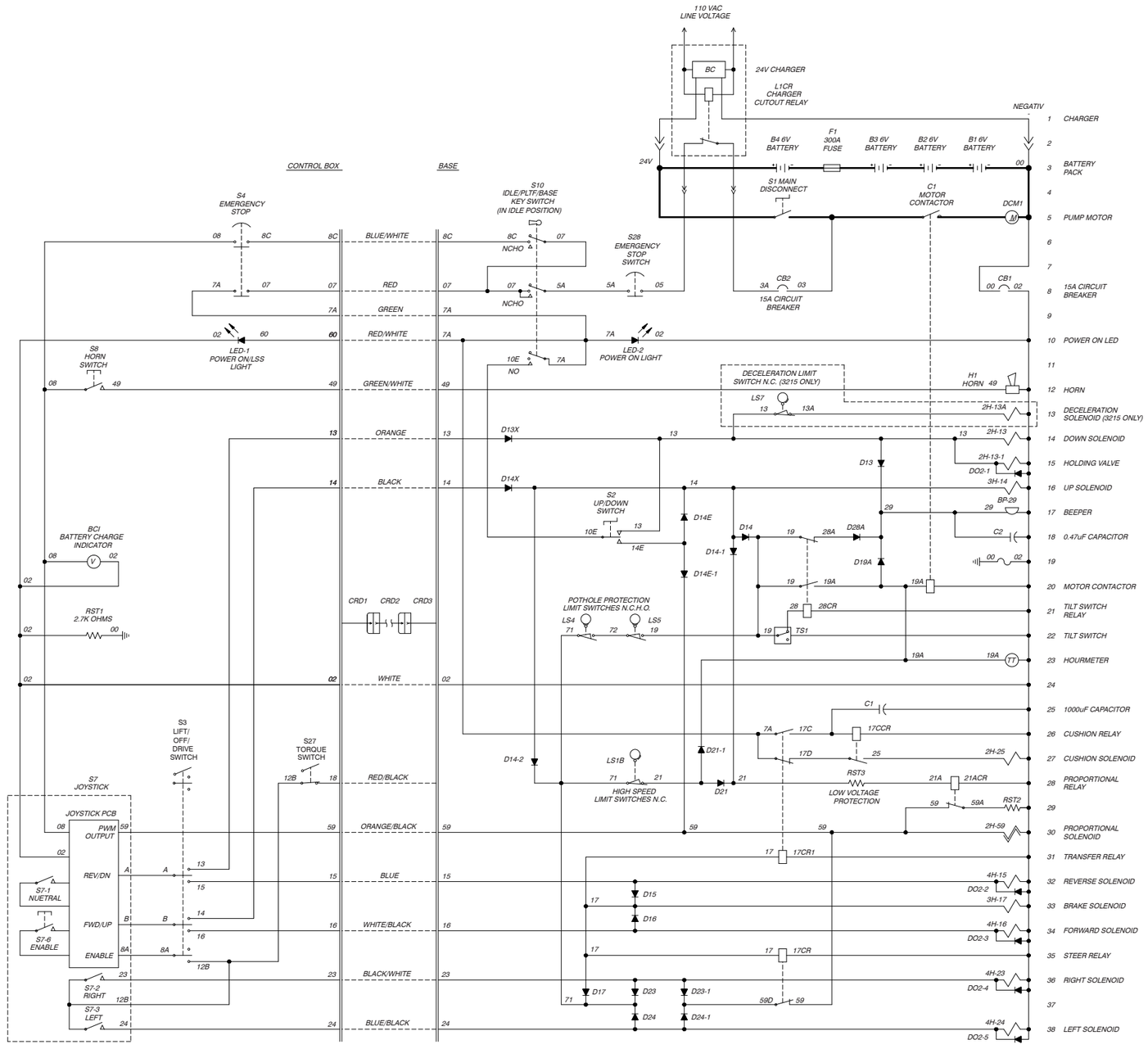

M159412AB1

V W X Y Z

3.24c Electrical Schematic (Equipped with no options)

Serial Breakdown Reference Chart	
Model	**Serial Number**
SJIII 3215	10001534 & above
SJIII 3219	22093186 & above

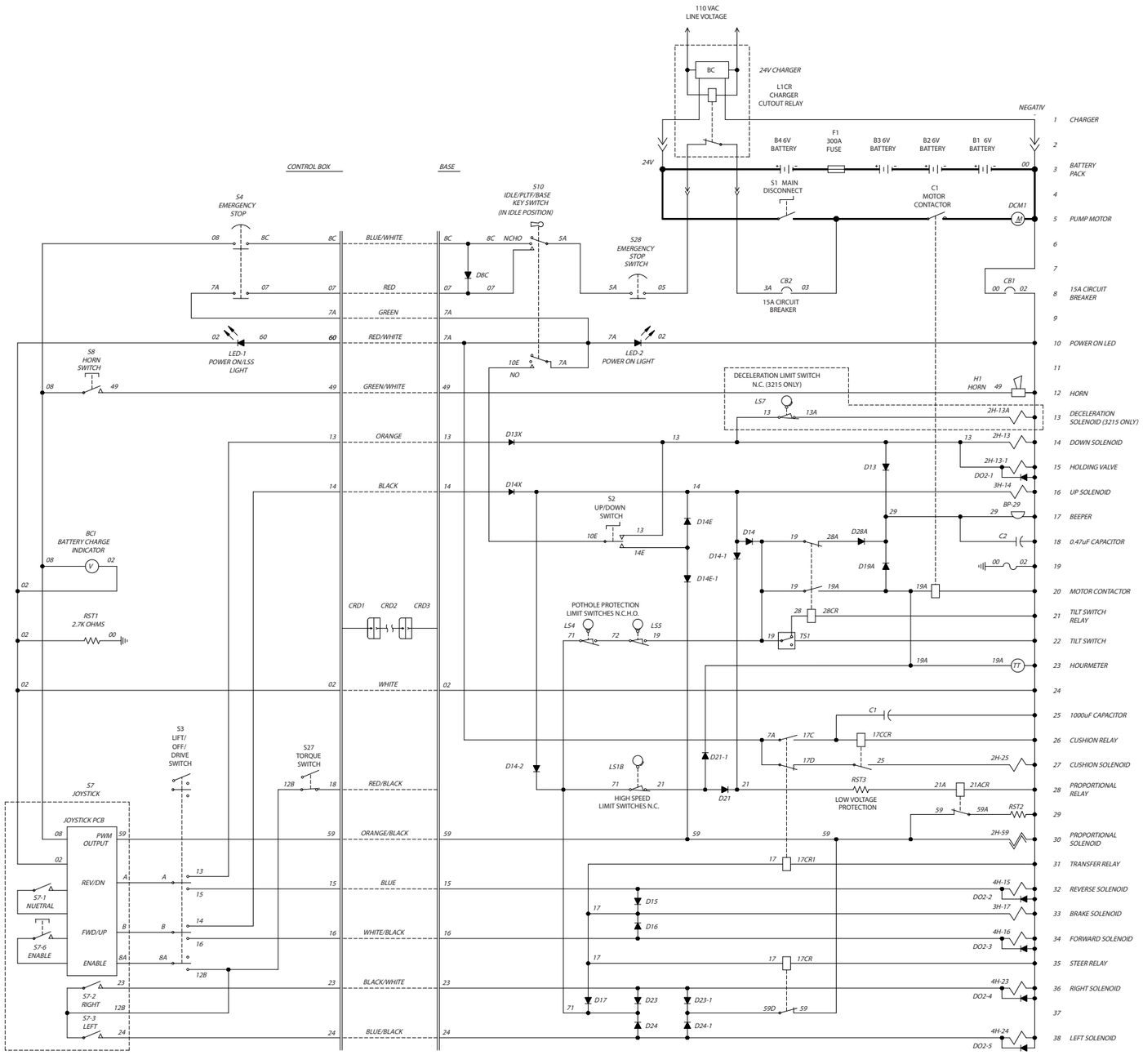

3.25a Electrical Schematic (ANSI/CSA - Equipped with All options)

AG

A	B	C	D	E	F	G	H

Serial Breakdown Reference Chart

Model	Serial Number
SJIII 3215	10000837 & below
SJIII 3219	22036593 & below

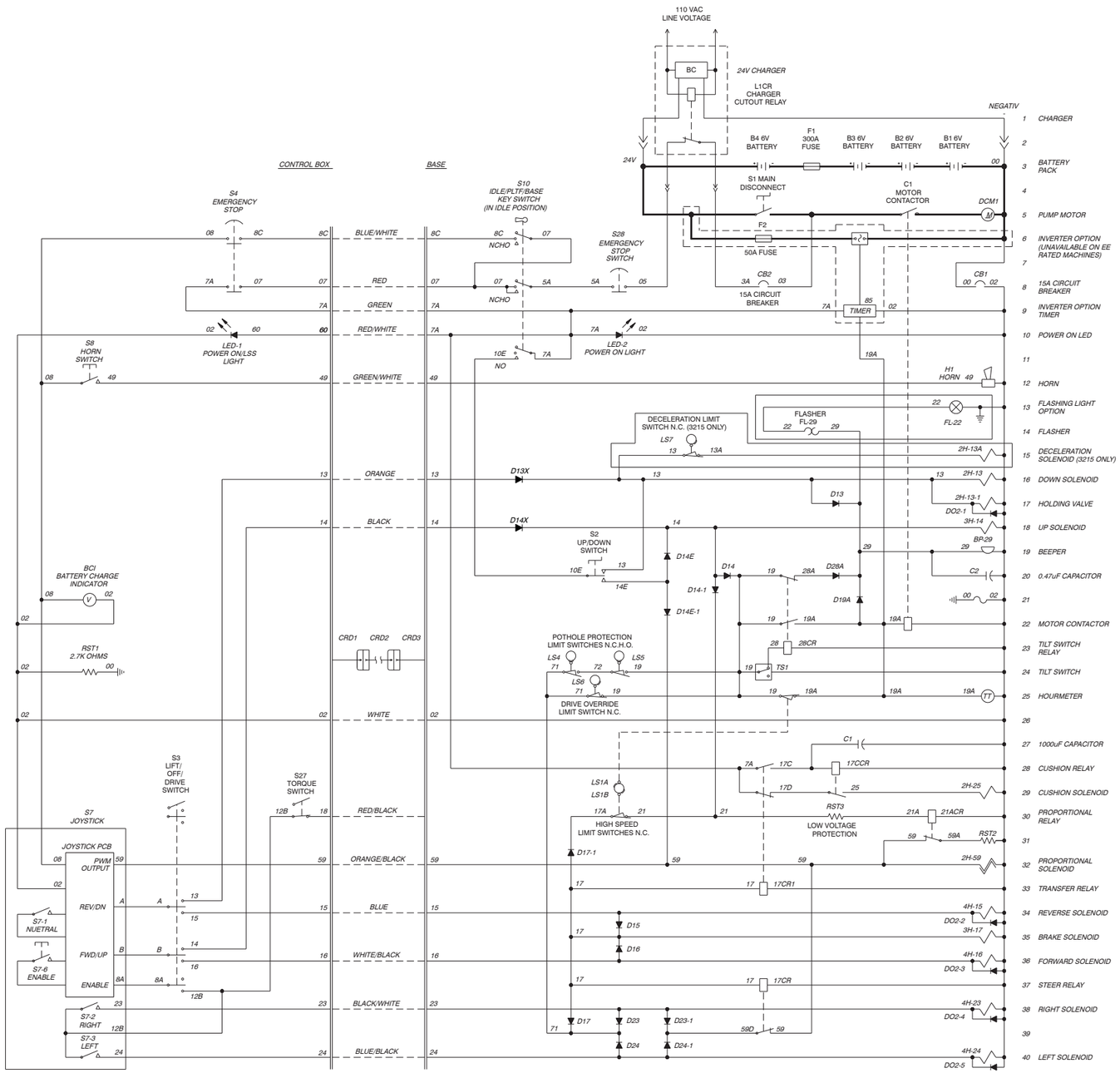

3.25b Electrical Schematic (ANSI/CSA - Equipped with All options)

A	B	C	D	E	F	G	H

Serial Breakdown Reference Chart	
Model	**Serial Number**
SJIII 3215	10000838 to 10001533
SJIII 3219	22036594 to 22093185

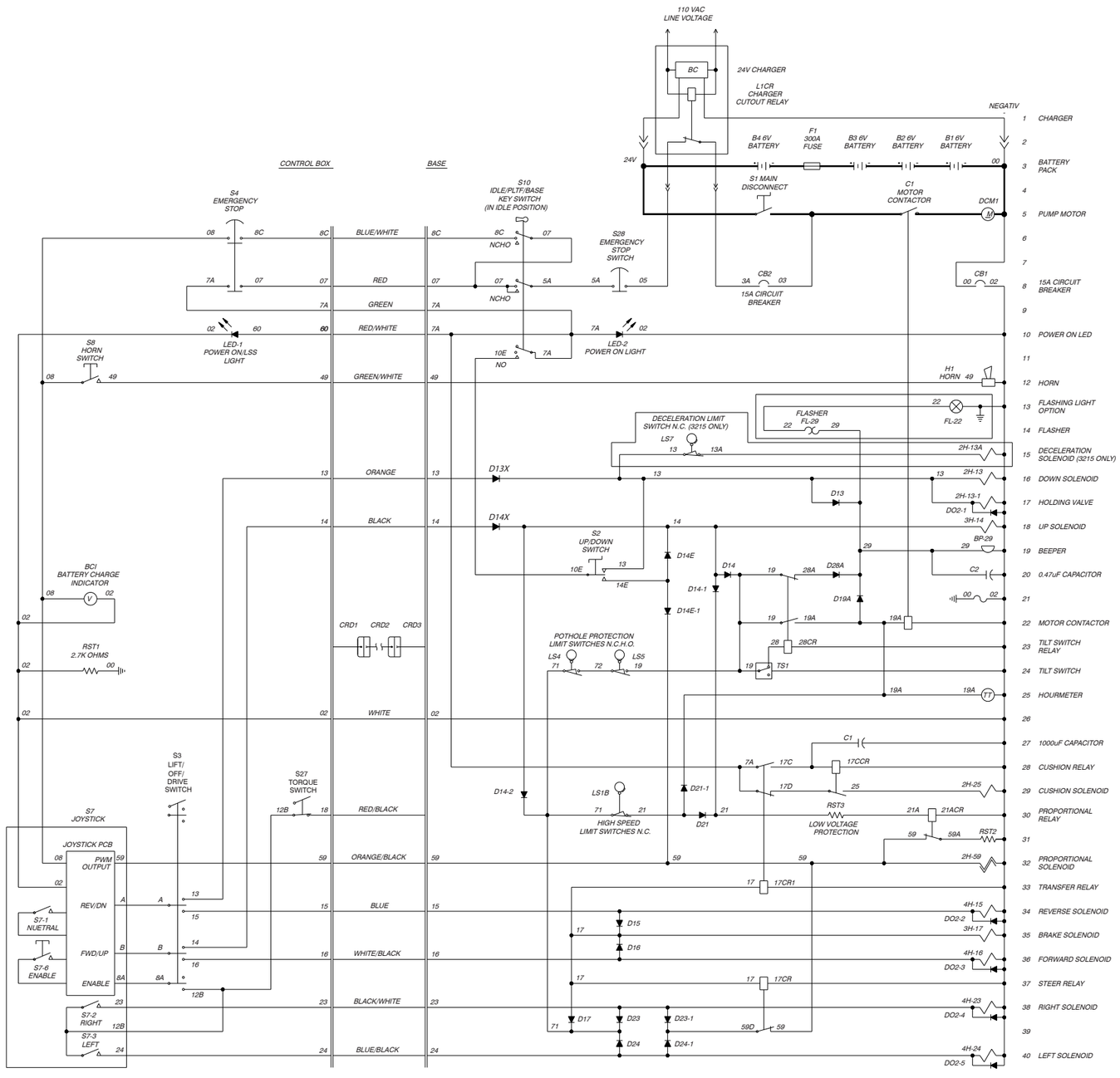

M159376AB1

V W X Y Z

Serial Breakdown Reference Chart	
Model	**Serial Number**
SJIII 3215	10001534 & above
SJIII 3219	22093186 & above

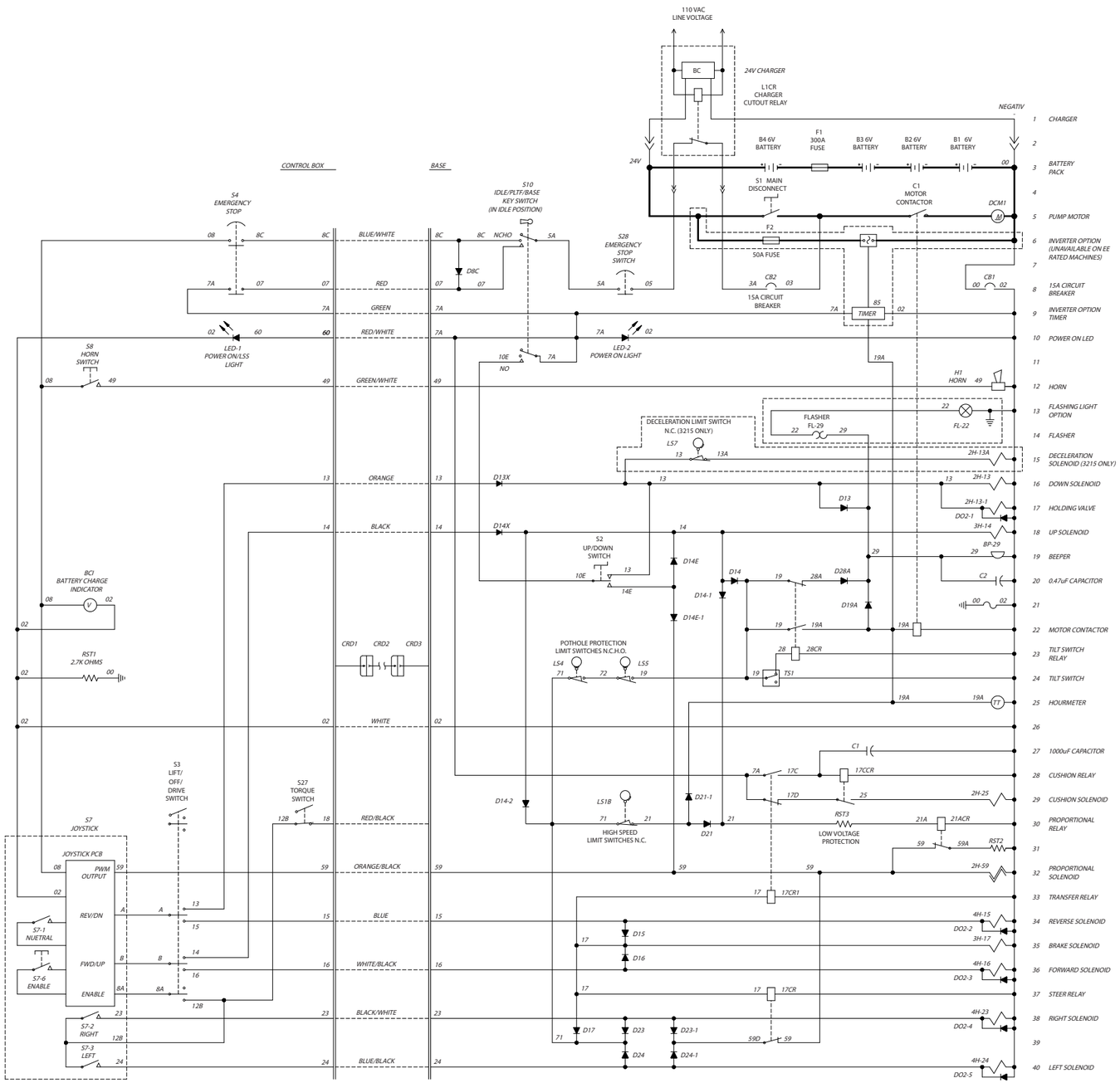

A	B	C	D	E	F	G	H

Serial Breakdown Reference Chart	
Model	**Serial Number**
SJIII 3215	10000837 & below
SJIII 3219	22036593 & below

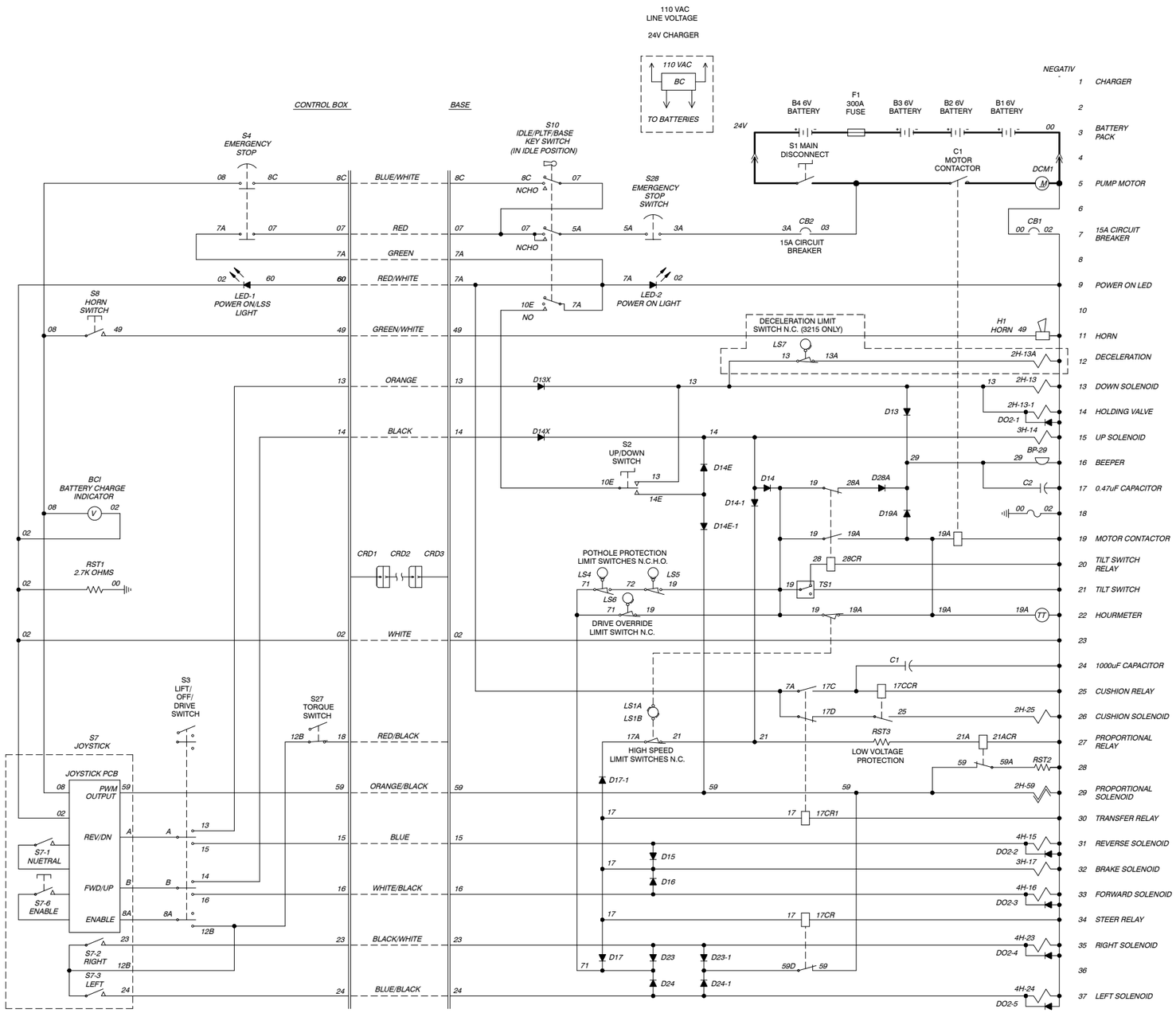

3.26b Electrical Schematic (EE Rated - Equipped with no options)

Serial Breakdown Reference Chart	
Model	**Serial Number**
SJIII 3215	10000838 to 10001533
SJIII 3219	22036594 to 22093342

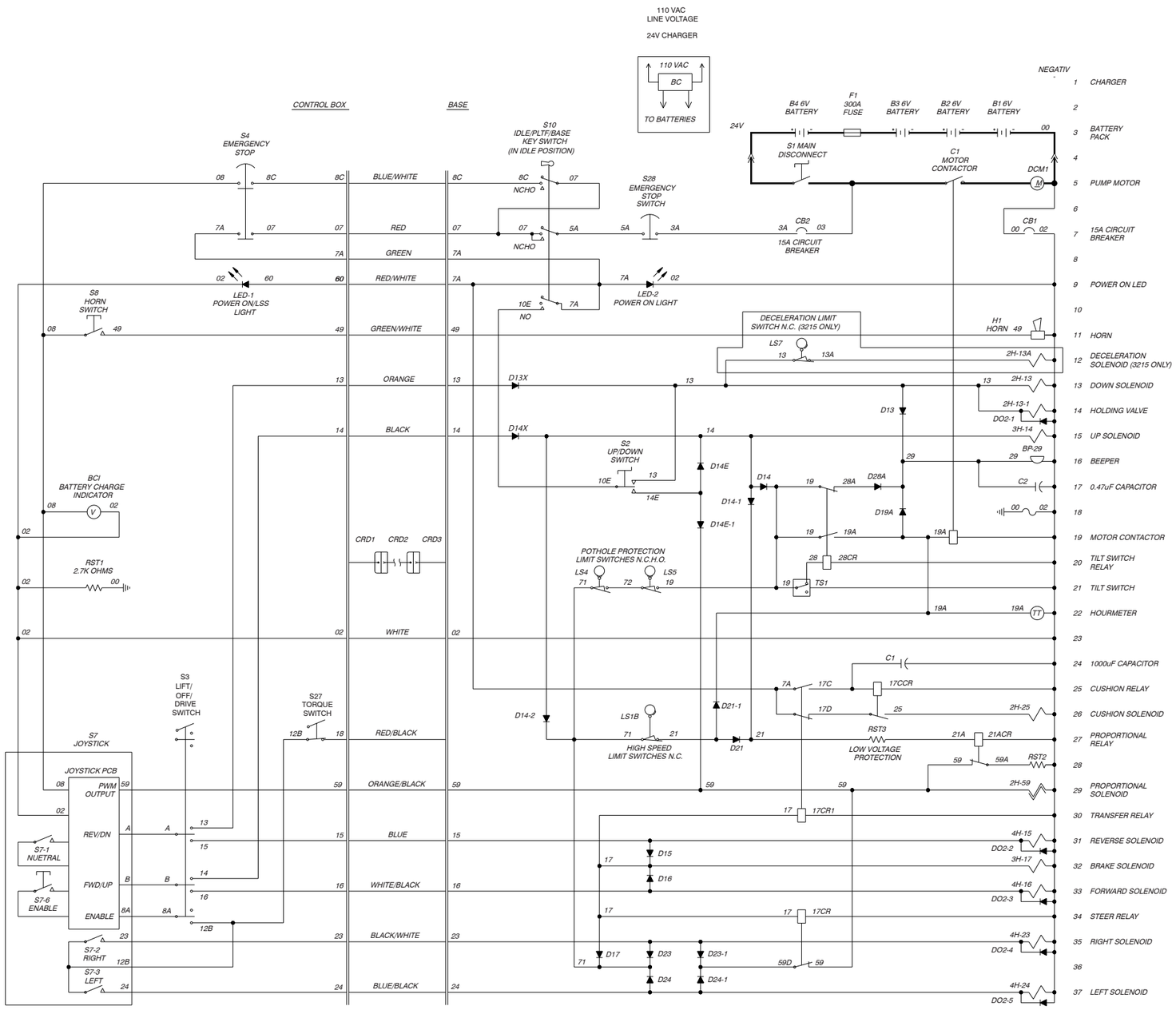

3.26c Electrical Schematic (EE Rated - Equipped with no options)

Serial Breakdown Reference Chart	
Model	**Serial Number**
SJIII 3215	10001534 & above
SJIII 3219	22093343 & above

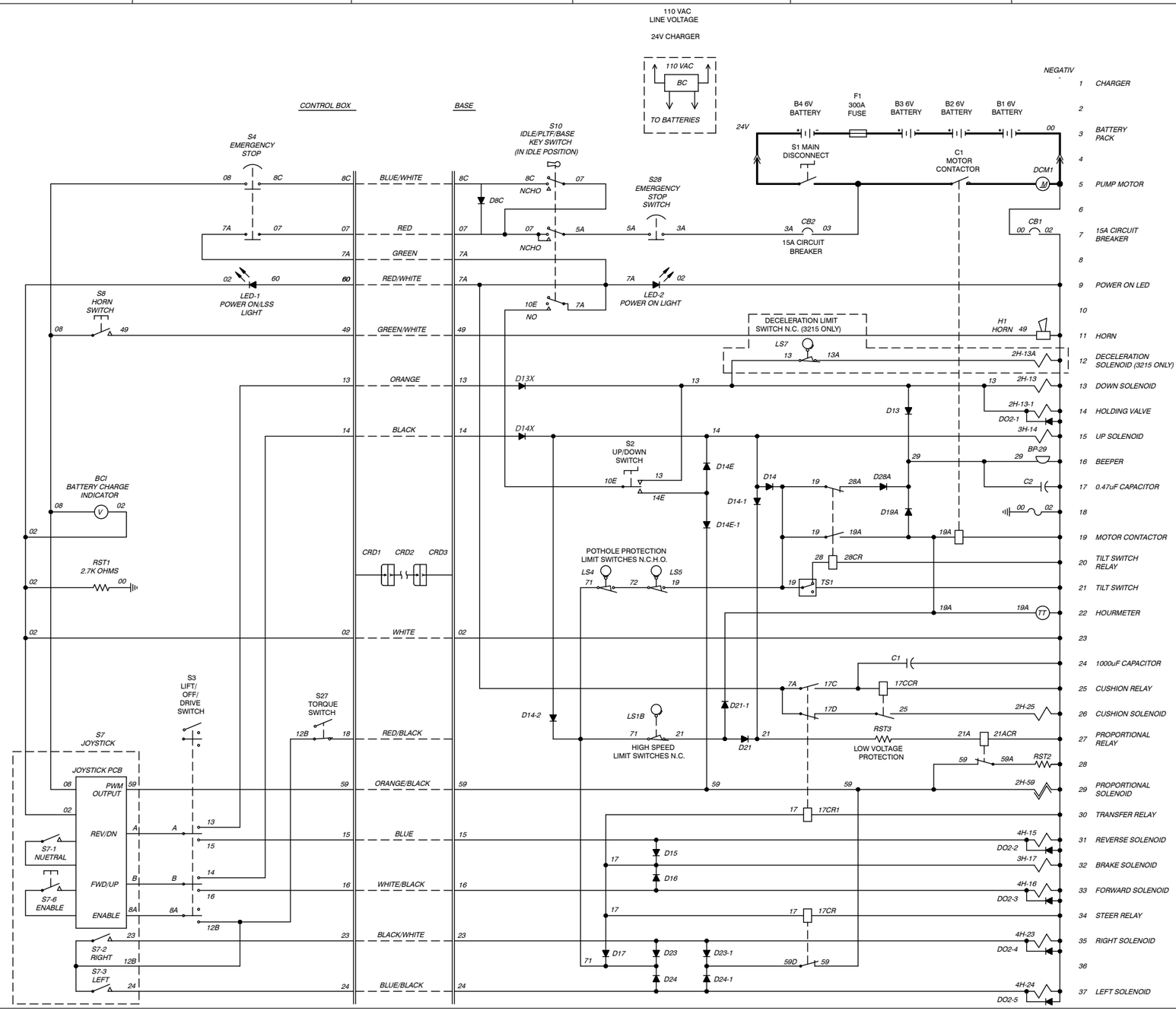

Serial Breakdown Reference Chart	
Model	**Serial Number**
SJIII 3215	10001533 & below
SJIII 3219	22093342 & below

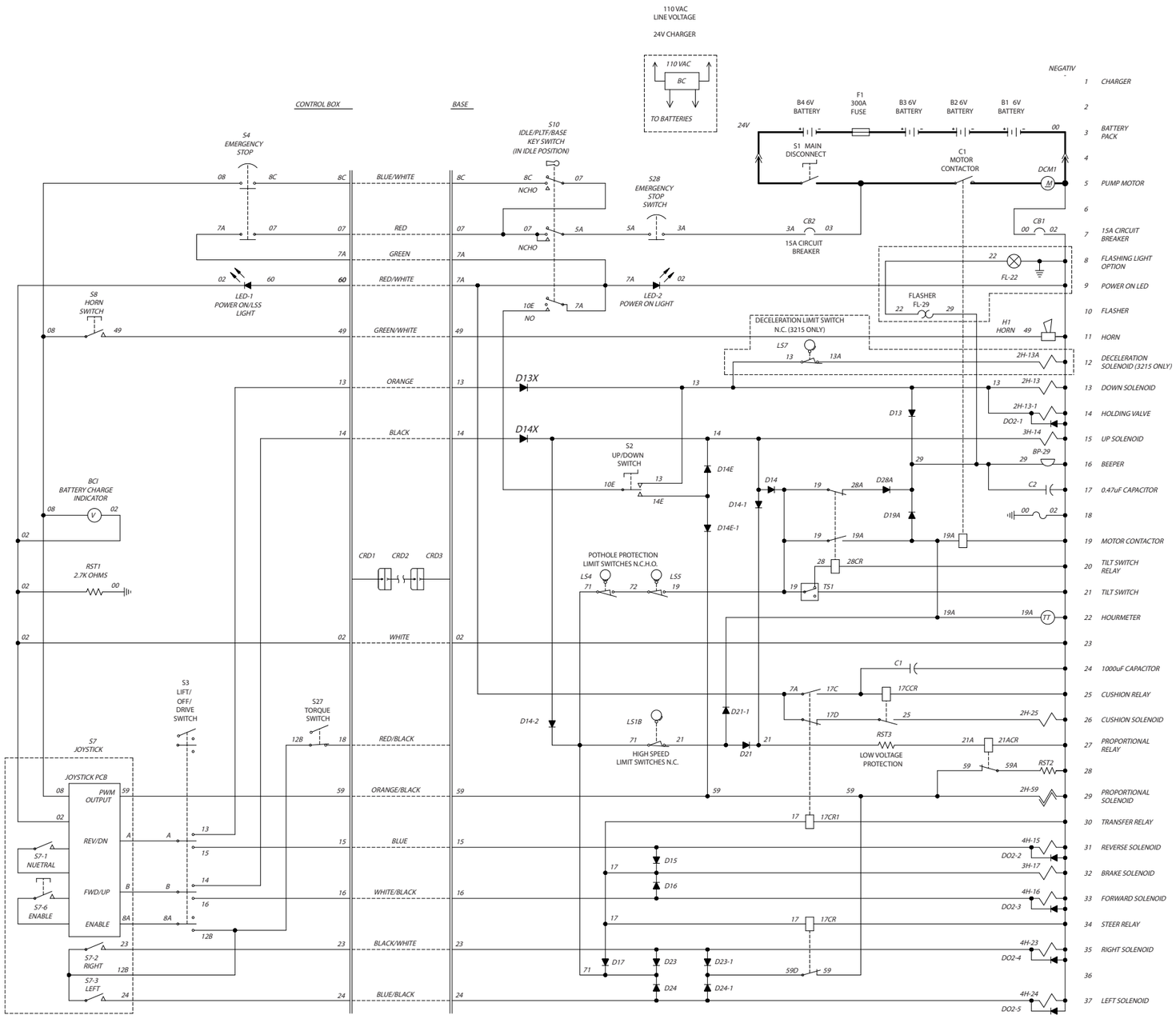

3.27b Electrical Schematic (EE Rated - Equipped with All options)

Serial Breakdown Reference Chart	
Model	**Serial Number**
SJIII 3215	10001534 & above
SJIII 3219	22093343 & above

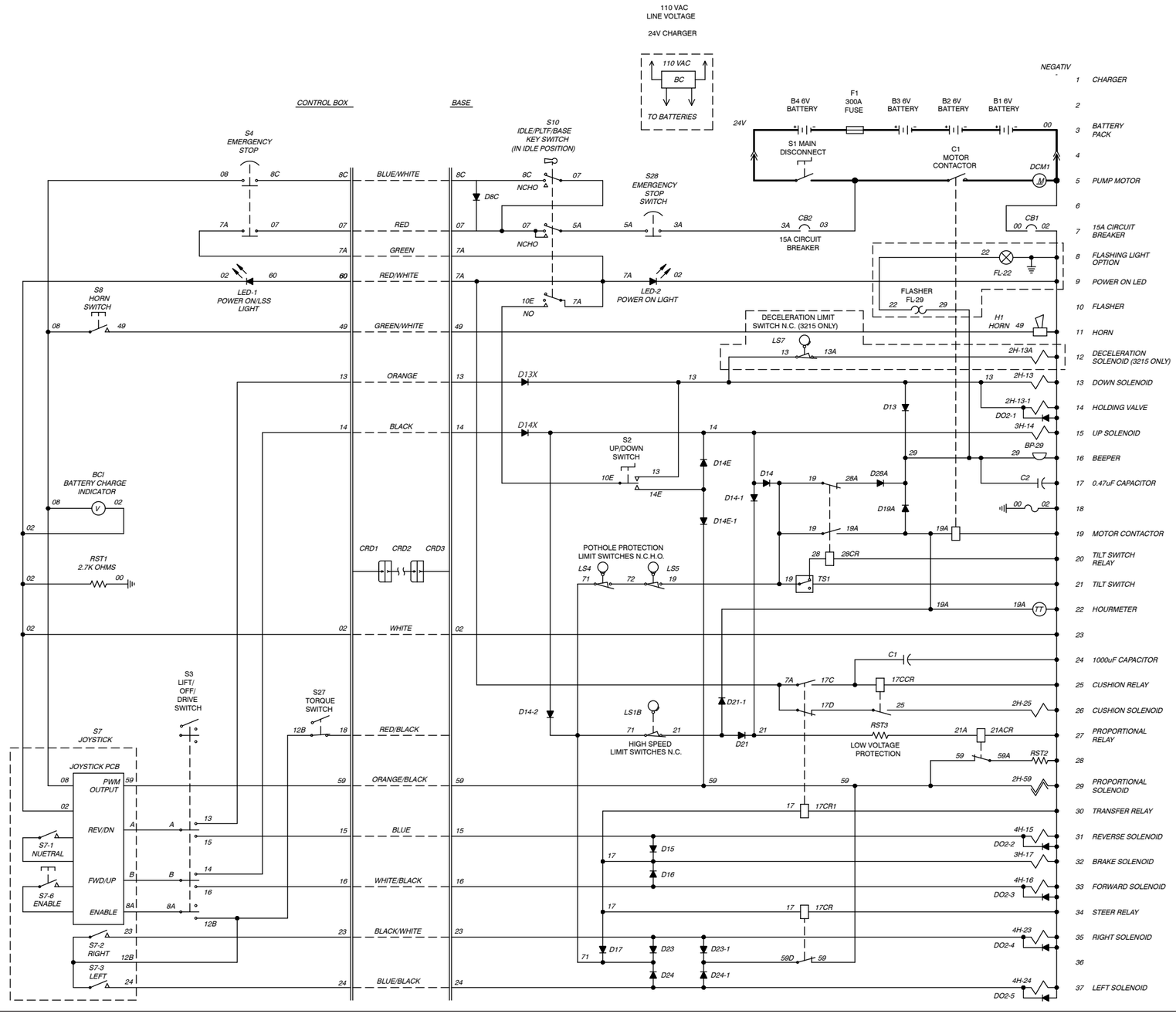

Section 4 - TROUBLESHOOTING INFORMATION

Introduction 83

Electrical System

4.1-1 All Controls Inoperative 84
4.1-2 All Controls Except for Down Function Inoperative 84
4.1-3 All Controls Inoperative From Base Control Console 85
4.1-4 All Controls Inoperative From Platform Control Console 85
4.1-5 No Drive or Up Function from Platform or Base Controls (CE) 85
4.1-6 No Down or Reverse Only Function from Platform Controls 86
4.1-7 No Up or Forward Only Function from Platform Control Console 86
4.1-8 No Up Function from Platform or Base Control Console 86
4.1-9 No Down Function from Platform or Base Control Console (ANSI/CSA) 87
4.1-10 No Down Function from Platform or Base Control Console (CE) 87
4.1-11 No Up Function from Base Control Console 87
4.1-12 No Down Function from Base Control Console 88
4.1-13 Platform Lowers Slowly from Platform and Base (Model 3215) 88
4.1-14 Platform does not Decelerate when Lowering (Model 3215) 88
4.1-15 Platform Lifts Slowly from Platform and Base Control console 88
4.1-16 Steer Only Inoperative 88
4.1-17 Drive Only Inoperative 88
4.1-18 No Drive or Steer when Platform Fully Lowered 89
4.1-19 No Drive or Steer when Platform Elevated 89
4.1-20 Elevated Drive Speed Does Not Activate 89
4.1-21 Work Platform Drives in Slow Speed Only 89
4.1-22 Forward Drive Function Inoperative 90
4.1-23 Reverse Drive Function Inoperative 90
4.1-24 Brake will not Release 90
4.1-25 Two or more Functions at one time 90

Hydraulic System

4.2-1 All Functions Inoperative 91
4.2-2 All Functions Sluggish 91
4.2-3 Platform Drifts Down 91
4.2-4 Platform Lifts Slowly 91
4.2-5 Platform Does Not Lift 91
4.2-6 Platform will not Lower 92
4.2-7 Platform Lowers Slowly 92
4.2-8 Platform Drives Slow 92
4.2-9 Platform will not Drive in Forward or Reverse 92
4.2-10 Brake(s) will not Release 93
4.2-11 Platform does not Steer 93

4

Introduction

The following pages contain a table of Troubleshooting Information for locating and correcting most service trouble which can develop. Careful and accurate analysis of the systems listed in the table of Troubleshooting Information will localize the trouble more quickly than any other method. This manual cannot cover all possible troubles and deficiencies that may occur. If a specific trouble is not listed, isolate the major component in which the trouble occurs, isolate whether the problem is electrical or hydraulic, and then isolate and correct the specific problem.

The content of this section is separated into “probable cause” and “remedy.” The information preceded by a number represents the “probable cause.” The following line, noted by a dash, represents the “remedy” to the “probable cause” directly above it. See example below for clarification.

1. Probable Cause
   - Remedy

Electrical System

4.1-1 All Controls Inoperative

1. Battery charger plugged into external power source.
   - Disconnect charger cord.
2. Batteries disconnected.
   - Connect batteries.
3. Dirty or loose battery terminals.
   - Clean and tighten connections.
4. Battery charge low.
   - Check each cell with a hydrometer. Reading should be 1.275 (fully charged). Recharge if low reading. Replace if reading difference between cells is 0.050.
5. Main battery cables open or defective.
   - Check continuity. Replace if defective.
6. Fuse F1 defective.
   - Replace fuse.
7. Main battery disconnect switch S1 open or defective.
   - Close switch. Check continuity. Replace if defective.
8. Loose or broken wire #3 from motor contactor C1 to circuit breaker CB2.
   - Check continuity. Replace if defective.
9. Loose or broken wire #3A from circuit breaker CB2 to charger relay L1CR.
   - Check continuity. Replace if defective.
10. Defective or tripped circuit breaker CB2.
    - Reset circuit breaker. Replace if defective.
11. Defective battery charger relay L1CR.
    - Check relay. Replace if defective.
12. Loose or broken wire #5 from charger relay L1CR to base emergency stop switch S28.
    - Check continuity. Replace if defective.
13. Open or defective base emergency stop switch S28.
    - Close switch. Check switch. Replace if defective.
14. Loose or broken wire #5A from base emergency stop switch S28 to base key switch S10.
    - Check continuity. Replace if defective.
15. Open or defective base key switch S10.
    - Select function with switch. Check switch. Replace if defective.
16. Loose or broken wire #00 from pump motor DCM1 to circuit breaker CB1.
    - Check continuity. Replace if defective.
17. Defective or tripped circuit breaker CB1.
    - Reset circuit breaker. Replace if defective.
18. Loose or broken wire #02 from circuit breaker CB1 to base terminal block.
    - Check continuity. Replace if defective.
19. Loose or broken wire #7A from base terminal block to CM1 control module pin P2-12. **(CE)**
    - Check continuity. Replace if defective.
20. Loose or broken wire #02 from base terminal block to CM1 control module pin P2-11. **(CE)**
    - Check continuity. Replace if defective.

4.1-2 All Controls Except for Down Function Inoperative

1. Loose or broken wire #59 from base terminal block to proportional valve 2H-59.
   - Check continuity. Replace if defective.
2. Loose or broken wire #02 from base terminal block to proportional valve 2H-59.
   - Check continuity. Replace if defective.
3. Defective proportional valve coil.
   - Check coil for resistance. Reading should be 19 ohms. Replace if defective.

Electrical System

4.1-3 All Controls Inoperative From Base Control Console

1. Loose or broken wire #07 from base terminal block to platform emergency stop switch S4.
   - Check continuity. Replace if defective.
2. Open or defective platform emergency stop switch S4.
   - Close switch. Replace if defective.
3. Loose or broken wire #7A from platform emergency stop switch S4 to base terminal block.
   - Check continuity. Replace if defective.
4. Loose or broken wire #7A from base terminal block to base key switch S10.
   - Check continuity. Replace if defective.
5. Open or defective base key switch S10.
   - Close switch. Replace if defective.
6. Loose or broken wire #10E from base key switch S10 to base up/down switch S2.
   - Check continuity. Replace if defective.

4.1-4 All Controls Inoperative From Platform Control Console

1. Loose or broken wire #8C from base key switch S10 to base terminal block.
   - Check continuity. Replace if defective.
2. Loose or broken wire #8C or wire #02 from base terminal block to platform emergency stop switch S4.
   - Check continuity. Replace if defective.
3. Open or defective platform emergency stop switch S4.
   - Close switch. Replace if defective.
4. Loose or broken wire #8 or wire #02 from emergency stop switch S4 to battery charge indicator BCI.
   - Check continuity. Replace if defective.
5. Loose or broken wire #8 or wire #02 from battery charge indicator BC1 to joystick S7.
   - Check continuity. Replace if defective.
6. Defective joystick enable switch S7-6.
   - Check switch. Replace if defective.
7. Defective joystick neutral switch S7-1.
   - Check switch. Replace if defective.
8. Defective joystick S7.
   - Check joystick. Replace if defective.

4.1-5 No Drive or Up Function from Platform or Base Controls (CE)

1. Defective tilt relay 28CR1 or Aux. tilt relay 28ECR1.
   - Check relay. Replace if defective.
2. Loose or broken wire #02 from base terminal block to tilt relay 28CR1 or Aux. tilt relay 28ECR1.
   - Check continuity. Replace if defective.
3. Loose or broken wire #28 from CM1 control module pin P3-4 to tilt relay 28CR1.
   - Check continuity. Replace if defective.
4. Loose or broken wire #28E from CM1 control module pin P3-6 to Aux. tilt relay 28ECR1.
   - Check continuity. Replace if defective.
5. Loose or broken wire #19 from base terminal block to Aux. tilt relay 28ECR1.
   - Check continuity. Replace if defective.
6. Loose or broken wire #19A from Aux. tilt relay 28ECR1 to tilt relay 28CR1.
   - Check continuity. Replace if defective.

Electrical System

7. Loose or broken wire #19B from tilt relay 28CR1 to base terminal block.
   - Check continuity. Replace if defective.
8. Loose or broken wire #19B from base terminal block to motor contactor C1.
   - Check continuity. Replace if defective.

4.1-6 No Down or Reverse Only Function from Platform Controls

1. Loose or broken wire “A” from proportional controller S7 to lift/drive switch S3.
   - Check continuity. Replace if defective.
2. Lift/Drive switch S3 defective.
   - Check switch. Replace if defective.
3. Defective PWM card on joystick S7.
   - Check joystick card. Replace if defective.
4. Loose or broken wire #13 down or #15 reverse from lift/drive switch S3 to base terminal block.
   - Check continuity. Replace if defective.

4.1-7 No Up or Forward Only Function from Platform Control Console

1. Loose or broken wire “B” from proportional controller S7 to lift/drive switch S3.
   - Check continuity. Replace if defective.
2. Lift/Drive switch S3 defective.
   - Check switch. Replace if defective.
3. Defective PWM card on joystick S7.
   - Check joystick card. Replace if defective.
4. Loose or broken wire #14 up or #16 forward from lift/drive switch S3 to base terminal block.
   - Check continuity. Replace if defective.

4.1-8 No Up Function from Platform or Base Control Console

1. Loose or broken wire #14 from base terminal block to up valve coil 3H-14.
   - Check continuity. Replace if defective.
2. Defective up valve coil 3H-14.
   - Check continuity through coil. Replace if defective.
3. Open diode D14-1.
   - Check diode. Replace if defective.
4. Open diode D14 **(ANSI/CSA)** or D14-2 **(CE)**.
   - Check diode. Replace if defective.
5. Machine not level. (Above high speed limit switch)
   - Use on level surface.
6. Loose or broken wire #19 from base terminal block to tilt switch TS1 **(ANSI/CSA)**.
   - Check continuity. Replace if defective.
7. Defective tilt switch TS1 **(ANSI/CSA)**.
   - Test and Verify Telt Circuit. Replace if defective.
8. Loose or broken wire #28 from tilt switch TS1 to tilt relay 28CR **(ANSI/CSA)**.
   - Check continuity. Replace if defective.
9. Loose or broken wire #02 from tilt switch TS1 to base terminal strip **(ANSI/CSA)**.
   - Check continuity. Replace if defective.
10. Defective tilt relay 28CR **(ANSI/CSA)**.
    - Check relay. Replace if defective.
11. Loose or broken wire #19A from tilt relay 28CR to pump motor contactor **(ANSI/CSA)**.
    - Check continuity. Replace if defective.

Electrical System (Continued)

12. Open or defective diode D14E-1
    - Check diode. Replace if defective.
13. See 4.1-5 of this section for more troubleshooting information.

4.1-9 No Down Function from Platform or Base Control Console (ANSI/CSA)

NOTE
Down function is not proportionally controlled.

1. Loose or broken wire #13 from base terminal block to down valve 2H-13 or holding valve 2H-13-1.
    - Check continuity. Replace if defective.
2. Loose or broken wire #02 from base terminal block to down valve 2H-13 or holding valve 2H-13-1.
    - Check continuity. Replace if defective.
3. Defective down valve 2H-13.
    - Check continuity through coil. Replace if defective.
4. Defective lift cylinder holding valve 2H-13-1.
    - Check continuity through coil. Replace if defective.

4.1-10No Down Function from Platform or Base Control Console (CE)

NOTE
Down function is not proportionally controlled.

1. Loose or broken wire #13 from base terminal block to CM1 control module pin P2-4.
    - Check continuity. Replace if defective.
2. Defective down relay 28CR2 or Aux. down relay 28ECR2.
    - Check relay. Replace if defective.
3. Loose or broken wire #02 from base terminal block to down relay 28CR2 or Aux. down relay 28ECR2.
    - Check continuity. Replace if defective.
4. Loose or broken wire #13 from base terminal block to Aux. down relay 28ECR2.
    - Check continuity. Replace if defective.
5. Loose or broken wire #13A from Aux. down relay 28ECR2 to down relay 28CR2.
    - Check continuity. Replace if defective.
6. Loose or broken wire # 13B from down relay 28CR2 to down valve 2H-13B or holding valve 2H-13B-1.
    - Check continuity. Replace if defective.
7. Defective down valve 2H-13B.
    - Check continuity through coil. Replace if defective.
8. Defective lift cylinder holding valve 2H-13B-1.
    - Check continuity through coil. Replace if defective.
9. Loose or broken wire #02 from holding valve 2H-13B-1 or down valve 2H-13B to base terminal block.
    - Check continuity. Replace if defective.

4.1-11No Up Function from Base Control Console

1. Defective up/down switch S2.
    - Check switch. Replace if defective.
2. Loose or broken wire #14E from up/down switch S2 to base terminal switch.
    - Check continuity. Replace if defective.
3. Open diode D14E-1.
    - Check diode. Replace if defective.
4. Open diode D14E.

Electrical System (Continued)

- Check diode. Replace if defective.

4.1-12No Down Function from Base Control Console

1. Defective up/down switch S2.
   - Check switch. Replace if defective.
2. Loose or broken wire #13 from up/down switch S2 to base terminal block.
   - Check continuity. Replace if defective.

4.1-13Platform Lowers Slowly from Platform and Base (Model 3215)

1. Deceleration limit switch LS7 stuck, out of adjustment or is defective.
   - Readjust limit switch so it returns to the normally closed position at 14” before completely stowed. Check the limit switch is functioning. Replace if defective.

4.1-14Platform does not Decelerate when Lowering (Model 3215)

1. Deceleration limit switch LS7 out of adjustment.
   - Readjust limit switch so it returns to the normally closed position at 14” before completely stowed. Check the limit
   - switch is functioning. Replace if defective.
2. Loose or broken wire #13A **(ANSI/CSA)** or #13C **(CE)** from terminal strip to deceleration valve coil 2H-13A **(ANSI/CSA)** or 2H-13C **(CE)**.
   - Check continuity. Replace if defective.
3. Loose or broken wire #02 from terminal strip to deceleration valve coil 2H-13A **(ANSI/CSA)** or 2H-13C **(CE)**.
   - Check continuity. Replace if defective.
4. Defective deleration valve coil 2H-13A **(ANSI/CSA)** or 2H-13C **(CE)**.
   - Check coil. Replace if defective.

4.1-15Platform Lifts Slowly from Platform and Base Control console

1. Open diode D14-1.
   - Check diode. Replace if defective.

4.1-16Steer Only Inoperative

1. Defective relay 17CR.
   - Check relay. Replace if defective.
2. Loose or broken wire #59D from diodes D23-1 and D24-1 to base terminal block TB1.
   - Check continuity. Replace if defective.
3. Loose or broken wire #59D from 17CR steer relay to base terminal block TB1.
   - Check continuity. Replace if defective.
4. Loose or broken wire #59 from 17CR steer relay to base terminal block TB1.
   - Check continuity. Replace if defective.

4.1-17Drive Only Inoperative

1. Open diode D17.
   - Check diode. Replace if defective.

Electrical System (Continued)

4.1-18No Drive or Steer when Platform Fully Lowered

1. Loose or broken wire #71 from base terminal block to drive override limit switch LS6.
   - Check continuity. Replace if defective.
2. Defective drive override switch LS6.
   - Check switch. Replace if defective.
3. Loose or broken wire #19 from drive override limit switch LS6 to base terminal block.
   - Check continuity. Replace if defective.

4.1-19No Drive or Steer when Platform Elevated

1. Pothole protection bars not fully lowered.
   - Clear obstructions. Repair as needed.
2. Loose or broken wire #71 from base terminal block to pothole protection limit switch LS4.
   - Check continuity. Replace if defective.
3. Defective pothole protection limit switch LS4.
   - Check switch. Replace if defective.
4. Loose or broken wire #72 from pothole protection limit switch LS4 to base terminal block.
   - Check continuity. Replace if defective.
5. Loose or broken wire #72 from base terminal block to pothole protection limit switch LS5.
   - Check continuity. Replace if defective.
6. Defective pothole protection limit switch LS5.
   - Check switch. Replace if defective.
7. Loose or broken wire #19 from pothole protection limit switch LS5 to base terminal block.
   - Check continuity. Replace if defective.

4.1-20Elevated Drive Speed Does Not Activate

1. Loose or broken wire #59 from base terminal strip proportional relay 21ACR.
   - Check continuity. Replace if defective.
1. Loose or broken wire #59A from proportional relay 21ACR to resistor RST2.
   - Check continuity. Replace if defective.
2. Resistor RST2 open.
   - Check resistor ohms, it should be 15 ohms. Replace if defective.
3. Loose or broken wire #02 from resistor RST2 to base terminal block.
   - Check continuity. Replace if defective.
4. Proportional relay 21ACR defective.
   - Check relay, replace if defective.

4.1-21Work Platform Drives in Slow Speed Only

1. Open diode D17-1.
   - Check diode. Replace if defective.
2. Loose or broken wire #17A from base terminal block to high speed limit switch LS1B.
   - Check continuity. Replace if defective.
3. Open or defective high speed limit switch LS1B.
   - Check switch. Replace if defective.
4. Loose or broken wire #21 from high speed limit switch LS1B to low voltage protection resistor RST3.
   - Check continuity. Replace if defective.
5. Defective low voltage protection resistor RST3.
   - Check resistor. Replace if defective.
6. Loose or broken wire #21A from low voltage protection resistor RST3 to proportional relay 21ACR.
   - Check continuity. Replace if defective.

Electrical System (Continued)

7. Proportional relay 21ACR defective.
   - Check relay, replace if defective.
8. Loose or broken wire #2 from proportional relay 21ACR to base terminal block.
   - Check continuity. Replace if defective.
9. Proportional controller S7 out of adjustment.
   - Adjust controller. Refer to Section 5, Joystick Adjusting Procedure.

4.1-22Forward Drive Function Inoperative

1. Loose or broken wire #16 from lift/drive switch S3 to base terminal block.
   - Check continuity. Replace if defective.
2. Loose or broken wire #16 from base terminal block to forward drive valve coil 4H-16.
   - Check continuity. Replace if defective.
3. Forward drive valve coil 4H-16 defective.
   - Check continuity through coil. Replace if defective.
4. Loose or broken wire #02 from forward drive valve coil 4H-16 to base terminal block.
   - Check continuity. Replace if defective.
5. Open diode D16.
   - Check diode. Replace if defective.

4.1-23Reverse Drive Function Inoperative

1. Loose or broken wire #15 from lift/drive switch S3 to base terminal block.
   - Check continuity. Replace if defective.
2. Loose or broken wire #15 from base terminal block to reverse drive valve coil 4H-15.
   - Check continuity. Replace if defective.
3. Reverse drive valve coil 4H-15 defective.
   - Check continuity through coil. Replace if defective.
4. Loose or broken wire #02 from reverse drive valve coil 4H-15 to base terminal block.
   - Check continuity. Replace if defective.
5. Open diode D15.
   - Check diode. Replace if defective.

4.1-24Brake will not Release

1. Diode D-16 forward or D-15 reverse is shorted or open.
   - Check diode. Replace if defective.
2. Loose or broken wire #17 from base terminal strip to brake coil 3H-17.
   - Check continuity. Replace if defective.
3. Brake valve coil 3H-17 defective.
   - Check continuity through coil. Replace if defective.
4. Loose or broken wire #02 from brake valve coil 3H-17 to base terminal block.
   - Check continuity. Replace if defective.

4.1-25Two or more Functions at one time

1. Shorted diode.
   - Check continuity of all diodes. Replace if defective.

Hydraulic System

4.2-1 All Functions Inoperative

1. Proportional valve 2H-59 defective or is sticking.
   - Check valve. Replace if defective.
2. Compensator portion of proportional valve defective or is sticking.
   - Check valve. Replace if defective.
3. Pump P1 defective.
   - Check pump. Replace if defective.

4.2-2 All Functions Sluggish

1. System relief valve R1 defective or not adjusted properly.
   - Adjust valve. Replace if defective.
2. Hydraulic pump P1 worn.
   - Check pump. Replace if defective.

4.2-3 Platform Drifts Down

1. Defective lift cylinder gland seal.
   - Check for hydraulic oil leaking from the gland seal. Rebuild cylinder. Replace if damaged.
2. Combination of: Defective holding valve 2H-13-1 and either defective lowering valve 2H-13 or relief valve R2 or manual lowering valve V1. **(ANSI/CSA)**
   - Check valves. Replace if defective.

   Combination of: Defective holding valve 2H-13B-1 and either defective lowering valve 2H-13B or relief valve R2 or manual lowering valve V1. **(CE)**
   - Check valves. Replace if defective.
3. Defective o-ring between lift cylinder and holding valve manifold block or loose bolts holding the manifold.
   - Check for hydraulic oil leaking from between cylinder and manifold. Tighten bolts on manifold or replace o-ring. Replace manifold if damaged.

4.2-4 Platform Lifts Slowly

1. Open or leaking manual lowering valve V1.
   - Close valve. Replace if defective.
2. Lift relief valve R2 defective or not adjusted correctly.
   - Adjust valve. Replace if defective.
3. Open manual override on holding valve 2H-13-1 **(ANSI/CSA)** or 2H-13B-1 **(CE)**.
   - Depress and turn manual override clockwise to close. Replace if defective.
4. Stuck or defective deceleration valve 2H-13A **(Model 3215 ANSI/CSA)** or 2H-13C **(Model 3215 CE)**.
   - Check valve. Replace if defective.

4.2-5 Platform Does Not Lift

1. Open manual lowering valve V1.
   - Close valve. Replace if defective.
2. Hydraulic oil level too low.
   - Fully lower the platform. Fill hydraulic tank with recommended fluid to appropriate level.
3. Platform weight excessive.
   - Reduce platform load to maximum capacity.
4. Up valve 3H-14 defective or is sticking.
   - Check valve. Replace if defective.
5. Plugged deceleration valve 2H-13A **(Model 3215 ANSI/CSA)** or 2H-13C **(Model 3215 CE)**
   - Clear obstruction from valve. Replace if defective.

Hydraulic System (Continued)

4.2-6 Platform will not Lower

NOTE

Down function is not proportionally controlled.

1. Lowering valve 2H-13 **(ANSI/CSA)** or 2H-13B **(CE)** defective or is sticking.
   - Clean valve. Replace if defective.
2. Defective holding valve 2H-13-1**(ANSI/CSA)** or 2H-13B-1 **(CE)**.
   - Clean valve. Replace if defective.
3. Lowering orifice O2 plugged or contaminated. **(Model 3219)**
   - Clear debris. Replace Orifice. Replace if defective.
4. Emergency lowering orifice O6 plugged or contaminated.
   - Clear debris. Replace Orifice. Replace if defective.
5. Plugged deceleration valve 2H-13A **(ANSI/CSA)** or 2H-13C **(CE)**.
   - Clear obstruction from valve. Replace if defective.

4.2-7 Platform Lowers Slowly

1. Stuck or defective deceleration valve 2H-13A **(ANSI/CSA)** or 2H-13C **(CE)**.
   - Check valve. Replace if defective.

4.2-8 Platform Drives Slow

1. Free-wheeling valve V2 open or defective.
   - Close valve. Replace if defective.
2. Drive motor M1 or M2 defective.
   - Check motors. Replace if defective.
3. Cushion valve 2H-25 is stuck or defective.
   - Check valve. Replace if defective.

4.2-9 Platform will not Drive in Forward or Reverse

1. Open free-wheeling valve V2.
   - Close Valve. Replace if defective.
2. Forward drive valve 4H-16 or reverse drive valve 4H-15 defective or is sticking.
   - Clean Valve. Replace if defective.
3. Counterbalance valve CB1 defective or is plugged.
   - Clean Valve. Replace if defective.

Hydraulic System (Continued)

4.2-10 Brake(s) will not Release

1. Brake valve 3H-17 defective or is sticking.
   - Clean valve. Replace if defective.
2. Brake orifice 04 plugged.
   - Remove orifice. Clean and reinstall.
3. Brake cylinder C4 defective.
   - Rebuild cylinder. Replace if damaged.

4.2-11 Platform does not Steer

1. Right steer valve 4H-23 or left steer valve 4H-24 defective or sticking.
   - Clean valve. Replace if defective.
2. Steer cylinder C3 seals leaking.
   - Rebuild cylinder(s). Replace if damaged.
3. Mechanical binding in king pins.
   - Check for binding. Repair as needed.
4. Orifices 05 plugged.
   - Clean Orifices, and reinstall.

Section 5 - PROCEDURES

Service & Maintenance

General....95
Safety and Workmanship....95

Platform

5.1-1 OEM Controller Electronics Information....95
5.1-2 OEM Controller Troubleshooting....96
5.1-3 OEM Controller Switch Wiring....99
5.1-4 Gate Spring Hinge Adjustment....100
5.1-5 Platform Mounting Hardware....101

Base

5.2-1 System Relief Pressure Adjustment....102
5.2-2 Lift Pressure Adjustment....102
5.2-3 Electronic Tilt Switch Setup Procedure....103
5.2-4 Pothole Limit Switches (LS4 & LS5) Replacement and Adjustment....107
5.2-5 Wheel Replacement and Torquing Procedure....108
5.2-6 Battery Maintenance....114
5.2-7 Charger Maintenance - Delta-Q....114

Scissors

5.3-1 High Speed Cutout (LS1B) & Deceleration (LS7) Limit Switches Replacement and Adjustment....121

5

General

The following information is provided to assist you in the use and application of servicing and maintenance procedures contained in this chapter.

Safety and Workmanship

Your safety, and that of others, is the first consideration when engaging in the maintenance of equipment. Always be conscious of weight. Never attempt to move heavy parts without the aid of a mechanical device. Do not allow heavy objects to rest in an unstable position. When raising a portion of the equipment, ensure that adequate support is provided.

Unless specifically noted otherwise, before beginning any procedure:

1. Park the mobile elevating work platform (MEWP) on a firm, level surface.
2. Fully lower the machine.
3. Push in the "" emergency stop buttons on the platform control console and the base control console.
4. Turn the off/platform/base key switch to the "" off position. Remove the key.
5. Turn the main power disconnect switch to the "" off position.

After completing any procedure which involves modifying, adjusting, or replacing any hydraulic or electrical components, perform all of the function tests given in your unit's Operating Manual.

Platform

5.1-1 OEM Controller Electronics Information

Flow Control

Single coil or solenoid for single direction. The coil has two connections; one is wired to the P.C. Board (A) terminal and the other is wired to (-), or the negative side of the supply voltage. Switches to control directional valves may be provided on the controller.

Adjustment Procedures

Adjustments are made by turning a trimpot adjustment screw. The trimpots are multi-turn, end to end-devices. It may be necessary to turn the adjustment screw several turns to observe a change in output.

Clockwise (CW) adjustment of the trimpot increases the output.

Counter-clockwise (CCW) adjustment of the trimpot decreases the output.

Adjustments affect output current, voltage or percentage of duty cycle to the coil. The minimum and maximum output is preset at the factory. However, for optimum performance, they must be adjusted while the equipment is operating.

Although the following adjustments affect the current/voltage or percentage of duty cycle, the best way to adjust the function is to observe the response or speed of the function. The following adjustments affect function response, or speed. There may be some interaction between adjustments, making it necessary to repeat the adjustment in order to achieve the desired response.

"Threshold" Adjustments

Adjusts the initial current flow or duty cycle, affecting the function response or speed when the handle is first moved from the off position. Deflect the handle slowly to the position where the controller first turns on. Adjust the threshold trimpot screw to the point where the controlled function just starts to move, then turn the trimpot screw one, full turn in the counterclockwise direction. This adjustment should be done first.

"Maxout" Adjustments

Adjusts the full stroke current or duty cycle affecting the maximum function response, or speed when the handle is deflected to its full travel. Fully deflect the handle, and adjust the maxout trimpot for maximum desired function response or speed. To obtain proportional resolution, it is important that the function starts to slow down as soon as the handle is moved back from the fully deflected position.

The ideal adjustment occurs when the function just begins to move when the handle is deflected, and the output increases until it reaches its maximum desired response or speed at the end of handle travel.

5.1-2 OEM Controller Troubleshooting

Problem

1. The function will not operate when the handle is moved. The LEDs do not light
   - A. Check that voltage is present at the positive (+)input terminal.
   - B. Check that ground is connected to the negative (-) terminal.
   - C. If there is an in-line fuse, check to see if it is good.
   - D. Check the controller on/off switch and the connectors. Voltage should be present at the (X) terminal when the controller is turned on.
   - E. Check that valve wiring is not shorted to ground. The LEDs will not light.
   - F. Check that valve wiring is not open. The LEDs will light, but the intensity will not vary.
   - G. Check trimpot settings. Fully "CCW" turns output off, "CW" turns output fully on.
2. The function jumps or lurches when turned on.
   - A. Perform "Threshold" adjustment procedures.
3. The function reaches maximum speed before the handle is fully deflected,
   - A. Perform "Maxout" adjustment procedures.
4. The function speed remains constant regardless of the degree of handle deflection.
   - A. Perform "Maxout" adjustment procedures.

IRS Option

1. Function speed reacts too slowly or too quickly in relation to handle deflection.
   A. Check “IRS” (Ramp) trimpot adjustment. “CW” increases ramp time, “CCW” decreases ramp time.

Integrated Ramp System (IRS)

Provides smooth function response ,when reacting to an abrupt change in handle deflection. “CW” rotation of the trimpot increases ramp time and slows the response time. “CCW” decreases ramp time and increases the response time. To increase the ramp time, turn the adjusting screw “CW” a few turns, then move the controller handle abruptly. Continue to adjust until a smooth response is observed. Most controllers have on/off contacts which remove power from the P.C. Board when the handle is returned to the off position. When the handle is abruptly returned to neutral, the output will not ramp down, and the function will stop.

Ramp Thru Off

The P.C. Board should be adjusted as outlined in the IRS adjustment procedure. If the handle is abruptly returned to neutral (OFF) the output will ramp down to off. Ramp time is factory set to 2 seconds, unless otherwise specified.

NOTE

Trimpots should be sealed with nail polish or enamel based paint.

WARNING

Do not use RTV silicone.

5.1-3 OEM Controller Switch Wiring

WIRE CHART		
COLOR	FROM	TO
WHT/RED	STEER LEFT	PIN #1
WHT/GRN	STEER COMMON	PIN #2
WHT	STEER RIGHT	PIN #3
YEL	FORWARD/UP	PIN #4
WHT/BLK	+24V INPUT	PIN #5
GRY	REVERSE/DOWN	PIN #6
BLU	PWM OUT (A)	PIN #7
BLK	GROUND (-)	PIN #8
WHT/BLU	ENABLE OUT	PIN #9

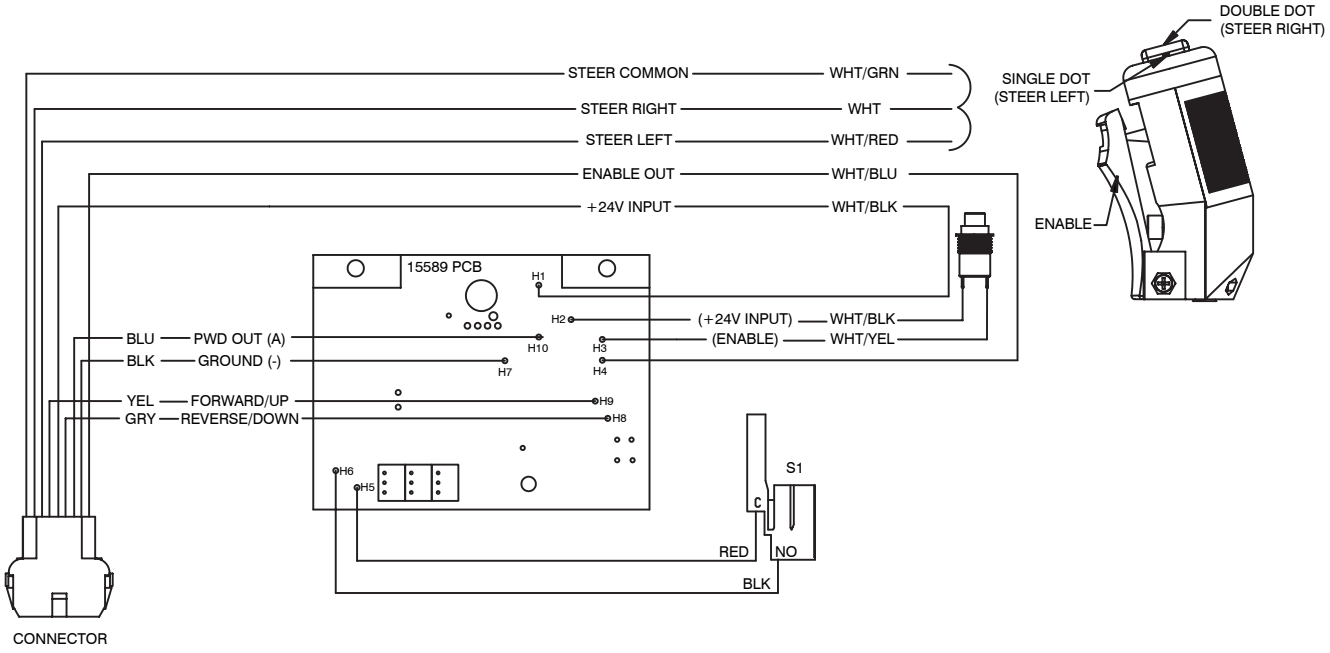

5.1-4 Gate Spring Hinge Adjustment

1. The tension of the spring hinges should be such that when the gate is opened halfway and released, it will close fully and latch.

2. To adjust the tension of the spring hinges, first remove the safety locking screw of each hinge. Retain the screws for reinstallation later.

If Locking Screw Located at the Top or Bottom of the Spring Hinge,

3. To increase the tension, insert a 5/32” hex wrench in the screw socket, and turn the wrench clockwise. To release the tension, depress the hex wrench in the socket, let it rotate counterclockwise, then release the hex wrench.

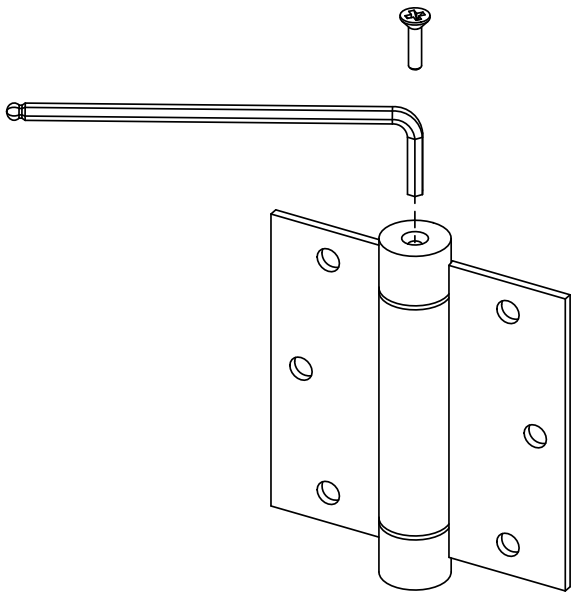

4. Adjust the tension on both hinges until the gate releases and latches from a half open position.

5. Reinstall the safety locking screws into the hinges when tension adjustment is complete.

If Locking Screw Located at the Side of the Spring Hinge,

NOTE

Adjusting the tension on the spring hinge is a two handed operation.

6. To increase the tension, insert a 5/32” hex wrench in the screw socket. Turn the wrench clockwise to desired tension as well as aligning the locking screw hole. Hold the wrench in place, maintaining the selected tension, while reinstalling the locking screw.

NOTE

Ensure the holes inside the hinges are aligned before inserting the locking screw.

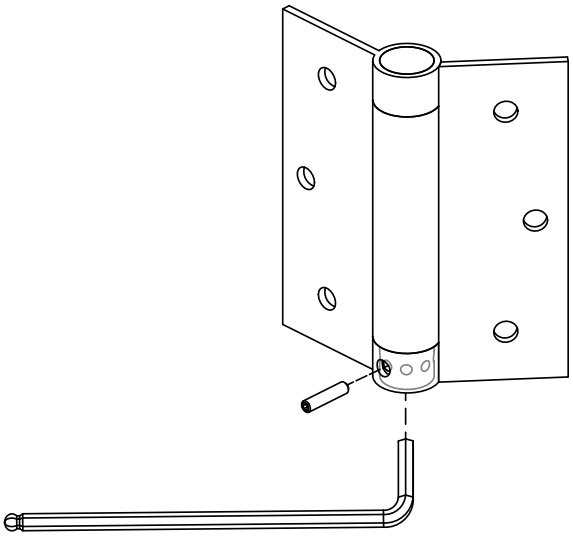

7. Adjust the tension on both hinges until the gate releases and latches from a half open position.

5.1-5 Platform Mounting Hardware

If damage is found during an inspection of the platform mounting hardware, or following maintenance or repair of the platform mounting hardware and/or removal of the platform, you must:

1. Inspect the platform, scissors, and the attachment area. Make sure you also do a check for damage to the threads on the scissor arm bracket ❶. Remove any debris, oils or grease from the threads.
2. Replace all of the platform mounting hardware ❷ (bolts, flat washers, and spring washers) with new Skyjack-approved parts. Refer to the parts manual for the part numbers for your specific MEWP.
3. Apply a high-strength threadlocker (Loctite 270 or equivalent) to each bolt. Refer to the threadlocker manufacturer instructions for the specific requirements on its use.
4. Insert all of the bolts evenly. Then use a correctly calibrated torque wrench set to 41 Nm (30 ft-lb) to tighten each bolt. Use a smooth, even motion until an indication (audible click) is heard and felt.
5. When all of the bolts are torqued, repeat the tightening sequence to confirm the torque.

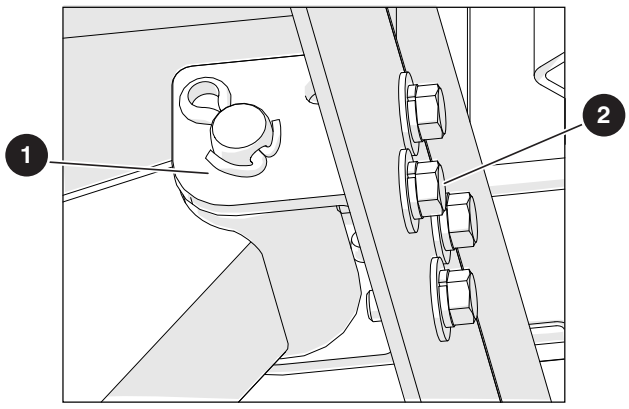

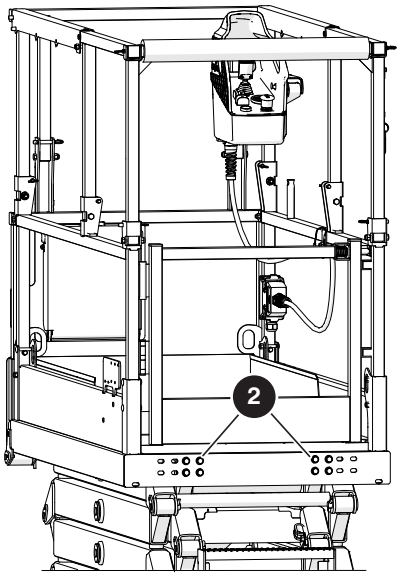

Base

5.2-1 System Relief Pressure Adjustment

1. Locate the system pressure quick disconnect port on the main manifold.
2. Install a calibrated 5000 psi gauge to the system pressure quick disconnect port.
3. Remove the platform control console the guardrail and disconnect from the main control cable.
4. Locate the main control cable plug at the rear of the aerial platform.
5. Disconnect the main cable and connect the platform control console into the plug.
6. At the main manifold, loosen the locknut on the system relief valve R1.
7. Select drive with the lift/drive select switch on the platform control console.
8. Engaged steer right and hold.
9. Observe reading on gauge. Adjust the R1 system relief value listed on the serial number plate. Turning the stem on the relief valve clockwise will increases pressure. Turning the stem counterclockwise will decreases pressure.
10. Release steer switch and tighten the locknut.
11. Remove the gauge from system pressure test port.

5.2-2 Lift Pressure Adjustment

NOTE

Adequate area to raise the platform to full height is required for the following steps.

1. Locate the lift pressure test port on the main manifold.
2. Install a calibrated 3000 psi gauge to the lift pressure quick disconnect port.
3. At the main manifold, loosen the locknut on the lift relief valve R2.
4. Close the manual lowering valve. Use the lift switch at the base control console to raise the platform to full height and hold the lift up switch on.
5. Observe the reading on the gauge. Adjust the R2 relief valve to the value listed on the serial number plate. Turning the stem of the relief valve clockwise will increases pressure. Turning the stem counterclockwise will decreases pressure.
6. Remove the gauge from lift pressure test port.

NOTE

Pressure setting may vary as aerial platform components wear. The lift pressure should be set for rated load only.

5.2-3 Electronic Tilt Switch Setup Procedure

The following information is supplied for replacement or reprogramming of the electronic tilt switch. Also included are test and verification instructions. Follow the appropriate procedures below.

Tilt Switch Replacement

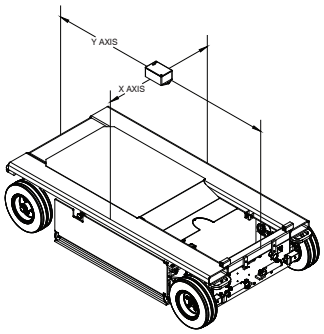

1. Ensure aerial platform is parked on a firm level surface.
2. Chock or block wheels to keep the aerial platform from rolling forward or backward.
3. Lower/Raise the platform and secure the scissors using the maintenance bars. (Refer to Operating manual for Maintenance Supports Procedure)
4. Push in "●" emergency stop buttons and turn main disconnect switch to "○" off position.
5. Remove any covers to locate and view the tilt switch.
6. Disconnect tilt switch from 4 pin connector.
7. Remove old tilt switch from mount.
8. Install new switch to mount (in the same orientation as the old switch) and connect switch plug to 4-pin connector.

NOTE

The tilt circuit is only powered when activating a function.

9. Disconnect all wires #02 from motor contactor.
10. Install jumper wire between #7 and #19 to terminal strip.
11. Pull out "●" emergency stop button and turn main disconnect switch to "|" ON position.
12. Verify switch is powered. (Red or green LED will turn on solid)

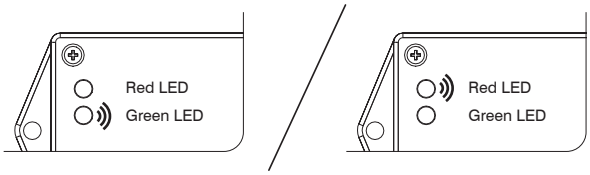

13. **Program the Tilt Switch**
    a. Press and release the set up button 3 times.
    b. Observe program delay / stabilization time. (Only the red LED will blink for 4 seconds)

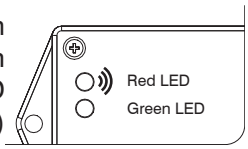

    c. Both LEDs will flash for 1 second. **Results:** The switch is learning the new zero position.

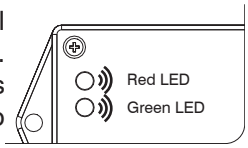

    d. Both LEDs will turn on solid for 1 second. **Results:** The new zero position has been learned.

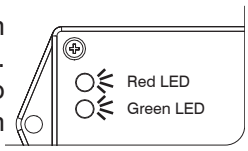

    e. The green LED will flash and then the red LED will turn on solid for 2 seconds.

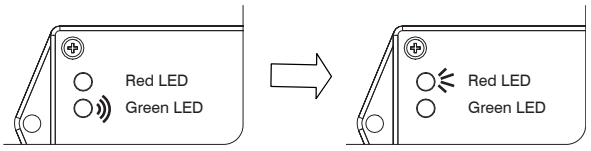

    Results: The switch is verifying the new zero position.

    f. The green LED will turn on solid. **Results:** The switch is ready for normal operation.

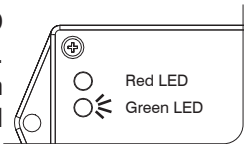

14. Turn main disconnect switch to "○" off position.

15. Remove jumper wire between #7 and #19 from terminal block.
16. Reattach all wires #02 to motor contactor.
17. Reinstall any covers that was removed.
18. Remove chock or wheel blocks.
19. Proceed to Test and Verify Tilt Circuit.

Reprogramming Existing Tilt Switch

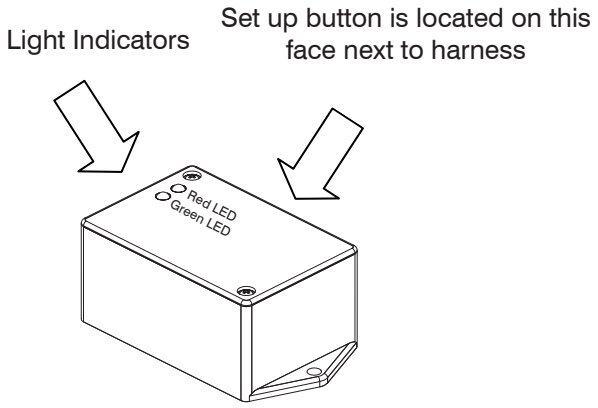

1. Ensure aerial platform is parked on a firm level surface.
2. Chock or block wheels to keep the aerial platform from rolling forward or backward.
3. Lower/Raise the platform and secure the scissors using the maintenance bars. (Refer to Operating manual for Maintenance Supports Procedure)

NOTE

The tilt circuit is only powered when activating a function.

4. Remove any covers to locate and view the tilt switch.
5. Disconnect all wires #02 from motor contactor.
6. Install jumper wire between #7 and #19 to terminal strip.
7. Turn main disconnect switch to "|" ON position.
8. Verify switch is powered. (Red or green LED will turn on solid)

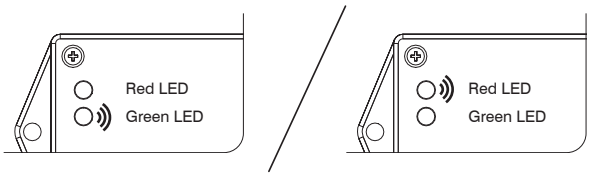

9. **Reprogram the Tilt Switch**

a. Press and hold the setup button until both lights start to flash. (Approximately 5 sec.) **Results:** Both LEDs will be OFF.

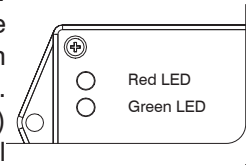

b. Both LEDs will flash.

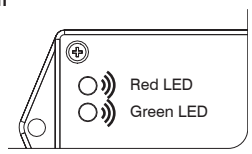

IMPORTANT

Step "c" must be completed within a 5 second period, or the switch will automatically exit program mode and return to normal operation using previously stored data.

c. Press and release set up button 3 times.

d. If 5 second period has expired prior completion, repeat Step "a", "b" and "c".

e. Observe program delay / stabilization time. (Only the red LED will blink for 4 seconds)

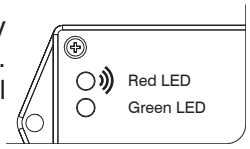

f. Both LEDs will flash for 1 second. **Results:** The switch is learning the new zero position.

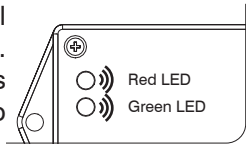

g. Both LEDs will turn on solid for 1 second. **Results:** The new zero position has been learned.

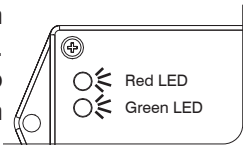

h. The green LED will flash and then the red LED will turn on solid for 2 seconds.

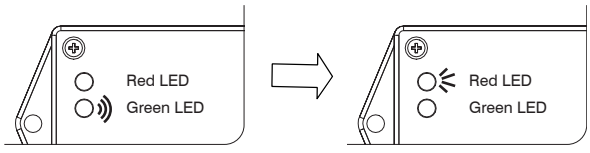

Results: The switch is verifying the new zero position.

i. The green LED will turn on solid. **Results:** The switch is ready for normal operation.

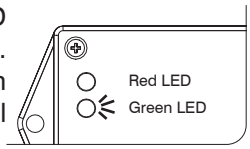

10. Turn main disconnect switch to "O" off position.
11. Remove jumper wire between #7 and #19 from terminal block.
12. Reattach all wires #02 to motor contactor.
13. Reinstall any covers that was removed.
14. Remove chock or wheel blocks.
15. Proceed to Test and Verify Tilt Circuit.

Test and Verify Tilt Circuit

Light Indicators

Set up button is located on this face next to harness

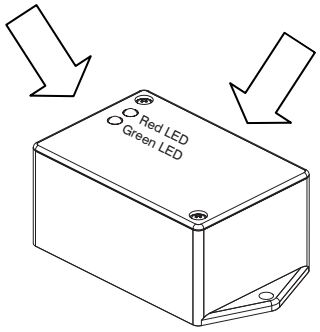

Operations of Tilt Switch

The following describes the LED's and what they indicate.

Green LED	Illuminated whenever both tilt axes are within the specified degrees of the zero/ home learned position. Flashes when transitioning in or out of tilt angle limits, but built in time delay has not fully occurred.
Red LED	Illuminated whenever tilt on one or more axes is more than the specified degrees out from the zero/ home position.
Green & Red LED	On together, no blinking when fault detected.

Tilt Circuit Test

1. Refer to section 5 for test tilt sensor procedure.

5.2-4 Pothole Limit Switches (LS4 & LS5) Replacement and Adjustment

Machine Preparation

1. Ensure the aerial platform is parked on a firm level surface.

2. Chock or block the wheels to keep the aerial platform from rolling forward or backward.

Limit Switch Removal

1. Raise the platform until the pothole bars are deployed.

2. Swing out the hydraulic tray and the battery tray to gain access to the pothole limit switches underneath the base.

3. Remove the bolts and nuts (x2) securing each limit switch to the pothole lock plate. Set the hardware aside for later reinstallation.

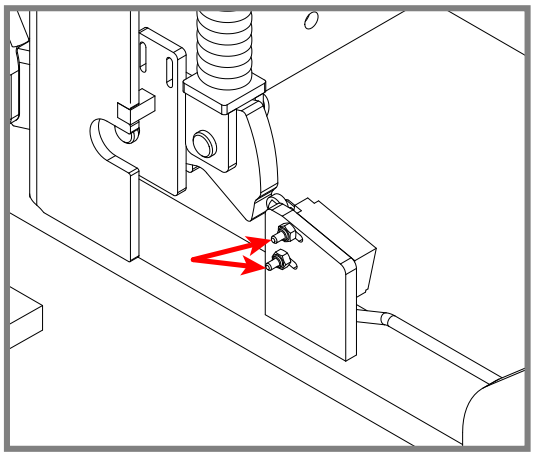

4. Remove the limit switch and free the limit switch cable by cutting the tie wraps.

5. Follow the cable into the electrical panel, and disconnect the limit switch wires from the electrical panel. Discard the limit switches.

Limit Switch Replacement

1. Mount loosely the new limit switch assemblies: 139228 (Battery Tray) & 139227 (Hydraulic Tray), using the hardware removed previously.

Limit Switch Electrical Connections

1. Route the new limit switch cable(s) along the same path as the old one(s) into the electrical panel cabinet. Use tie wraps as needed to secure them at regular intervals.

2 Strip the cable jacket back to separate the wires. Cut the wires to length if needed.

3. Strip the ends of wires 72-Black/White and 71-Black from the Battery Tray Limit Switch as well as wires 72-Black/White and 19-Black from the Hydraulic Tray Limit Switch and connect them to the electrical panel (refer to 3.18 Electrical Panel Wiring Diagram).

Limit Switch Setup

1. Loosen the hardware securing the limit switch to the pothole lock plate. Adjust and move the limit switch towards the lever bar until it makes contact inside the notch with the lever bar without depressing the plunger roller.

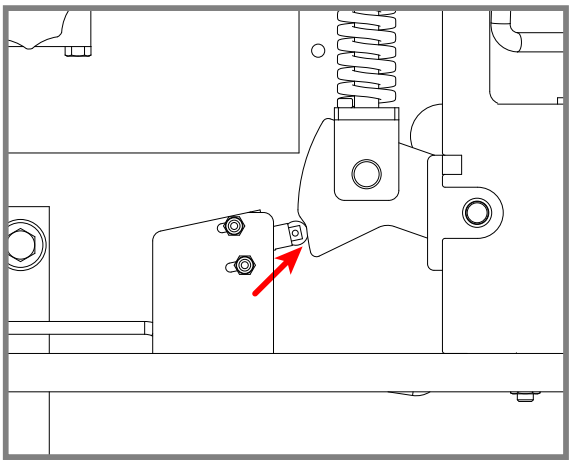

2. Fully tighten the bolts securing the limit switch. Ensure the limit switch does not move while tightening the bolts and the plunger roller retaining pin is fully visible.

Limit Switch Testing

1. Place a block, approximately 1.5” (3.75 cm), under the hydraulic/electric tray and then raise the platform to an approximate height of 7 feet (2 meters) or until the pothole protection is activated. Attempt to drive forward or reverse. Aerial platform should not move forward or backward.

5.2-5 Wheel Replacement and Torquing Procedure

Tools Needed

- Adjustable Torque Wrench
  Capacity 380 Nm (280 ft-lb)
- Hub Puller

Grease Application - New Rear Wheels with Pin Brakes Only (if required)

Model	Recommended Grease Type
SJIII 3215, SJIII 3219	STARPLEX EP2
	UNIREX EP2
	SHELL GADUS S2

1. If the bearings are provided separately, they will need to be coated in grease before installing on the rear wheels.

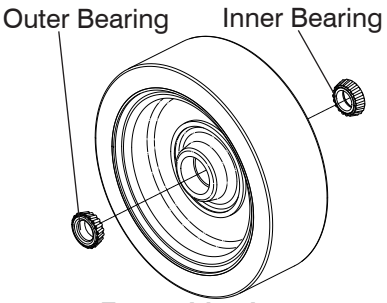

Front side shown

2. Thoroughly clean the bearings using solvent and allow them to dry.

3. Coat the inner and outer bearings with grease completely. Be careful not to contaminate the grease. This could cause internal damage and shorten the life span of the bearings. Contaminants include dust, dirt, sand, water or other foreign particles.

4. Install the inner and outer bearings. The grease should allow the bearings to stick to the bearing cups inside the wheel assembly.

NOTE

The inner bearing has a larger diameter than the outer bearing. When installing, ensure the bearings are inserted tapered-end first.

5. From the back side of the wheel, place the grease seal on the hub with the tapered end facing inwards.

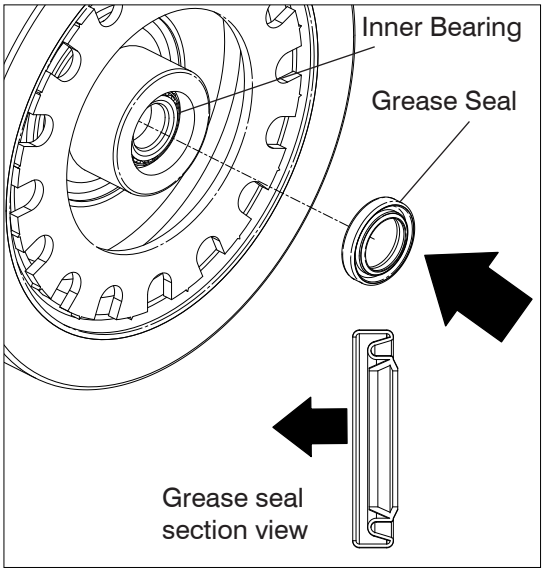

Back side shown

6. Lightly tap the grease seal into place using a hammer, protecting the grease seal with a flat piece of wood.

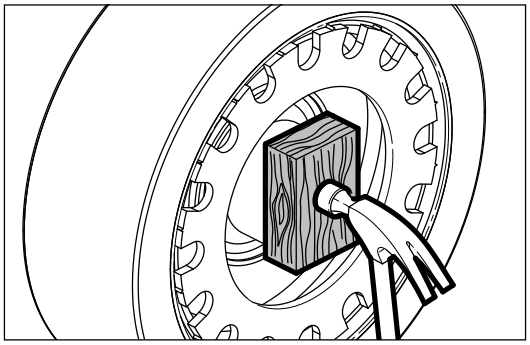

Hub/Integrated Hub Wheel Removal

1. Use an appropriately rated lifting device to raise up the MEWP until all the wheels are off the ground. Set the MEWP on stands adequately rated to support the weight of the machine.

2. Remove and set aside the wheel motor nut or castle nut.

3. Remove and discard the locktooth washer or cotter pin. A new one will be required for re-installating the hub/integrated hub wheel.

4. Use a hub puller to remove and discard the hub/integrated hub wheel from the wheel motor or brake.

5. For integrated hub wheels, use two 3/8”-24 bolts with a hub puller to remove the wheel.

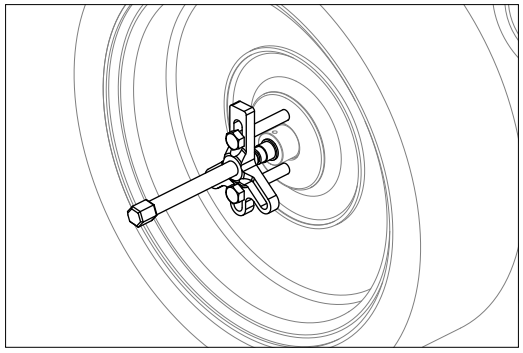

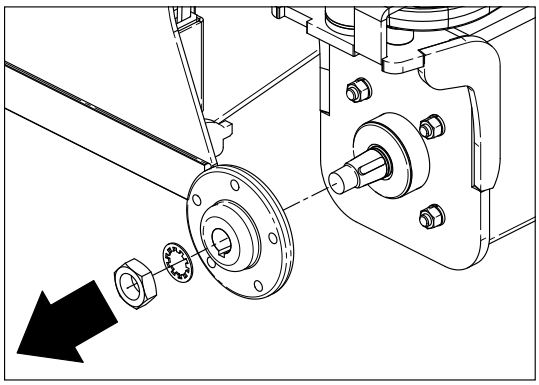

Remove Hub

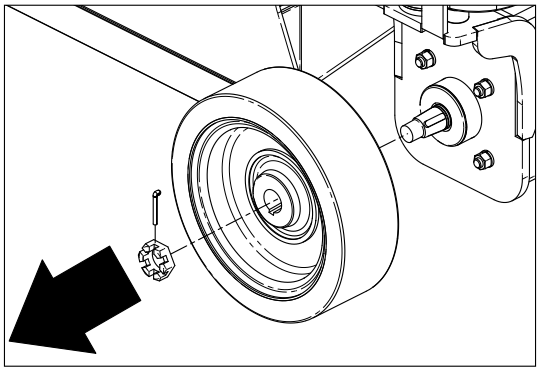

Remove Integrated Hub Wheel

Front Hub/Integrated Hub Wheel Installation

1. Install the hub/integrated hub wheel onto the spindle.
2. Secure the hub/integrated hub using a castle nut.
3. Tighten the castle nut to 203 Nm (150 ft-lb).
4. Insert a 1/8” x 1-1/2” cotter pin.
5. If the holes do not align to install the cotter pin, continue to torque the castle nut clockwise until the next hole is visible.
6. Ensure the cotter pin is pushed in completely.
7. Bend the ends of the cotter pin to secure the castle nut.

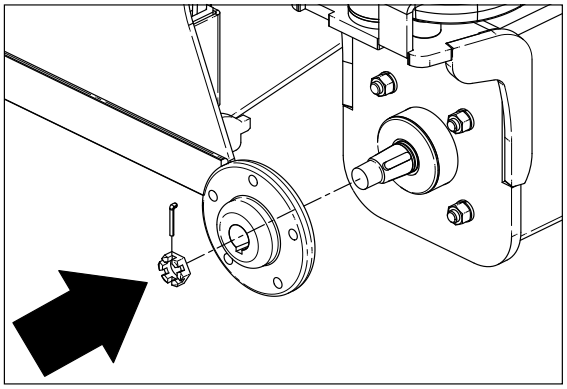

Hub Install

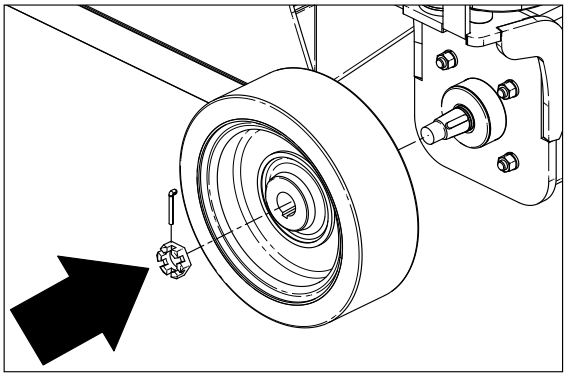

Integrated Hub Wheel Install

For integrated hub wheels only

8. To limit rust bleed, it is recommended that a few drops of grease be applied to the two small tapped holes on the front wheels.

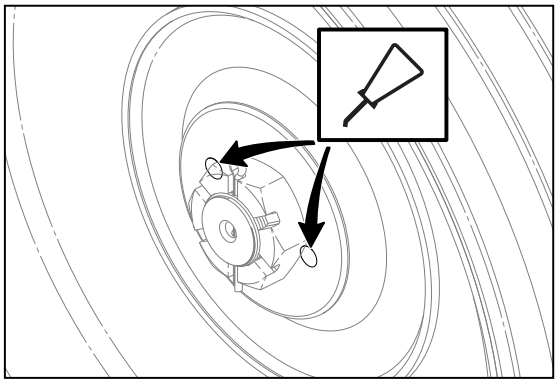

If using a wheel motor nut

9. Install a wheel motor nut and the new locktooth washer onto the hub/wheel.
10. Torque the wheel motor nut to 380 Nm (280 ft-lb).
11. Apply torque seal to the wheel motor nut.

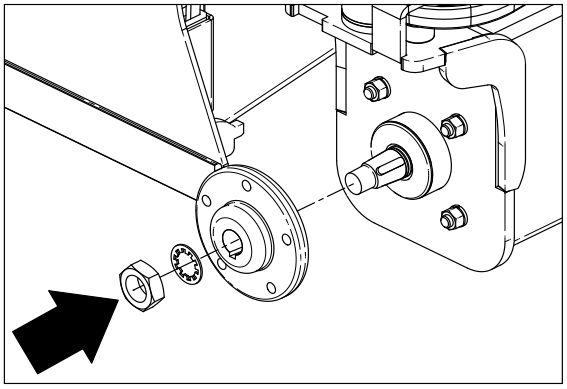

Hub Install

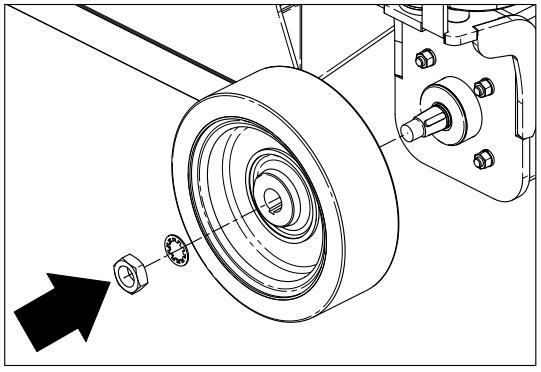

Integrated Hub Wheel Install

Rear Hub/Integrated Hub Wheel Installation - Pin Brakes

1. Install the hub/integrated hub wheel onto the spindle.
2. **Install the castle nut and the flat washer. Finger tighten the nut.**
3. For integrated hub wheels, use a wrench to manually disengage the pin brakes on both sides. This will allow you to rotate the wheel.
4. **Rotate the hub/wheel slowly while tightening the castle nut to approximately 68 Nm (50 ft-lb). This is to seat all the bearings in the wheel assembly.**

NOTE

Do not over-torque the castle nut as the bearing life would be reduced.

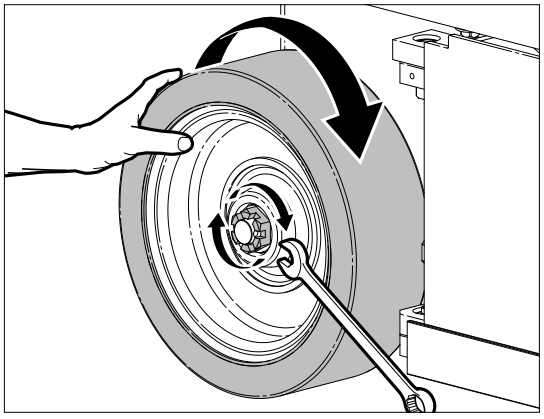

5. Loosen the castle nut to remove the torque. Do not rotate the wheel.
6. Finger tighten the castle nut until it is snug.

NOTE

The castle nut should be free to rotate, with the only restraint being the cotter pin.

7. Use a wrench to re-engage the pin brakes on both sides. Do not lower the machine while the pin brakes are disengaged.
8. **Tighten the castle nut 1/12 of a turn (30°) to the next cotter pin hole that is visible in the spindle. Ensure the cotter pin is visible in the spindle to allow the dust cap to fit.**
9. **Install a 1/8" x 1 1/2" cotter pin.**
10. **Bend the ends of the cotter pin to secure the castle nut.**
11. **Install the dust cap over the castle nut. Be sure not to damage the castle nut while installing the dust cap.**

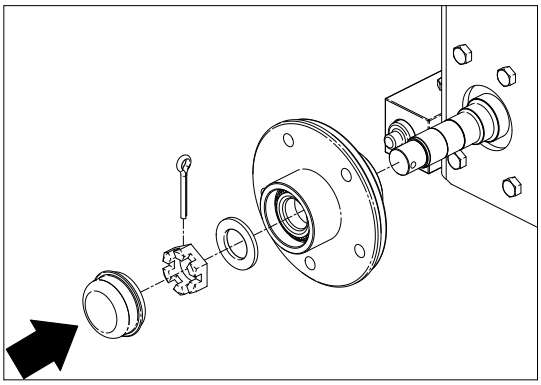

Hub Install

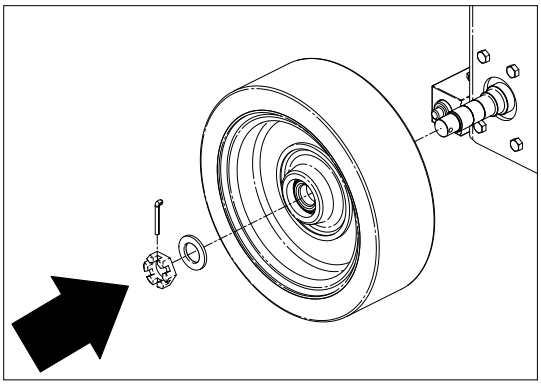

Integrated Hub Wheel Install

Rear Hub/Integrated Hub Wheel Installation

-

Wet Brakes

1. Install the hub/integrated hub wheel onto the spindle.
2. Install a 1” castle nut onto the brake.
3. Tighten the castle nut to 203 Nm (150 ft-lb) and insert the 1/8” x 1-1/2” cotter pin.
4. If the holes do not align to install the cotter pin, continue to torque the castle nut clockwise until the next hole is visible.
5. Ensure the cotter pin is pushed in completely.
6. Bend the ends of the cotter pin to secure the castle nut.

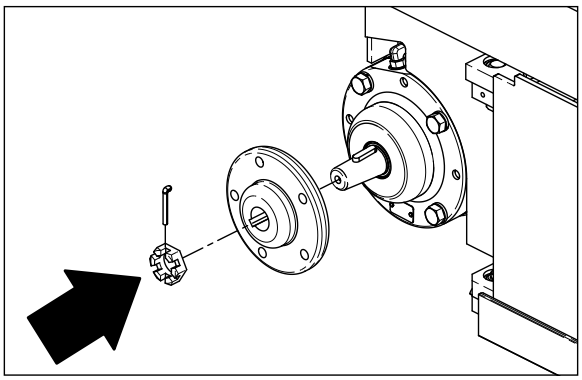

Hub Install

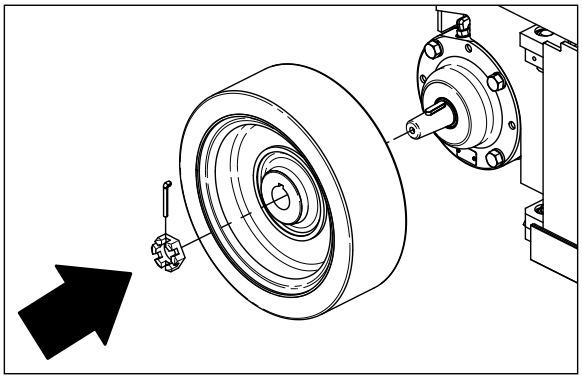

Integrated Hub Install

Wheel Installation (If applicable)

1. Install the wheel onto the hub.
2. Center the wheel mounting holes with the bolt holes from the hub.
3. **Secure the wheel using wheel bolts and hand tighten to center the rim.**

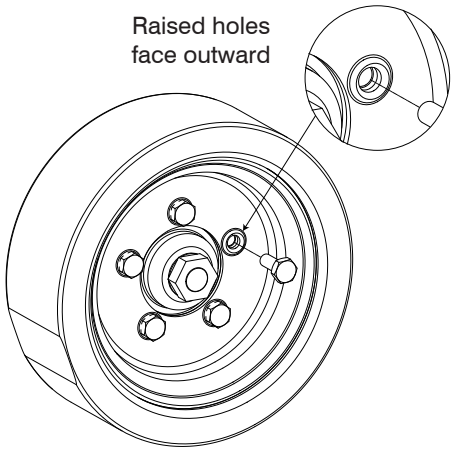

4. Torque the bolts to 68 Nm (50 ft-lb) in a criss-cross sequence.

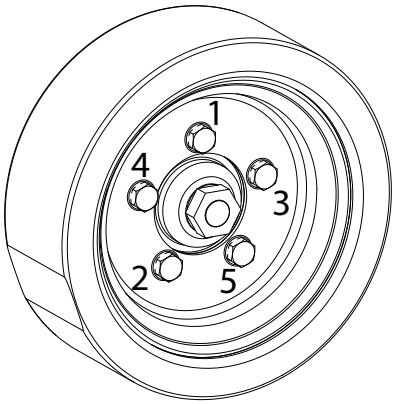

5. Torque the bolts again to 122 Nm (90 ft-lb) in a criss-cross sequence.
6. Repeat the tightening sequence to confirm that none have changed from 122 Nm (90 ft-lb). If any are found below 122 Nm (90 ft-lb), repeat complete sequence until there is no change in torque values. If possible, drive the machine prior to checking torques.
7. Apply dots of torque seal at the base of the wheel bolts.
8. Check torque values after 8 hours of operation.

5.2-6 Battery Maintenance

This section provides the operator with procedures on how to service and charge the battery. This also provides the charger operation instructions.

Servicing the battery

WARNING



Explosion hazard. Keep flames and sparks away. Do not smoke near batteries. Battery acid releases explosive gas while charging. Charge batteries in a well-ventilated area.

WARNING

Battery acid is extremely corrosive – wear proper eye and facial protection as well as appropriate protective clothing. If contact occurs, immediately flush with cold water and seek medical attention.

1. Turn the main power disconnect switch to the off position.
2. Check the battery case for damage.
3. Check the battery fluid level in each battery. If the plates are not covered by at least 13 mm (1/2 in) of solution, add distilled or demineralized water.
4. Make sure all the battery connections are tight.

NOTE

Do not use any batteries other than the flooded lead-acid batteries of the proper Ah rating.

WARNING

Use the original or equivalent to the original parts and components for the MEWP.

5.2-7 Charger Maintenance - Delta-Q

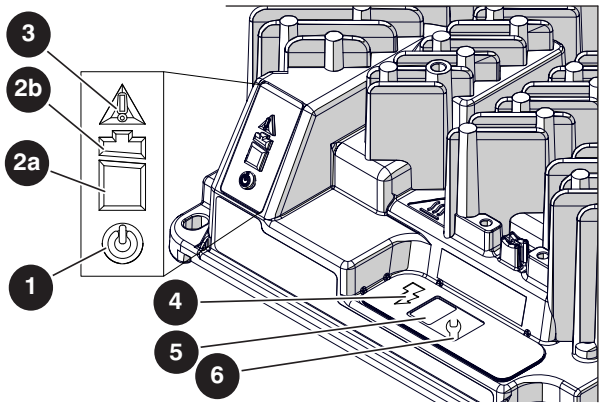

No.	Indicator type	State	Description/action required
1	AC power	Blue	Battery charger is connected to the AC power.
2a	Battery charging <80%	Flashing green	Low charge— continue charging.
		Solid green	High charge— continue charging.
2b	Battery charging >80%	Flashing green	High charge— can discontinue charging.
		Solid green	Charge complete— discontinue charging.
3	Fault/ error	Solid red	Charger fault—refer to the service manual.
		Flashing amber	Error encountered— refer to the service manual.
4	Charging output	Solid yellow	Charger output is active.
5	Charge profile/ error display	Current algorithm or fault/ error code	N/A.
6	Select charge profile	Current charging algorithm	N/A.

Charger Profiles

IMPORTANT

Charge profiles differ depending on the battery type and manufacturer. Only use charge profiles with the batteries they were designed for. Using other incompatible batteries may cause poor charging performance and a decreased battery health.

1. Place the charger near a power outlet, but leave it unplugged.
2. Find your battery type in the following chart, and make a note of the profile number (starting with P).
3. Press and hold the Select Charger Profile button (wrench icon) on the Delta-Q charger. You will hear a small click when you press the button.
4. Continue to hold the Select Charger Profile button, and connect the charger to a power outlet.
5. Continue to hold the button for approximately 10 seconds or until the Error Indicator turns orange and the Battery Charging Indicator starts flashing green.
6. The current charger profile displays up to three times.

NOTE

The process times out and the profile remains unchanged if there are 15 seconds of inactivity, or if the charging profile is allowed to display three times.

7. Press and release the button to scroll through the charging profiles.
8. Select a profile, and press and hold the button for 10 seconds or until the Error Indicator and Battery Charging Indicator lights turn off.
9. Press the button again to confirm the selected profile.
10. Disconnect the charger from the power outlet.

Battery Brand	Compatible with	Profiles
U.S. Battery - US 2200 XC/XC2 Flooded, 6V, 232 Ah	200 - 255 Ah flooded	#11 (P-0-1-1)
Discover Energy - EVGC6A-A AGM, 6V, 220 Ah	220 - 400 Ah AGM	#43 (P-0-4-3)
Discover Energy - EV12A-A AGM, 12V, 140 Ah*		
U.S. Battery - US 12V XC2 Flooded, 12V, 155 Ah*	330 - 425 Ah flooded	#73 (P-0-7-3)
U.S. Battery - US 250 XC/XC2 Flooded-lead, 6V, 255 Ah		
Trojan - T105 ELPT Flooded, 6V, 225 Ah	150 - 250 Ah 6V, 8V, 12V flooded	#3 (P-0-0-3)

*The batteries used for these charger profiles are connected in a series-parallel circuit.

Charger Troubleshooting

The IC Series charger is continuously monitoring itself and its environment for unusual conditions. There are a few indications that may require the user's attention.

Symptom	Recommended Action
No Indicator Lights	Check AC voltage and connection to wall power.
Only Blue AC Light On	Charger is connected to AC and is waiting for a battery to be connected, or for CAN remote control commands. Battery voltage must rise over 0.1V/cell before charging will begin. Some charging algorithms require a higher battery voltage to begin.
Solid Red Fault/Error Indicator	Read fault code (e.g., F-0-0-1) number on the Charge Algorithm/Error Display and refer to the fault code table.
Flashing Amber Fault/Error Indicator	Read error code (e.g., E-0-0-1) number on the Charge Algorithm/Error Display and refer to the error code table.

Charger Fault Codes

Fault Code	Description	Troubleshooting/Customer Actions
F-0-0-1	DC-DC Failure: LLC excessive leakage fault.	Internal charger fault. Disconnect AC and battery from charger for a minimum of 30 seconds. If it fails again, contact Skyjack service.
F-0-0-2	Power Factor Correction (PFC) Failure: PFC excessive leakage fault.	
F-0-0-3	PFC has taken too long to boost.	
F-0-0-4	The charger has been unable to calibrate the current offset.	
F-0-0-5	The voltage drop across the DC relay is too high while the relay is closed.	
F-0-0-6	Large difference between internal DC-DC and battery sense currents.	

Charger Error Codes

Fault Code	Description	Troubleshooting/Customer Actions
E-0-0-1	Battery voltage over limit in software. Typically 2.5V/cell. At the start of a charger cycle only and only for lead acid batteries. It is acceptable for the voltage to go above this during charging and when charging Lithium batteries.	▪ Check the battery voltage and cable connections. ▪ Check charger voltage model is appropriate for batteries. ▪ This error automatically clears once the condition has been corrected.
E-0-0-2	Battery voltage too low to start a charge cycle. Algorithm dependent. Typically 0.1V/cell.	▪ Check the battery voltage and cable connections. ▪ Check the charger is the correct voltage for the batteries it is connected to. ▪ Check battery size and condition. Batteries may be overdischarged. Use another charger to bring the batteries above the minimum voltage. ▪ This error automatically clears once the condition has been corrected.
E-0-0-3	Charge time limit reached. Algorithm dependent.	▪ Charger output reduced due to high temperatures. Operate at lower ambient temperature. ▪ Charger output reduced due to low AC voltages. Check AC voltages. ▪ Check for shorted or damaged cells. ▪ Poor battery health. Replace the battery. ▪ Batteries too large for the charger. Replace batteries. ▪ Very deeply discharged battery. Retry charge. ▪ Battery connections are loose or corroded. Check connections. ▪ Extra loads. Turn off other devices running on the battery ▪ This error automatically clears once the charger is reset by cycling DC or by loss of AC for over 10 minutes.
E-0-0-4	Battery could not be trickle charged up to the minimumvoltage. May also be used for other battery-related errors depending on the algorithm.	▪ Check for shorted or damaged cells. ▪ Poor battery health. Replace the battery. ▪ Check DC connections. ▪ May be caused because of output reduced due to high temperature. ▪ Some new batteries may trigger these alarms as there voltage dips ▪ when charging starts before it goes onto rise.
E-0-0-7	Charge amp-hour Limit reached. Algorithm dependent.	▪ Charger output reduced due to high temperatures. Operate at lower ambient temperature ▪ Charger output reduced due to low AC voltages. Check AC voltage. ▪ Check for shorted or damaged cells. ▪ Poor battery health. Replace the battery. ▪ Very deeply discharged battery. Retry charge. ▪ Battery connections are loose or corroded. Check connections. ▪ Extra loads. Turn off other devices running on the battery ▪ This error automatically clears once the charger is reset by cycling ▪ DC or by loss of AC for over 10 minutes.

E-0-0-8	Battery temperature out of range. Algorithm dependent.	▪ Cool or warm batteries as needed. ▪ Check temperature sensor and connections. ▪ This error automatically clears once the condition has been corrected.
E-0-1-1	Charge disabled by external command	▪ Charger has been disabled by an external controller over the CANbus network. ▪ This error automatically clears once the command has been removed.
E-0-1-2	Reverse polarity	▪ Battery is connected the wrong way around. Check the battery connections. ▪ This error automatically clears once the condition has been corrected.
E-0-1-3	Battery does not take current	▪ Check for an electrical component or loose connection between the charger and the battery. ▪ When charging lithium batteries, make sure the charger is properly connected to the battery and battery management system. ▪ This error automatically clears once the charger is disconnecting DC or AC.
E-0-1-9	Hardware build does not support software version	▪ The charger hardware does not support the new software version. ▪ Existing SW is left running. Contact Delta-Q Technologies.
E-0-2-0	No active algorithm selected	▪ Reprogram the charger with its original software, algorithms, and settings. ▪ Use the wrench button to select the correct algorithm if still available on the charger. ▪ The problem clears automatically when an available algorithm is set on the charger, as default.
E-0-2-1	High battery voltage while charging. Algorithm dependent. Typically 2.8V/cell.	▪ When already charged, some new batteries may exhibit this error. ▪ Disconnect the battery connection and wait for the battery voltage to fall. Reconnect the batteries to see if the condition reoccurs. ▪ Check battery size and condition. Batteries in poor condition, with a high internal resistance, may cause this error. New batteries, if charged when already full, may also cause this error. Disconnect and reconnect the batteries a few times. ▪ Check the battery voltage and cable connections. ▪ This error automatically clears once the condition has been corrected.

E-0-2-2	Low battery voltage while charging. Algorithm dependent. Typically 0.1V/cell.	▪ Another device may be drawing current from the battery. ▪ Check the battery voltage and cable connections. ▪ Check battery size and condition. Batteries may be overdischarged. ▪ Use another charger to bring the batteries above the minimum voltage. ▪ This error automatically clears once the condition has been corrected.
E-0-2-3	High AC voltage error (>270 VAC)	▪ AC voltage is too high. Connect charger to an AC source that has a stable AC voltage between 85 and 270 VAC/45-65 Hz. ▪ In newer software versions this does not prevent charging. ▪ This error will automatically clear once the condition has been corrected.
E-0-2-4	Charger failed to turn on properly	▪ Disconnect AC input and battery for 30 seconds. If the error persists, contact Delta-Q Technologies.
E-0-2-5	AC voltage has dipped below 80 VAC 3 times in 30 seconds	▪ AC source is unstable. This could be caused by an undersized generator and/or input cables that are too long or too small. ▪ Connect the charger to an AC source with a stable AC voltage between 85 and 270 VAC/45-65 Hz. ▪ This error will automatically clear once the condition has been corrected.
E-0-2-8	Attempt to select algorithm incompatible with this software	▪ Update charger software, continue to use existing algorithm* or select a different charging algorithm that is compatible. *** Notes** ▪ If selecting a different algorithm, the existing algorithm will remain in the charger. ▪ If upgrading an existing algorithm, the existing algorithm will be deleted. Contact Delta-Q Technologies for a software upgrade to run the new algorithm.
E-0-2-9	Cannot transmit on CAN bus	▪ Check the physical CAN connector, electrical bus conditions, and other CAN modules for correct functioning. For example, check that termination resistance is approximately 60 ohms.
E-0-3-0	CAN heartbeat timeout on Battery module	▪ May be caused by a missing heartbeat message. Check the CAN bus battery module for correct function. ▪ This error automatically clears once the condition has been corrected.
E-0-3-1	The Vref for the ADC measurements has triggered an alarm	▪ Internal charger error. Disconnect AC and the battery for a minimum of 30 seconds and retry. ▪ If the problem persists, contact Delta-Q Technologies. ▪ This error automatically clears once the condition has been corrected.

E-0-3-2	CAN Heartbeat Lost	▪ An error was detected with the CAN heartbeat communications with a registered node being guarded. ▪ Check the networked CANbus device(s) for correct functioning. ▪ This alarm does not display or get logged on the charger but does appear on the CAN bus via an emergency message.
E-0-3-6	Battery temperature sensor is missing or shorted	▪ Check sensor connections. ▪ The charger behavior when this fault occurs can be configured. OEMs may contact Delta-Q Technologies for more information. ▪ This error automatically clears once the condition has been corrected.
E-0-3-8	Fan will not turn	(Fan-equipped models only) ▪ Check fan connections. ▪ Check to make sure the fan turns freely and is not obstructed. ▪ This error automatically clears once the condition has been corrected.
E-0-4-0	Fan voltage pulled low	(Fan-equipped models only) ▪ Check to make sure the fan turns freely.
E-0-4-5	Battery disconnected	▪ Battery disconnected ▪ Reconnect the battery or check the wiring
E-0-4-6	Invalid PDO Length	▪ Check to make sure all PDOs are valid length. ▪ This error automatically clears once the condition has been corrected
E-0-4-7	Platform overvoltage alarm	▪ A battery or some other source has been connected to the charger that exceeds the hardware's design limits.

Scissors

5.3-1 High Speed Cutout (LS1B) & Deceleration (LS7) Limit Switches Replacement and Adjustment

Model 3215: LS1B & LS7
Model 3219: LS1B

Machine Preparation

1. Ensure the aerial platform is parked on a firm level surface.

2. Chock or block the wheels to keep the aerial platform from rolling forward or backward.

Limit Switch Removal

1. Raise the platform to give access to the limit switch cable, and deploy the maintenance stand.

2. Turn the emergency main power disconnect switch to the OFF position.

3. Remove the gear clamp securing the limit switch cover, and slide the limit switch cover off of the pin. Set aside the clamp for reinstallation later.

4. Remove the bolts, washers, and nuts (x2) securing the limit switch to the cover. Set the cover and hardware aside for reinstallation later.

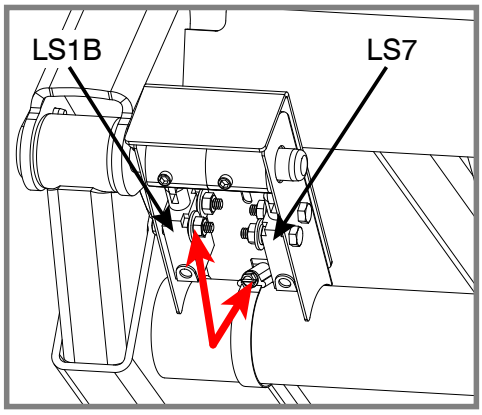

5. Remove the limit switch(es) and free the limit switch cable(s) by cutting the tie wraps.

6. Follow the cable into the plug and disconnect it from the rear harness. Discard the limit switch(es).

Limit Switch Replacement

1. Mount the new limit switch assembly using the hardware removed previously.

   NOTE: High Speed Cutout Limit Switch (LS1B) is the one closest to the scissor arm.

2. Slide the limit switch cover back onto the pin. Secure it with the gear clamp removed previously.

Limit Switch Electrical Connections

1. Route the limit switch cable(s) along the same path as the old one(s) into the 4-pin connector in the rear harness. Use tie wraps as needed to secure them at regular intervals.

2. Stow the maintenance stand and fully lower the platform.

Limit Switch Cam Setup

1. Turn the emergency main power disconnect switch to the ON position.

2. Attach the end of a measuring tape to the side of the platform with a tie wrap, in such a way that the measuring tape will hang down freely to the ground. **Note:** The end of the measuring tape should be level with the standing surface of the platform.

3. **For High Speed Cutout Limit Switch:** Raise the platform until the distance from the standing surface of the platform to the ground measures 78” **(Model 3215)** or 90” **(Model 3219)**.

4. Loosen the set screws (x2) on the High Speed limit switch cam, and rotate the cam until it depresses the limit switch plunger and a click is heard inside the limit switch.

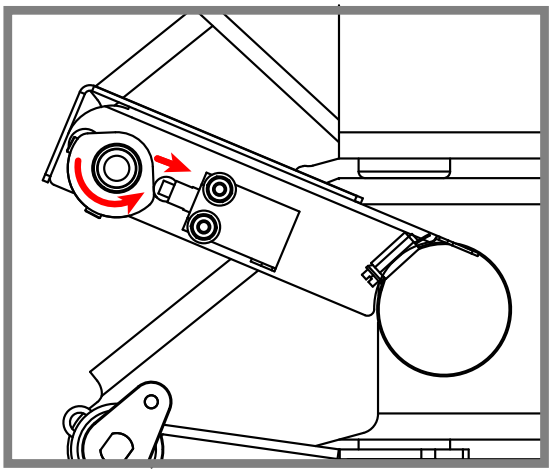

5. **For Deceleration Limit Switch (Model 3215 only):** Raise the platform until the distance from the standing surface of the platform to the ground measures 49”.

6. Loosen the set screws (x2) on the Deceleration limit switch cam, and rotate the cam until it depresses the limit switch plunger and a click is heard inside the limit switch.

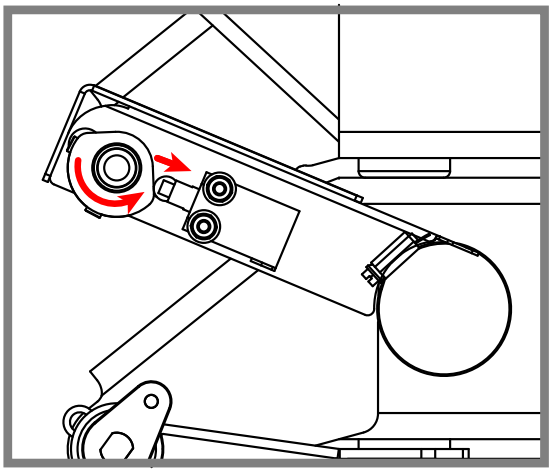

7. Fully lower the platform.

Limit Switch Testing

1. **For High Speed Cutout Limit Switch:** Raise the platform less than 75” **(Model 3215)** or 87” **(Model 3219)**, and drive the unit at full speed**.** The unit should move at high speed. Then raise the platform over 81” **(Model 3215)** or 93” **(Model 3219)**. The unit should automatically switch from high speed to low speed. **Note:** High Speed Cutout should occur within the tolerance zone of 75” to 81” **(Model 3215)** or 87” to 93” **(Model 3219)**.

2. **For Deceleration Limit Switch (Model 3215 only):** Move the controller all the way backward to lower the platform. When the platform reaches the height of 49”, the deceleration speed should noticeably drop until platform reaches fully lowered position.

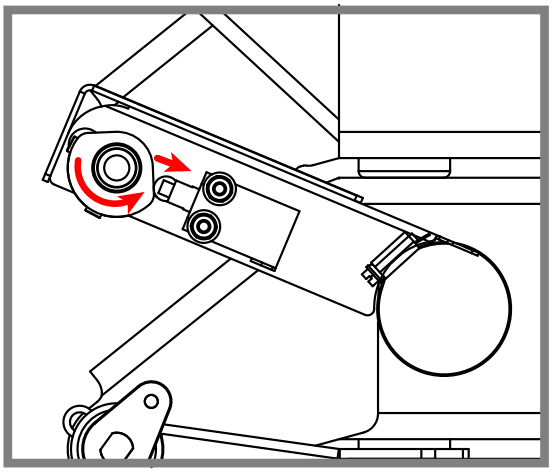

5. **For Deceleration Limit Switch (Model 3215 only):** Raise the platform until the distance from the standing surface of the platform to the ground measures 49”.

6. Loosen the set screws (x2) on the Deceleration limit switch cam, and rotate the cam until it depresses the limit switch plunger and a click is heard inside the limit switch. Apply a small amount of Loctite to both set screws, and tighten them.

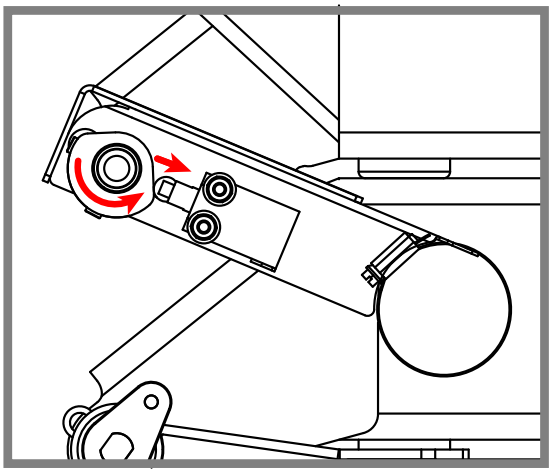

7. Fully lower the platform.

Limit Switch Testing

1. **For High Speed Cutout Limit Switch:** Raise the platform less than 75" **(Model 3215)** or 87" **(Model 3219)**, and drive the unit at full speed**.** The unit should move at high speed. Then raise the platform over 81" **(Model 3215)** or 93" **(Model 3219)**. The unit should automatically switch from high speed to low speed. **Note:** High Speed Cutout should occur within the tolerance zone of 75" to 81" **(Model 3215)** or 87" to 93" **(Model 3219)**.

2. **For Deceleration Limit Switch (Model 3215 only):** Move the controller all the way backward to lower the platform. When the platform reaches the height of 49", the deceleration speed should noticeably drop until platform reaches fully lowered position.

Section 6 - APPENDIX A

Motor Controller Option

This section is based on Serial Numbers:

SJIII 3215	10 001 107 & Above
SJIII 3219	22 070 875 & Above

Section 6 - APPENDIX A

Parts List

6.1 Electrical Component Parts List....128

Diagrams and Schematics

6.2 Platform Control Console Diagram - Motor Controller....129
6.3a Electrical Panel Diagram - Motor Controller....130
6.3b Electrical Panel Diagram - Motor Controller....131
6.4 Electrical Panel M/C with Inverter Option....132
6.5 Main Manifold Harness - Motor Controller....133
6.6 Hydraulic Schematic - Motor Controller....134
6.7a Electrical Schematic - Motor Controller....135
6.7b Electrical Schematic - Motor Controller....136

Troubleshooting

Introduction - Troubleshooting....138

Electrical System

6.7-1 All Controls Inoperative....139
6.7-2 All Controls Except for Down Function Inoperative....140
6.7-3 All Controls Inoperative From Base Control Console....140
6.7-4 No Up Function from Base Control Console....140
6.7-5 Up Function Slow from Base Control Console....141
6.7-6 No Down Function from Base Control Console....141
6.7-7 All Controls Inoperative From Platform Control Console....142
6.7-8 No Up Function from Platform Controls....142
6.7-9 Up Function Slow from Platform Control Console....143
6.7-10 No Down Function from Platform Controls....143
6.7-11 Steer Only Inoperative....143
6.7-12 Right Steer Inoperative....144
6.7-13 Left Steer Inoperative....144
6.7-14 Drive Only Inoperative....144
6.7-15 No Drive or Steer when Platform Fully Lowered....144
6.7-16 No Drive or Steer when Platform Elevated....145
6.7-17 Platform Drives in Slow Speed Only....145
6.7-18 Brake will not Release....145
6.7-19 Forward Drive Function Inoperative....145
6.7-20 Reverse Drive Function Inoperative....146

Hydraulic System

6.8-1 All Function Inoperative....146
6.8-2 All System Sluggish....146
6.8-3 Platform Drifts Down....146
6.8-4 Platform Lifts Slowly....146
6.8-5 Platform does not Lift....146
6.8-6 Platform will not Lower....147
6.8-7 Platform Lowers Slowly (3215 only)....147
6.8-8 Platform Drives Slow....147
6.8-9 Platform will not Drive in Forward or Reverse....147
6.8-10 Brake(s) will not Release....147
6.8-11 Platform does not Steer....147

Table of Contents

Service & Maintenance

General....148
Safety and Workmanship....148

Platform

6.9-1 OEM Controller Electronics Information....148
6.9-2 OEM Controller Troubleshooting....149
6.9-3 OEM Controller Switch Wiring....150
6.9-4 Gate Spring Hinge Adjustment....151

Base

6.9-5 System Relief Pressure Adjustment....152
6.9-6 Lift Pressure Adjustment....152
6.9-7 Resistor - Voltage Divider....153

AK

6.1 Electrical Component Parts List

Index No.	Skyjack Part No.	Qty.	Description
17ACR	108589	1	RELAY, 24 Volt (Cushion)
14CR	108589	1	RELAY, 24 Volt (Lift Speed)
14CR1	108589	1	RELAY, 24 Volt (Lift Speed 2)
59JCR	108589	1	RELAY, 24 Volt (Base Control)
MB10	136419	1	BLOCK, Manifold (Deceleration valve) **(Model 3215)**
	199550	1	BLOCK, Manifold (Deceleration valve) **(Model 3215)**
RST1	119629	1	RESISTOR, (2.7K Ohms)
RST2	166234	1	WIRE, Motor Controller (4.50” / 100 OHM)
	163208	1	• RESISTOR,100 Ohms
RST3	169101	1	WIRE, Motor Controller (5.00” / 806 OHM)
	168986	1	• RESISTOR, 806 Ohms
RST4	166236	1	WIRE, Motor Controller (3.50” / 68 OHM)
	151647	1	• RESISTOR, 68 Ohms
RST5	166237	1	WIRE, Motor Controller (3.00” / 2.2 KOHM)
	151644	1	• RESISTOR, 2.2k Ohms
RST6	166238	1	WIRE, Motor Controller (3.00” / 1.2 KOHM)
	163253	1	• RESISTOR, 1.2k Ohms
RST7	163238	1	RESISTOR, Voltage Divider Resistor (270 Ohms)
RST8	156564	1	RESISTOR, 1.5 Ohms
LS4	199452	1	LIMIT SWITCH, Pothole protection (Battery tray)
LS5	199451	1	LIMIT SWITCH, Pothole protection (Hydraulic tray)
S7	159111	1	JOYSTICK, Motor Controller
S7-1	122869	1	SWITCH, Neutral
S7-2	159613	1	SWITCH, Right Steer
S7-3	159613	1	SWITCH, Left Steer
S7-6	159067	1	SWITCH, Pushbutton - Enable
TT	195940	1	HOURMETER, Digital
C1	146475	1	CONTACTOR, Solenoid (hydraulic proportional control)
	165865	1	CONTACTOR, Solenoid (Motor controller/MC models)

6.2 Platform Control Console Diagram - Motor Controller

AF

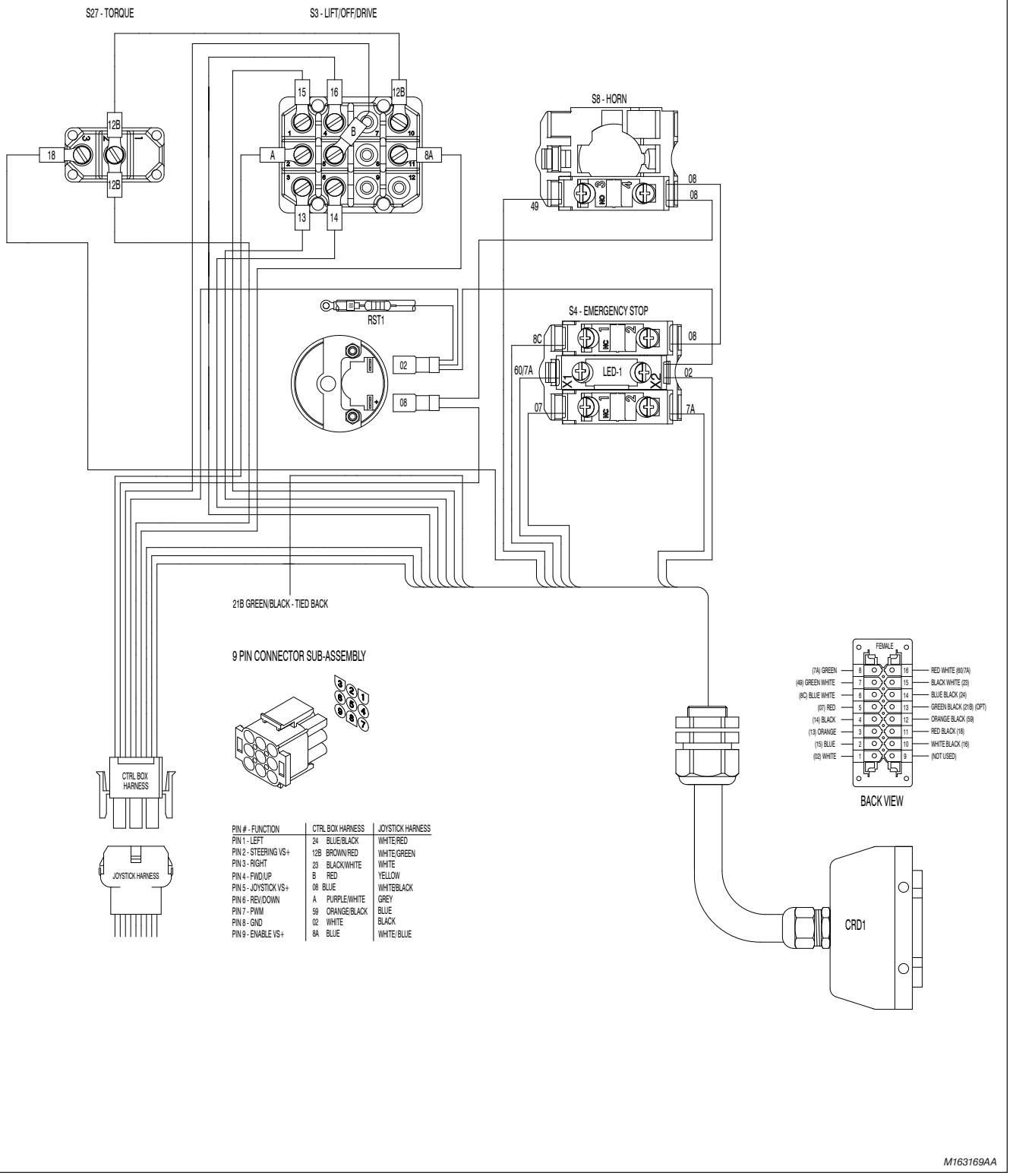

PIN # - FUNCTION	CTRL BOX HARNESS	JOYSTICK HARNESS
PIN 1 - LEFT	24 BLUE/BLACK	WHITE/RED
PIN 2 - STEERING VS+	12B BROWN/RED	WHITE/GREEN
PIN 3 - RIGHT	23 BLACK/WHITE	WHITE
PIN 4 - FWD/UP	B RED	YELLOW
PIN 5 - JOYSTICK VS+	08 BLUE	WHITE/BLACK
PIN 6 - REV/DOWN	A PURPLE/WHITE	GREY
PIN 7 - PWM	59 ORANGE/BLACK	BLUE
PIN 8 - GND	02 WHITE	BLACK
PIN 9 - ENABLE VS+	8A BLUE	WHITE/ BLUE

6.3a Electrical Panel Diagram - Motor Controller

A	B	C	D	E	F	G	H

Serial Breakdown Reference Chart	
Model	**Serial Number**
SJIII 3215	10001533 & below
SJIII 3219	22093185 & below

LEGEND:
- TO JOYSTICK BOX
- TO LOWER KEYSWITCH BOX
- TO TERMINAL BLOCK
- TO TILT SWITCH
- TO ENGINE
- TO BATTERY
- TO MAIN MANIFOLD
- TO HIGH SPEED LIMIT SWITCH
- TO REAR MANIFOLD
- TO POWER DECK
- TO OUTRIGGER SOLENOID CABLES
- TO END OF STROKE
- TO FLASHER
- TO HORN/FLASHING LIGHT

BACK VIEW

02 - WHITE
8C - WHITE/BLACK
19A - RED/WHITE

PIN 1 - 07 (RED)
PIN 2 - 3A (BLUE)
PIN 3 - 13 (ORANGE)
PIN 4 - 14E (BLACK)
PIN 5 - N/U
PIN 6 - 8C (WHITE/BLACK)
PIN 7 - 7A (GREEN)
PIN 8 - 02 (WHITE)

PIN 1 - 71 (BLUE/BLACK)
PIN 2 - 21 (GREEN/BLACK)
PIN 3 - 13 (ORANGE)
PIN 4 - 13A (GREEN/WHITE)

TO CHARGER CUTOUT
TO LOWER BASE CTRL

TO HIGH SPEED LIMITS
TO SOFT STOP LIMIT SWITCH

BLUE
YELLOW

TIED BACK:
- RED/BLACK
- BLUE/WHITE
- ORANGE/BLACK
- BLACK/WHITE

MAIN MANIFOLD
00 - WHITE
02 - WHITE
03 - BLUE(14AWG)
13 - ORANGE
13A - ORANGE
14 - BLACK
15 - BLUE
16 - WHITE/BLACK
17 - BLUE/RED
19A - WHITE/RED
23 - BLACK/WHITE
24 - BLUE/BLACK
25 - ORANGE/GREEN
59I - ORANGE/BLACK

BATTERY TRAY
72 - BLACK/WHITE
71 - BLACK

HYDRAULIC TRAY
72 - BLACK/WHITE
19 - BLACK

28CR
TILT SWITCH RELAY
PIN 30 - 19
PIN 85 - 02
PIN 86 - 28
PIN 87 - 19A
PIN 87a - 28A

17ACR
CUSHION RELAY
PIN 30 - 17B
PIN 85 - 02
PIN 86 - 17A
PIN 87 - 25
PIN 87a - N/U

17CR
STEER RELAY
PIN 30 - 17D
PIN 85 - 02
PIN 86 - 17
PIN 87 - N/U
PIN 87a - 17C

17CR1
TRANSFER RELAY
PIN 30 - 7A
PIN 85 - 02
PIN 86 - 17
PIN 87 - 17A
PIN 87a - 17B

21ACR
HIGH SPEED RELAY
PIN 30 - 59B
PIN 85 - 02
PIN 86 - 21A
PIN 87 - 59E
PIN 87a - 59F

14CR
LIFT SPEED RELAY
PIN 30 - 59
PIN 85 - 02
PIN 86 - 14
PIN 87 - 59A
PIN 87a - 59B

14CR1
LIFT SPEED RELAY 2
PIN 30 - 7A
PIN 85 - 02
PIN 86 - 14
PIN 87 - 59D
PIN 87a - 59C

59JCR
BASE CONTROL RELAY
PIN 30 - 59I
PIN 85 - 02
PIN 86 - 59J
PIN 87 - 59H
PIN 87a - 59G

22 AND 29 - TO FLASHER IF EQUIPPED OTHERWISE TIE BACK

MALE

GREEN (7A)	8	16	(OPT) RED WHITE
GREEN WHITE (49)	7	15	(23) BLACK WHITE
BLUE WHITE (8C)	6	14	(24) BLUE BLACK
RED (07)	5	13	(OPT) GREEN BLACK
BLACK (14)	4	12	(59) ORANGE BLACK
ORANGE (13)	3	11	(18) RED BLACK
BLUE (15)	2	10	(16) WHITE BLACK
WHITE (02)	1	9	(NOT USED)

TO MAIN MANIFOLD
MAIN MANIFOLD (63')
PLATFORM CONTROL BOX (43')
REAR HARNESS
TILT SWITCH
HORN/FLASHING LIGHT

TO TILT SWITCH
PIN 1 - 19 (BLACK)
PIN 2 - 28 (GREEN)
PIN 3 - 02 (WHITE)
PIN 4 - N/U

TO FLASHING LIGHT
02 - WHITE
22 - GREEN

TO HORN
02 - WHITE
49 - BLACK

M170074AC1

6.3b Electrical Panel Diagram - Motor Controller

AM

Serial Breakdown Reference Chart	
Model	**Serial Number**
SJIII 3215	10001534 & above
SJIII 3219	22093186 & above

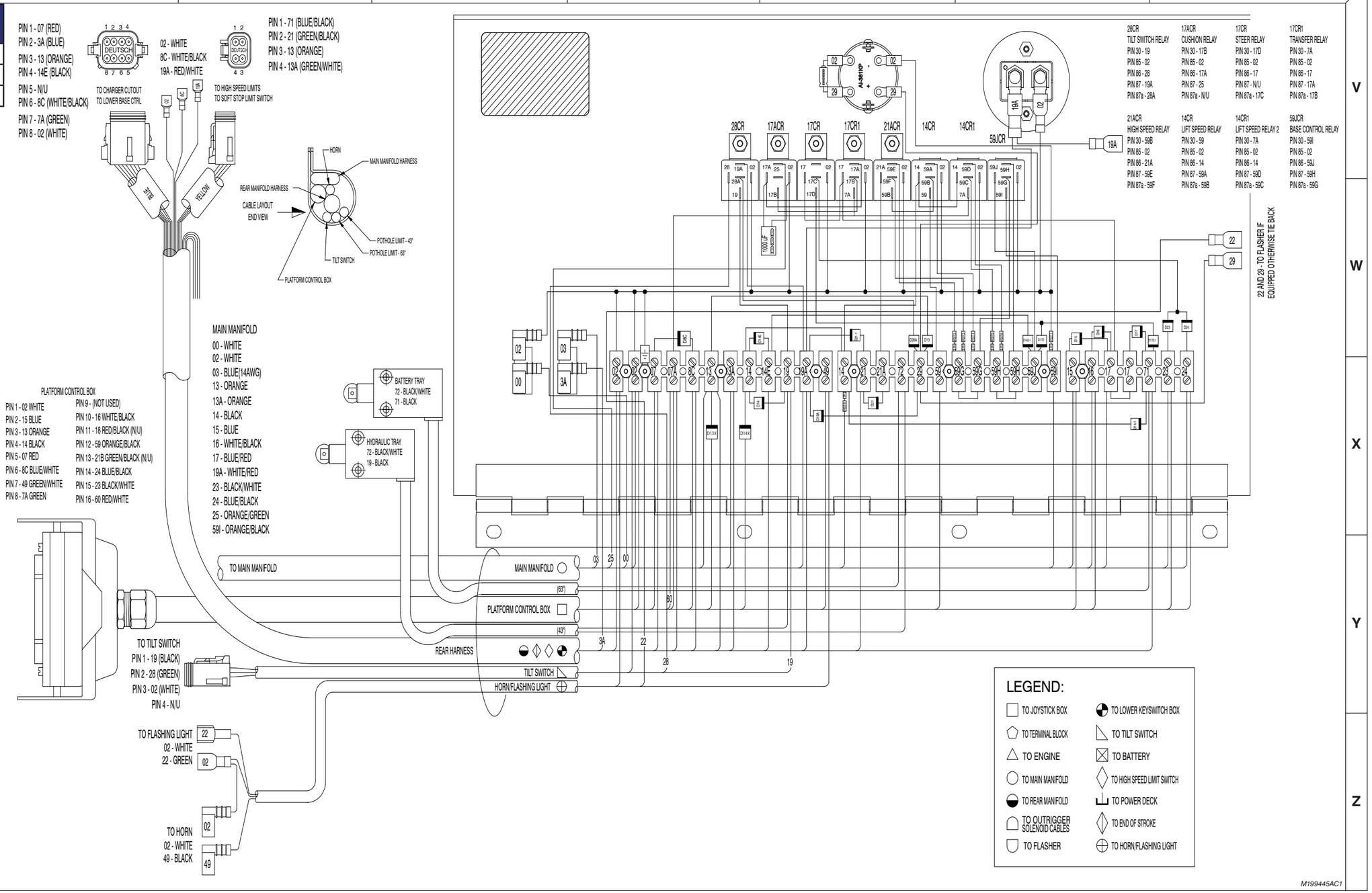

6.4 Electrical Panel M/C with Inverter Option

A	B	C	D	E	F	G	H

Serial Breakdown Reference Chart	
Model	**Serial Number**
SJIII 3215	10001534 & above
SJIII 3219	22093186 & above

TIMER RELAY

PIN COM - 02 WHITE
PIN PWR - 7A RED
PIN LOAD - 85 VIOLET
PIN TRIG - 19A WHITE/RED

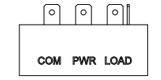

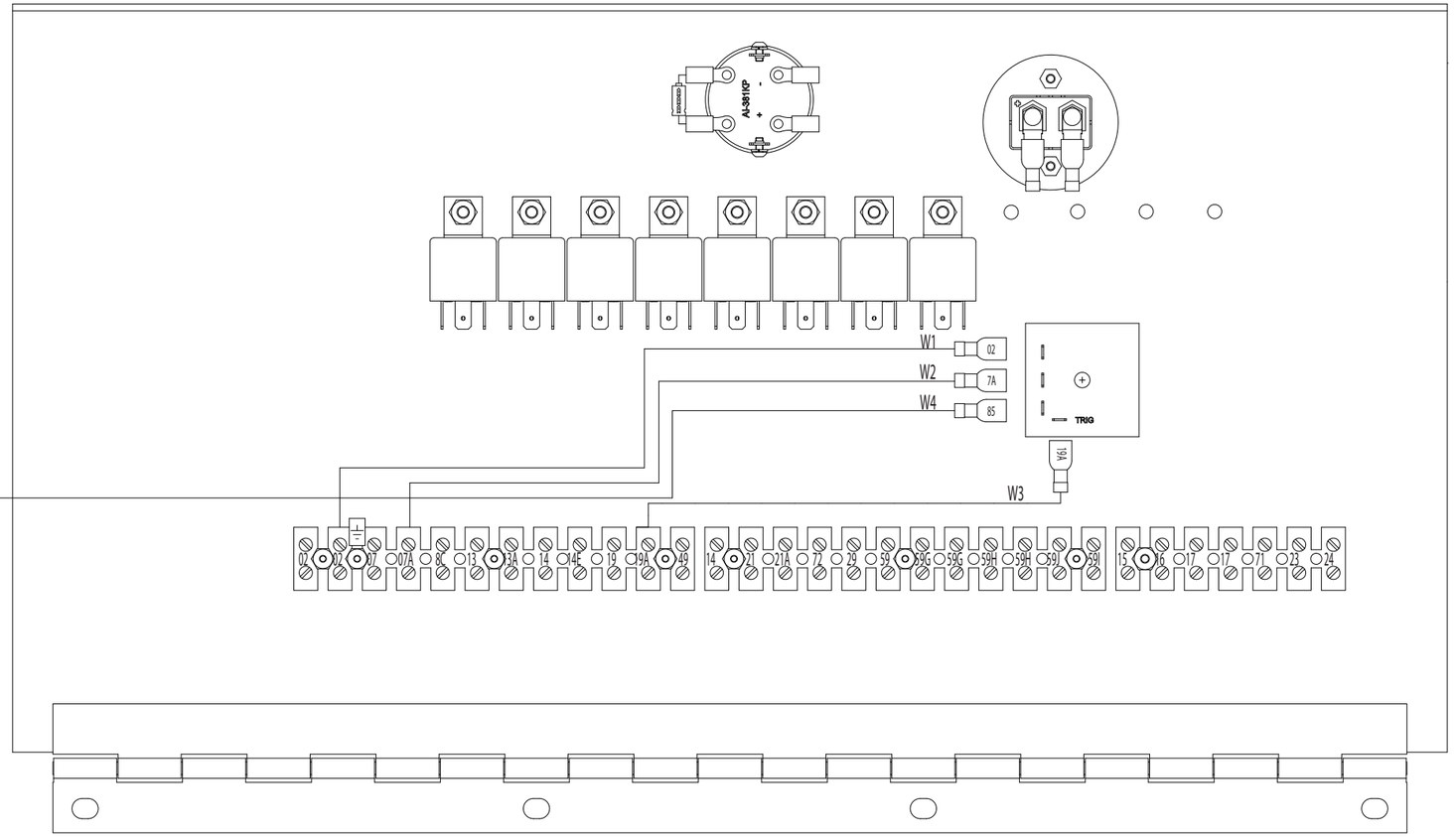

M195860AA-1

6.5 Main Manifold Harness - Motor Controller

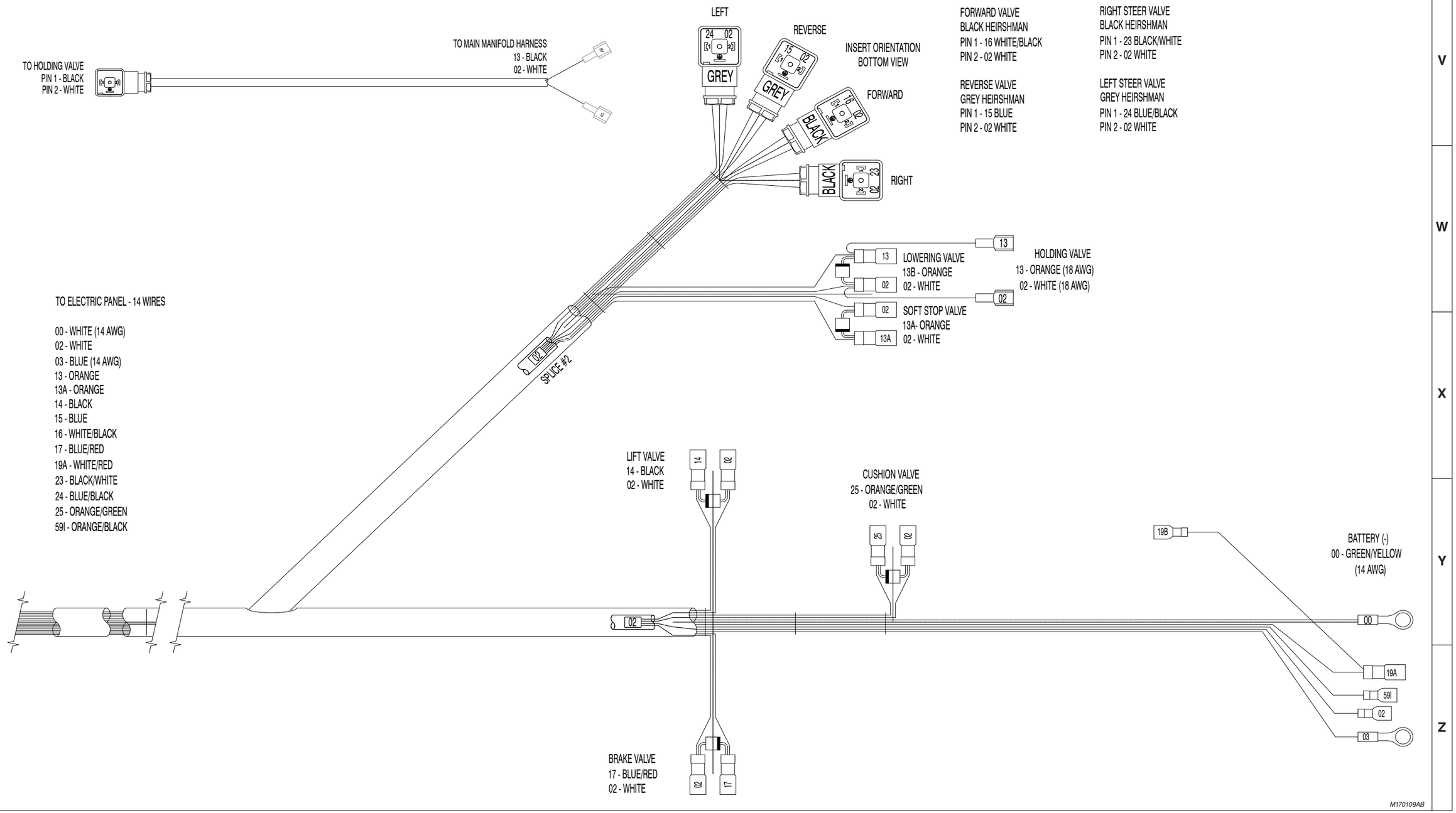

6.6 Hydraulic Schematic - Motor Controller

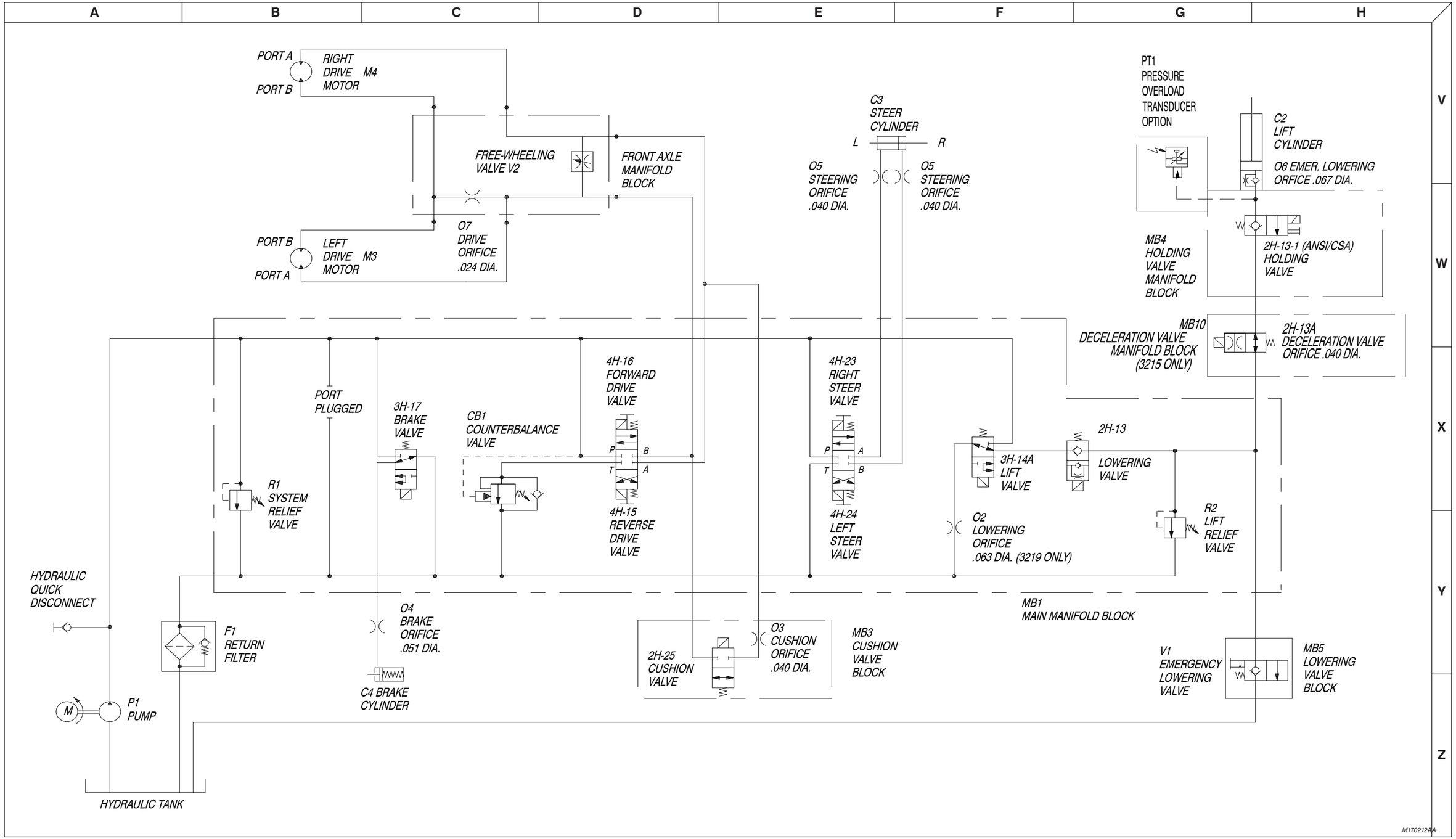

6.7a Electrical Schematic - Motor Controller

AF

A	B	C	D	E	F	G	H

Serial Breakdown Reference Chart	
Model	**Serial Number**
SJIII 3215	10001533 & below
SJIII 3219	22093185 & below

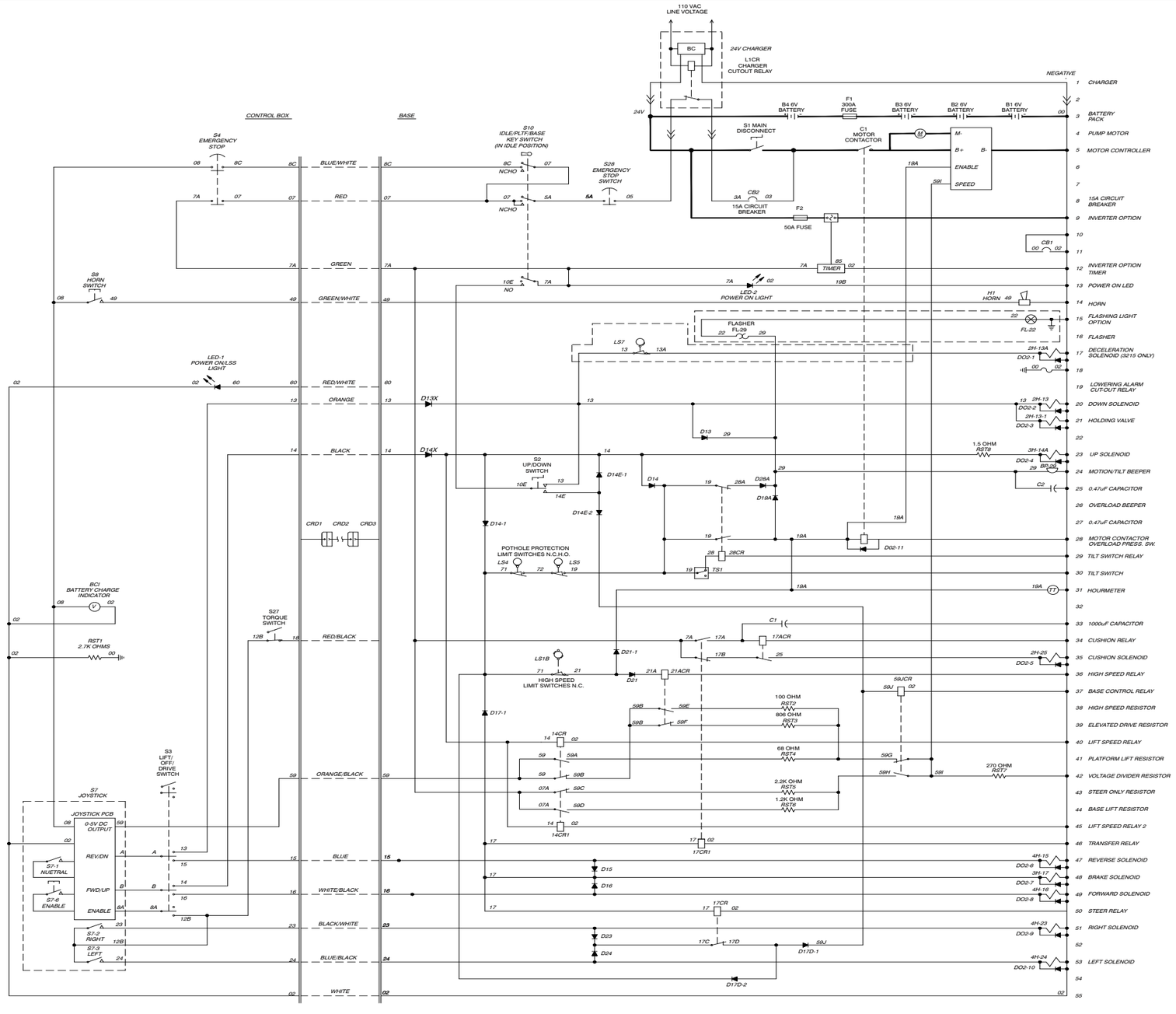

6.7b Electrical Schematic - Motor Controller

Serial Breakdown Reference Chart	
Model	**Serial Number**
SJIII 3215	10001534 & above
SJIII 3219	22093186 & above

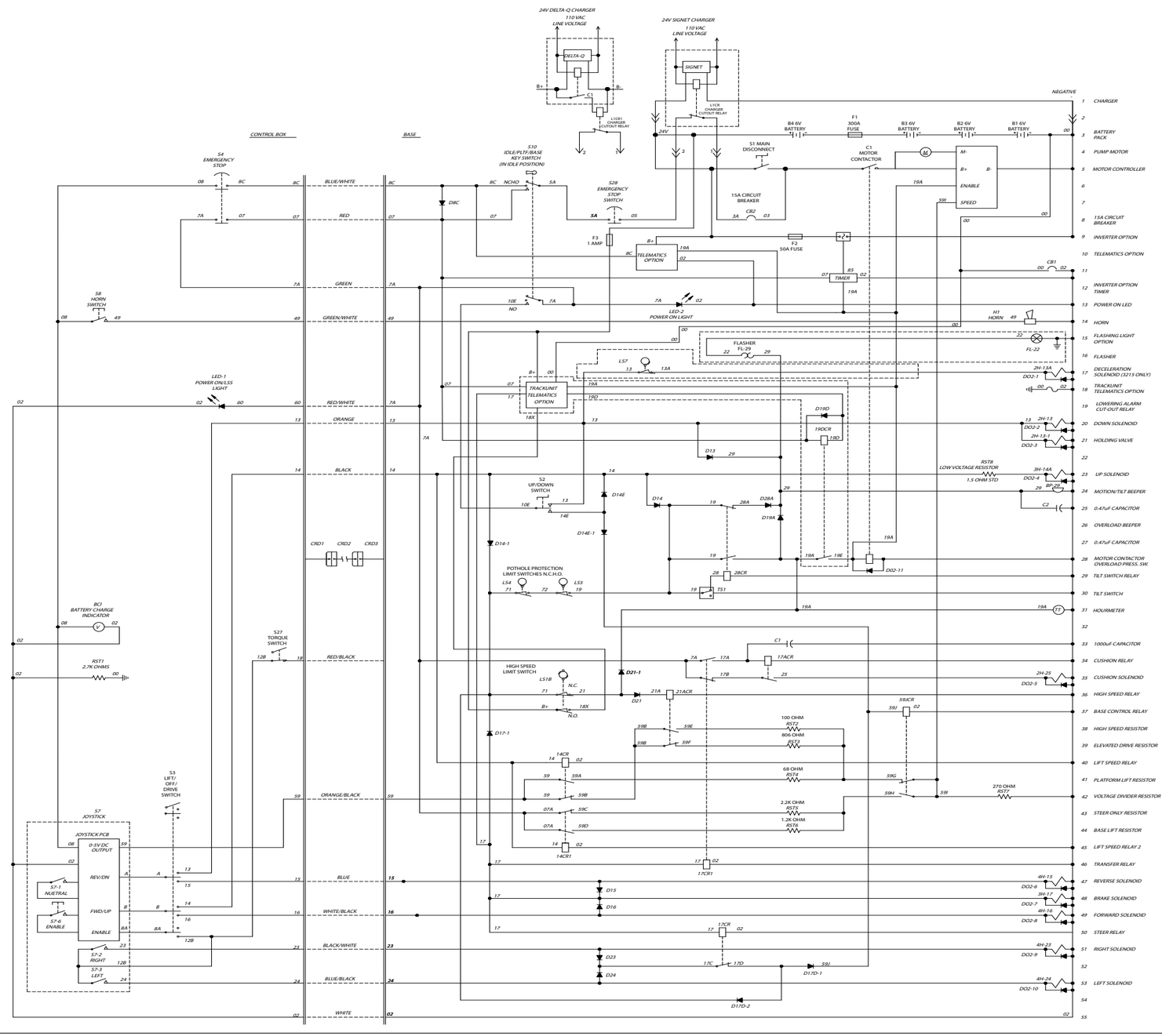

Note

A	B	C	D	E	F	G	H	
								V
								W
								X
								Y
								Z

Introduction - Troubleshooting

The following pages contain a table of Troubleshooting Information for locating and correcting most service trouble which can develop. Careful and accurate analysis of the systems listed in the table of Troubleshooting Information will localize the trouble more quickly than any other method. This manual cannot cover all possible troubles and deficiencies that may occur. If a specific trouble is not listed, isolate the major component in which the trouble occurs, isolate whether the problem is electrical or hydraulic, and then isolate and correct the specific problem.

The content of this section is separated into “probable cause” and “remedy.” The information preceded by a number represents the “probable cause.” The following line, noted by a dash represents the “remedy” to the “probable cause” directly above it. See example below for clarification.

1. Probable Cause
   - Remedy

Electrical System (Continued)

6.7-1 All Controls Inoperative

1. Battery charger plugged into external power source.
   - Disconnect charger cord.
2. Batteries disconnected.
   - Connect batteries.
3. Dirty or loose battery terminals.
   - Clean and tighten connections.
4. Battery charge low.
   - Check each cell with a hydrometer. Reading should be 1.275 (fully charged). Recharge if low reading. Replace if reading difference between cells is 0.050.
5. Main battery cables open or defective.
   - Check continuity. Replace if defective.
6. Fuse F1 defective.
   - Replace fuse.
7. Main battery disconnect switch S1 open or defective.
   - Close switch. Check continuity. Replace if defective.
8. Loose or broken wire #3 from motor contactor C1 to circuit breaker CB2.
   - Check continuity. Replace if defective.
9. Defective or tripped circuit breaker CB2.
   - Reset circuit breaker. Replace if defective.
10. Loose or broken wire #3A from circuit breaker CB2 to charger relay L1CR.
    - Check continuity. Replace if defective.
11. Defective battery charger relay L1CR.
    - Check relay. Replace if defective.
12. Loose or broken wire #5 from charger relay L1CR to base emergency stop switch S28.
    - Check continuity. Replace if defective.
13. Open or defective base emergency stop switch S28.
    - Close switch. Check switch. Replace if defective.
14. Loose or broken wire #5A from base emergency stop switch S28 to base key switch S10.
    - Check continuity. Replace if defective.
15. Open or defective base key switch S10.
    - Select function with switch. Check switch. Replace if defective.
16. Loose or broken wire #07 from base key switch S10 to base terminal block.
    - Check continuity. Replace if defective.
17. Loose or broken wire #07 from base terminal block to platform emergency stop switch S4.
    - Check continuity. Replace if defective.
18. Open or defective platform emergency stop switch S4.
    - Close switch. Replace if defective.
19. Loose or broken wire #7A from platform emergency stop switch S4 to base terminal block.
    - Check continuity. Replace if defective.
20. Loose or broken wire #7A from base terminal block to base key switch S10.
    - Check continuity. Replace if defective.
21. Open or defective base key switch S10.
    - Close switch. Replace if defective.
22. Loose or broken wire #00 from motor controller to circuit breaker CB1.
    - Check continuity. Replace if defective.
23. Defective or tripped circuit breaker CB1.
    - Reset circuit breaker. Replace if defective.
24. Loose or broken wire #02 from circuit breaker CB1 to base terminal block.
    - Check continuity. Replace if defective.

Electrical System (Continued)

6.7-2 All Controls Except for Down Function Inoperative

1. Loose or broken wire #59I from base terminal block to motor controller.
   - Check continuity. Replace if defective.
2. Loose or broken wire #19 or #02 from base terminal block to tilt switch TS1.
   - Check continuity. Replace if defective.
3. Loose or broken wire #28 from tilt switch to tilt relay 28CR.
   - Check continuity. Replace if defective.
4. Defective tilt relay 28CR.
   - Check relay. Replace if defective.
5. Loose or broken wire #19A from tilt relay 28CR to base terminal block.
   - Check continuity. Replace if defective.
6. Loose or broken wire #19A from base terminal block to motor controller.
   - Check continuity. Replace if defective.
7. Defective resistor RST7. (With joystick fully stroked)
   - Check resistor and make sure it is secure. Replace if defective.
8. Loose or broken B- cable from batteries to B- lug on motor controller.
   - Check continuity. Replace if defective.
9. Loose or broken B+ cable from main battery disconnect switch S1 to motor contactor C1.
   - Check continuity. Replace if defective.
10. Loose or broken B+ cable from motor contactor C1 to motor DCM1.
    - Check continuity. Replace if defective.
11. Loose or broken B+ cable from motor DCM1 to B+ lug on motor controller.
    - Check continuity. Replace if defective.
12. Loose or broken B- cable from motor DCM1 to M- lug on motor controller.
    - Check continuity. Replace if defective.
13. Defective motor controller.
    - Check motor controller input and output voltage. Replace if defective.
14. Defective motor DCM1.
    - Check motor for operation with 24 volt supply. Replace if defective.

6.7-3 All Controls Inoperative From Base Control Console

1. Loose or broken wire #10E from base key switch S10 to base up/down switch S2.
   - Check continuity. Replace if defective.

6.7-4 No Up Function from Base Control Console

1. Defective up/down switch S2.
   - Check switch. Replace if defective.
2. Loose or broken wire #14E from up/down switch S2 to base terminal block.
   - Check continuity. Replace if defective.
3. Open or defective diode D14E-1.
   - Check diode. Replace if defective.
4. Open or defective diode D14E-2.
   - Check diode. Replace if defective.
5. Open diode D14.
   - Check diode. Replace if defective.
6. Loose or broken wire #14 from base terminal block to relay 14CR.
   - Check continuity. Replace if defective.
7. Loose or broken wire #14 from relay 14CR to relay 14CR1.
   - Check continuity. Replace if defective.
8. Defective low voltage protection resistor RST8.
   - Check resistor and make sure it is secure. Replace if defective.

Electrical System (Continued)

9. Loose or broken wire #14A from base terminal block to up valve coil 3H-14A.
   - Check continuity. Replace if defective.
10. Loose or broken wire #02 from base terminal block to up valve coil 3H-14A.
   - Check continuity. Replace if defective.
11. Defective up valve coil 3H-14A.
   - Check continuity through coil. Replace if defective.
12. Machine not level. (Above high speed limit switch)
   - Use on level surface.
13. Loose or broken wire #59J from base terminal block to base control relay 59JCR.
   - Check continuity. Replace if defective.
14. Loose or broken wire #02 from base terminal block to base control relay 59JCR.
   - Check continuity. Replace if defective.
15. Defective base control relay 59JCR.
   - Check relay. Replace if defective.
16. Loose or broken wire #7A from base terminal block to lift speed relay 14CR1.
   - Check continuity. Replace if defective.
17. Loose or broken wire #59D from lift speed relay 14CR1 to base terminal block.
   - Check continuity. Replace if defective.
18. Defective base lift resistor RST6.
   - Check resistor and make sure it is secure. Replace if defective.
19. Loose or broken jumper wire #59H at base terminal block.
   - Check continuity. Replace if defective.
20. Loose or broken wire #59H from base terminal block to base control relay 59JCR.
   - Check continuity. Replace if defective.

6.7-5 Up Function Slow from Base Control Console

1. Loose or broken wire #14 from base terminal block to lift speed relay 14CR1.
   - Check continuity. Replace if defective.
2. Loose or broken wire #02 from base terminal block to lift speed relay 14CR1.
   - Check continuity. Replace if defective.
3. Defective lift speed relay 14CR1.
   - Check relay. Replace if defective.

6.7-6 No Down Function from Base Control Console

NOTE
Down function is not proportionally controlled.

1. Defective up/down switch S2.
   - Check switch. Replace if defective.
2. Loose or broken wire #13 from up/down switch S2 to base terminal block.
   - Check continuity. Replace if defective.
3. Loose or broken wire # 13 from base terminal block to down valve 2H-13 or holding valve 2H-13-1.
   - Check continuity. Replace if defective.
4. Defective down valve coil 2H-13.
   - Check continuity through coil. Replace if defective.
5. Defective lift cylinder holding valve coil 2H-13-1.
   - Check continuity through coil. Replace if defective.
6. Loose or broken wire #02 from holding valve coil 2H-13-1 or down valve coil 2H-13 to base terminal block.
   - Check continuity. Replace if defective.

Electrical System (Continued)

6.7-7 All Controls Inoperative From Platform Control Console

1. Loose or broken wire #8C from base key switch S10 to base terminal block.
   - Check continuity. Replace if defective.
2. Loose or broken wire #8C or wire #02 from base terminal block to platform emergency stop switch S4.
   - Check continuity. Replace if defective.
3. Open or defective platform emergency stop switch S4.
   - Close switch. Replace if defective.
4. Loose or broken wire #8 or wire #02 from emergency stop switch S4 to battery charge indicator BCI.
   - Check continuity. Replace if defective.
5. Loose or broken wire #8 or wire #02 from battery charge indicator BC1 to joystick S7.
   - Check continuity. Replace if defective.
6. Defective joystick enable switch S7-6.
   - Check switch. Replace if defective.
7. Defective joystick neutral switch S7-1.
   - Check switch. Replace if defective.
8. Defective joystick S7.
   - Check joystick. Replace if defective.

6.7-8 No Up Function from Platform Controls

1. Loose or broken wire “B” from proportional controller S7 to lift/drive switch S3.
   - Check continuity. Replace if defective.
2. Lift/Drive switch S3 defective.
   - Check switch. Replace if defective.
3. Defective PWM card on joystick S7.
   - Check joystick card. Replace if defective.
4. Loose or broken wire #14 from lift/drive switch S3 to base terminal block.
   - Check continuity. Replace if defective.
5. Open or defective diode D14.
   - Check diode. Replace if defective.
6. Loose or broken wire #14 or #02 from base terminal block to relay 14CR.
   - Check continuity. Replace if defective.
7. Loose or broken wire #59 from proportional controller S7 to base terminal block.
   - Check continuity. Replace if defective.
8. Loose or broken wire #59 from base terminal block to relay 14CR.
   - Check continuity. Replace if defective.
9. Defective lift speed relay 14CR.
   - Check relay. Replace if defective.
10. Defective low voltage protection resistor RST8.
    - Check resistor and make sure it is secure. Replace if defective.
11. Loose or broken wire #14A or #02 from base terminal block to up valve coil 3H-14A.
    - Check continuity. Replace if defective.
12. Defective up valve coil 3H-14A.
    - Check continuity through coil. Replace if defective.
13. Machine not level. (Above high speed limit switch)
    - Use on level surface.
14. Loose or broken wire #59A from lift speed relay 14CR to base terminal block.
    - Check continuity. Replace if defective.
15. Defective base lift resistor RST4.
    - Check resistor and make sure it is secure. Replace if defective.

Electrical System (Continued)

16. Loose or broken wire #59G from base terminal block to base control relay 59JCR.
    - Check continuity. Replace if defective.
17. Defective base control relay 59JCR.
    - Check relay. Replace if defective.

6.7-9 Up Function Slow from Platform Control Console

1. Loose or broken wire #14 from base terminal block to lift speed relay 14CR.
    - Check continuity. Replace if defective.
2. Loose or broken wire #02 from base terminal block to lift speed relay 14CR.
    - Check continuity. Replace if defective.
3. Defective lift speed relay 14CR.
    - Check relay. Replace if defective.

6.7-10 No Down Function from Platform Controls

1. Loose or broken wire “A” from proportional controller S7 to lift/drive switch S3.
    - Check continuity. Replace if defective.
2. Lift/Drive switch S3 defective.
    - Check switch. Replace if defective.
3. Loose or broken wire #13 from lift/drive switch S3 to base terminal block.
    - Check continuity. Replace if defective.
4. Loose or broken wire # 13 from base terminal block to down valve 2H-13 or holding valve 2H-13-1.
    - Check continuity. Replace if defective.
5. Defective down valve coil 2H-13.
    - Check continuity through coil. Replace if defective.
6. Defective lift cylinder holding valve coil 2H-13-1.
    - Check continuity through coil. Replace if defective.
7. Loose or broken wire #02 from holding valve coil 2H-13-1 or down valve coil 2H-13 to base terminal block.
    - Check continuity. Replace if defective.

6.7-11 Steer Only Inoperative

1. Loose or broken wire #8A from proportional controller S7 to lift/off/drive switch S3.
    - Check continuity. Replace if defective.
2. Lift/Off/Drive switch S3 defective.
    - Check switch. Replace if defective.
3. Loose or broken wire #12B from steer switches S7-2 and S7-3 to lift/off/drive switch S3.
    - Check continuity. Replace if defective.
4. Loose or broken wire #17C from base terminal block to relay 17CR.
    - Check continuity. Replace if defective.
5. Defective relay 17CR.
    - Check relay. Replace if defective.
6. Loose or broken wire #17D from relay 17CR to base terminal block.
    - Check continuity. Replace if defective.
7. Open diode D17D-1.
    - Check diode. Replace if defective.
8. Open diode D17D-2.
    - Check diode. Replace if defective.
9. Defective lift speed relay 14CR1.
    - Check relay. Replace if defective.
10. Loose or broken wire #59C from 14CR1 lift speed relay to base terminal block.
    - Check continuity. Replace if defective.

Electrical System (Continued)

11. Defective steer only resistor RST5.
    - Check resistor and make sure it is secure. Replace if defective.

6.7-12 Right Steer Inoperative

1. Defective right steer switch S7-2.
    - Check switch. Replace if defective.
2. Loose or broken wire #23 from right steer switch S7-2 to base terminal block.
    - Check continuity. Replace if defective.
3. Loose or broken wire #23 from base terminal block to steer right valve coil 4H-23.
    - Check continuity. Replace if defective.
4. Defective steer right valve coil 4H-23.
    - Check continuity through coil. Replace if defective.
5. Loose or broken wire #02 from steer right valve coil 4H-23 to base terminal block.
    - Check continuity. Replace if defective.
6. Open diode D23.
    - Check diode. Replace if defective.

6.7-13 Left Steer Inoperative

1. Defective left steer switch S7-3.
    - Check switch. Replace if defective.
2. Loose or broken wire #24 from right steer switch S7-3 to base terminal block.
    - Check continuity. Replace if defective.
3. Loose or broken wire #24 from base terminal block to steer left valve coil 4H-24.
    - Check continuity. Replace if defective.
4. Defective steer left valve coil 4H-24.
    - Check continuity through coil. Replace if defective.
5. Loose or broken wire #02 from steer left valve coil 4H-24 to base terminal block.
    - Check continuity. Replace if defective.
6. Open diode D24.
    - Check diode. Replace if defective.

6.7-14 Drive Only Inoperative

1. Open or defective diode D17-1.
    - Check diode. Replace if defective.
2. Loose or broken wire #59B from lift speed relay 14CR to high speed relay 21CR.
    - Check continuity. Replace if defective.
3. Defective relay 14CR.
    - Check relay. Replace if defective.

6.7-15 No Drive or Steer when Platform Fully Lowered

1. Loose or broken wire #71 from base terminal block to high speed limit switch LS1B.
    - Check continuity. Replace if defective.
2. Defective high speed switch LS1B.
    - Check switch. Replace if defective.
3. Loose or broken wire #21 from high speed limit switch LS1B to base terminal block.
    - Check continuity. Replace if defective.
4. Open or defective diode D21 or D21-1.
    - Check diode. Replace if defective.

Electrical System (Continued)

6.7-16 No Drive or Steer when Platform Elevated

1. Pothole protection bars not fully lowered.
   - Clear obstructions. Repair as needed.
2. Loose or broken wire #71 from base terminal block to pothole protection limit switch LS4.
   - Check continuity. Replace if defective.
3. Defective pothole protection limit switch LS4.
   - Check switch. Replace if defective.
4. Loose or broken wire #72 from pothole protection limit switch LS4 to base terminal block.
   - Check continuity. Replace if defective.
5. Loose or broken wire #72 from base terminal block to pothole protection limit switch LS5.
   - Check continuity. Replace if defective.
6. Defective pothole protection limit switch LS5.
   - Check switch. Replace if defective.
7. Loose or broken wire #19 from pothole protection limit switch LS5 to base terminal block.
   - Check continuity. Replace if defective.

6.7-17 Platform Drives in Slow Speed Only

1. Open or defective diode D21.
   - Check diode. Replace if defective.
2. Loose or broken wire #21A or #02 from base terminal block to high speed relay 21ACR.
   - Check continuity. Replace if defective.
3. Loose or broken wire #59E from high speed relay 21CR to base terminal block.
   - Check continuity. Replace if defective.
4. High speed relay 21ACR defective.
   - Check relay, replace if defective.
5. Defective high speed resistor RST2.
   - Check resistor and make sure it is secure. Replace if defective.

6.7-18Brake will not Release

1. Diode D16 forward or D15 reverse is shorted or open.
   - Check diode. Replace if defective.
2. Loose or broken wire #17 from base terminal block to brake valve coil 3H-17.
   - Check continuity. Replace if defective.
3. Brake valve coil 3H-17 defective.
   - Check continuity through coil. Replace if defective.
4. Loose or broken wire #02 from brake valve coil 3H-17 to base terminal block.
   - Check continuity. Replace if defective.

6.7-19 Forward Drive Function Inoperative

1. Loose or broken wire #16 from lift/drive switch S3 to base terminal block.
   - Check continuity. Replace if defective.
2. Loose or broken wire #16 from base terminal block to forward drive valve coil 4H-16.
   - Check continuity. Replace if defective.
3. Forward drive valve coil 4H-16 defective.
   - Check continuity through coil. Replace if defective.
4. Loose or broken wire #02 from forward drive valve coil 4H-16 to base terminal block.
   - Check continuity. Replace if defective.

Electrical System (Continued)

6.7-20 Reverse Drive Function Inoperative

1. Loose or broken wire #15 from lift/drive switch S3 to base terminal block.
   - Check continuity. Replace if defective.
2. Loose or broken wire #15 from base terminal block to reverse drive valve coil 4H-15.
   - Check continuity. Replace if defective.
3. Reverse drive valve coil 4H-15 defective.
   - Check continuity through coil. Replace if defective.
4. Loose or broken wire #02 from reverse drive valve coil 4H-15 to base terminal block.
   - Check continuity. Replace if defective.

Hydraulic System

6.8-1 All Function Inoperative

1. Pump P1 defective.
   - Check pump. Replace if defective.

6.8-2 All System Sluggish

1. System Relief Valve defective or not adjusted properly.
   - Adjust valve. Replace if defective.
2. Hydraulic pump P1 worn.
   - Check pump. Replace if defective.

6.8-3 Platform Drifts Down

1. Defective lift cylinder seals at the gland or holding valve manifold.
   - Replace if damaged. Note: There are no piston seals, just wear rings.
2. Combination of defective holding valve 2H-13-1 and either defective lowering valve 2H-13 or relief valve R2 or manual lowering valve V1.
   - Check valves. Replace if defective.

6.8-4 Platform Lifts Slowly

1. Open or leaking manual lowering valve V1.
   - Close valve. Replace if defective.
2. Lift relief valve R2 defective.
   - Check valve. Replace if defective.
3. Open manual override on holding valve 2H-13-1.
   - Depress and turn manual override clockwise to close. Replace if defective.

6.8-5 Platform does not Lift

1. Open manual lowering valve V1.
   - Close valve. Replace if defective.
2. Hydraulic oil level too low.
   - Fully lower the platform. Fill hydraulic tank until fluid is at or slightly above the top mark on the sight glass.
3. Platform weight excessive.
   - Reduce platform load to maximum capacity.
4. Up valve 3H-14A defective or is sticking.
   - Check valve. Replace if defective.

Hydraulic System (Continued)

6.8-6 Platform will not Lower

NOTE
Down function is not proportionally controlled.

1. Lowering valve 2H-13 defective or is sticking.
   - Clean valve. Replace if defective.
2. Defective holding valve 2H-13-1.
   - Clean valve. Replace if defective.

6.8-7 Platform Lowers Slowly (3215 only)

1. Deceleration valve 2H-13A defective or is sticking in the restricted position.
   - Check valve. Replace if defective.

6.8-8 Platform Drives Slow

1. Free-wheeling valve V2 open or defective.
   - Close valve. Replace if defective.
2. Drive motor M3 or M4 defective.
   - Check motors. Replace if defective.
3. Cushion valve 2H-25 defective or is sticking in the open position.
   - Check valve. Replace if defective.

6.8-9 Platform will not Drive in Forward or Reverse

1. Open free-wheeling valve V2.
   - Close Valve. Replace if defective.
2. Forward drive valve 4H-16 or reverse drive valve 4H-15 defective or is sticking.
   - Check Valve. Replace if defective.
3. Counterbalance valve CB1 defective or is plugged.
   - Check Valve. Replace if defective.

6.8-10 Brake(s) will not Release

1. Brake valve 3H-17 defective or is sticking.
   - Clean valve. Replace if defective.
2. Brake orifice 04 plugged.
   - Remove orifice. Clean and reinstall.
3. Brake cylinder C4 defective.
   - Rebuild cylinder. Replace if damaged.

6.8-11 Platform does not Steer

1. Right steer valve 4H-23 or left steer valve 4H-24 defective or sticking.
   - Clean valve. Replace if defective.
2. Steer cylinder C3 seals leaking.
- Rebuild cylinder(s). Replace if damaged.
3. Mechanical binding in kingpins.
- Check for binding. Repair as needed.
4. Orifices O5 plugged.
- Clean orifices, and reinstall.

General
The following information is provided to assist you in the use and application of servicing and maintenance procedures contained in this chapter.

Safety and Workmanship
Your safety, and that of others, is the first consideration when engaging in the maintenance of equipment. Always be conscious of weight. Never attempt to move heavy parts without the aid of a mechanical device. Do not allow heavy objects to rest in an unstable position. When raising a portion of the equipment, ensure that adequate support is provided.

Platform

6.9-1 OEM Controller Electronics Information

Flow Control
Single coil or solenoid for single direction. The coil has two connections; one is wired to the P.C. Board (A) terminal and the other is wired to (-), or the negative side of the supply voltage. Switches to control directional valves may be provided on the controller.

Adjustment Procedures
Adjustments are made by turning a trimpot adjustment screw. The trimpots are multi-turn, end to end-devices. It may be necessary to turn the adjustment screw several turns to observe a change in output.

Clockwise (CW) adjustment of the trimpot increases the output.

Counter-clockwise (CCW) adjustment of the trimpot decreases the output.

Adjustments affect output current, voltage or percentage of duty cycle to the coil. The minimum and maximum output is preset at the factory. However, for optimum performance, they must be adjusted while the equipment is operating.

Although the following adjustments affect the current/voltage or percentage of duty cycle, the best way to adjust the function is to observe the response or speed of the function. The following adjustments affect function response, or speed. There may be some interaction between adjustments, making it necessary to repeat the adjustment in order to achieve the desired response.

"Threshold" Adjustments
Adjusts the initial current flow or duty cycle, affecting the function response or speed when the handle is first moved from the off position. Deflect the handle slowly to the position where the controller first turns on. Adjust the threshold trimpot screw to the point where the controlled function just starts to move, then turn the trimpot screw one, full turn in the counterclockwise direction. This adjustment should be done first.

"Maxout" Adjustments
Adjusts the full stroke current or duty cycle affecting the maximum function response, or speed when the handle is deflected to its full travel. Fully deflect the handle, and adjust the maxout trimpot for maximum desired function response or speed. To obtain proportional resolution, it is important that the function starts to slow down as soon as the handle is moved back from the fully deflected position.

The ideal adjustment occurs when the function just begins to move when the handle is deflected, and the output increases until it reaches its maximum desired response or speed at the end of handle travel.

6.9-2 OEM Controller Troubleshooting

Problem

1. The function will not operate when the handle is moved. The LEDs do not light
   - A. Check that voltage is present at the positive (+)input terminal.
   - B. Check that ground is connected to the negative (-) terminal.
   - C. If there is an in-line fuse, check to see if it is good.
   - D. Check the controller on/off switch and the connectors. Voltage should be present at the (X) terminal when the controller is turned on.
   - E. Check that valve wiring is not shorted to ground. The LEDs will not light.
   - F. Check that valve wiring is not open. The LEDs will light, but the intensity will not vary.
   - G. Check trimpot settings. Fully “CCW” turns output off, “CW” turns output fully on.
2. The function jumps or lurches when turned on.
   - A. Perform “Threshold” adjustment procedures.
3. The function reaches maximum speed before the handle is fully deflected,
   - A. Perform “Maxout” adjustment procedures.
4. The function speed remains constant regardless of the degree of handle deflection.
   - A. Perform “Maxout” adjustment procedures.

IRS Option

1. Function speed reacts too slowly or too quickly in relation to handle deflection.
   - A. Check “IRS” (Ramp) trimpot adjustment. “CW” increases ramp time, “CCW” decreases ramp time.

Integrated Ramp System (IRS)

Provides smooth function response ,when reacting to an abrupt change in handle deflection. “CW” rotation of the trimpot increases ramp time and slows the response time. “CCW” decreases ramp time and increases the response time. To increase the ramp time, turn the adjusting screw “CW” a few turns, then move the controller handle abruptly. Continue to adjust until a smooth response is observed. Most controllers have on/off contacts which remove power from the P.C. Board when the handle is returned to the off position. When the handle is abruptly returned to neutral, the output will not ramp down, and the function will stop.

Ramp Thru Off

The P.C. Board should be adjusted as outlined in the IRS adjustment procedure. If the handle is abruptly returned to neutral (OFF) the output will ramp down to off. Ramp time is factory set to 2 seconds, unless otherwise specified.

NOTE

Trimpots should be sealed with nail polish or enamel based paint.

WARNING

Do not use RTV silicone.

6.9-3 OEM Controller Switch Wiring

WIRE CHART		
COLOR	**FROM**	**TO**
WHT/RED	STEER LEFT	PIN #1
WHT/GRN	STEER COMMON	PIN #2
WHT	STEER RIGHT	PIN #3
YEL	FORWARD/UP	PIN #4
RED	Vbat	PIN #5
GRY	REVERSE/DOWN	PIN #6
BLU	PROP. OUTPUT	PIN #7
BLK	GROUND (-)	PIN #8
WHT/BLU	ENABLE OUT	PIN #9

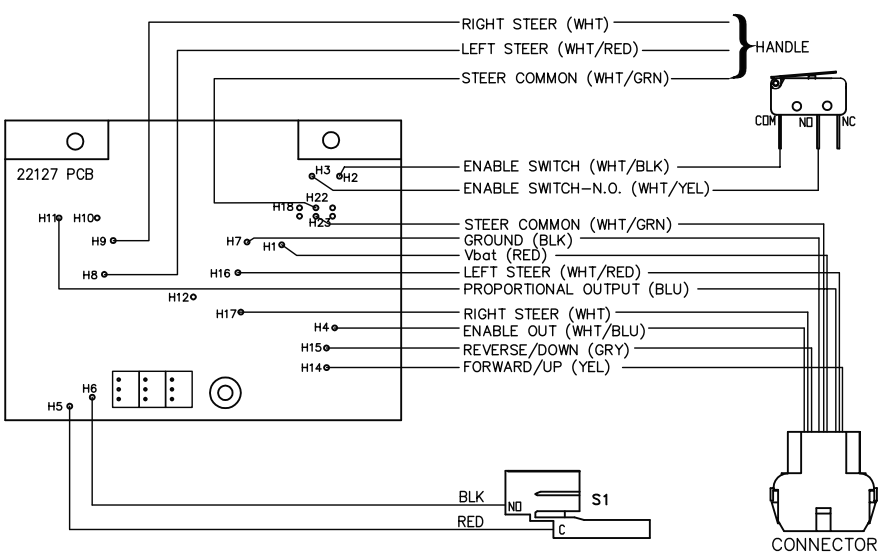

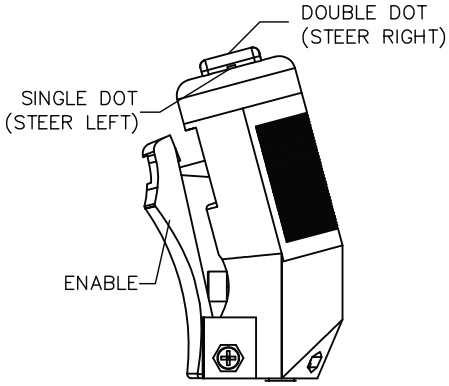

6.9-4 Gate Spring Hinge Adjustment

1. The tension of the spring hinges should be such that when the gate is opened halfway and released, it will close fully and latch.

2. To adjust the tension of the spring hinges, first remove the safety locking screw of each hinge. Retain the screws for reinstallation later.

If Locking Screw Located at the Top or Bottom of the Spring Hinge,

3. To increase the tension, insert a 5/32” hex wrench in the screw socket, and turn the wrench clockwise. To release the tension, depress the hex wrench in the socket, let it rotate counterclockwise, then release the hex wrench.

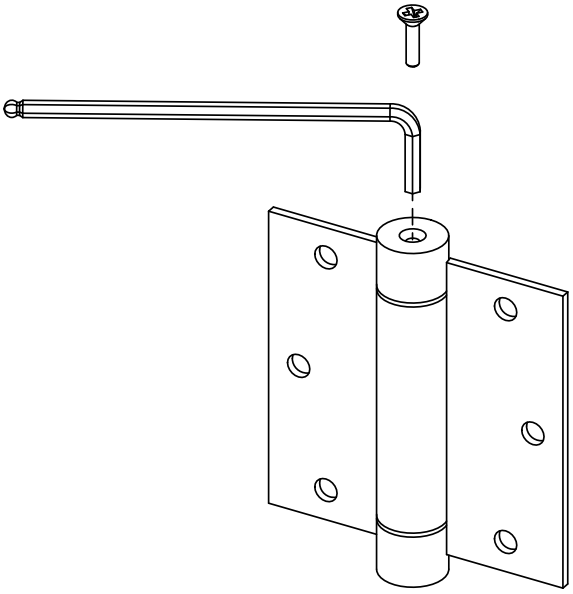

4. Adjust the tension on both hinges until the gate releases and latches from a half open position.

5. Reinstall the safety locking screws into the hinges when tension adjustment is complete.

If Locking Screw Located at the Side of the Spring Hinge,

NOTE

Adjusting the tension on the spring hinge is a two handed operation.

6. To increase the tension, insert a 5/32” hex wrench in the screw socket. Turn the wrench clockwise to desired tension as well as aligning the locking screw hole. Hold the wrench in place, maintaining the selected tension, while reinstalling the locking screw.

NOTE

Ensure the holes inside the hinges are aligned before inserting the locking screw.

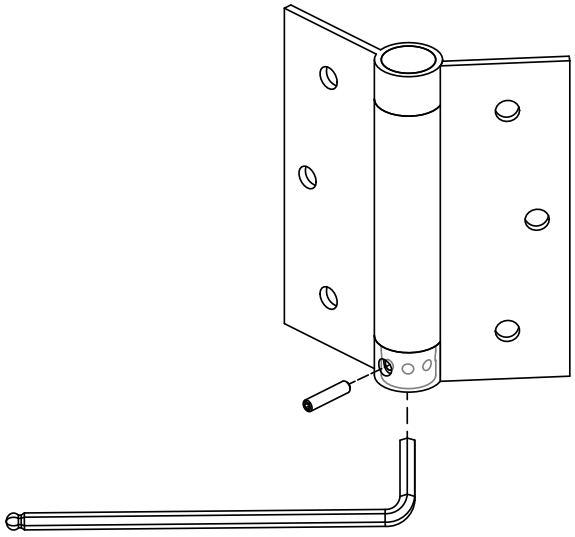

7. Adjust the tension on both hinges until the gate releases and latches from a half open position.

Base

6.9-5 System Relief Pressure Adjustment

1. Locate the system pressure fitting or quick disconnect port on the main manifold.
2. Install a calibrated 5000 psi gauge to the system pressure fitting or quick disconnect port.
3. At the main manifold, loosen the locknut on the system relief valve R1.
4. Remove black 14 wire from the lift coil.
5. Select lift with the lift/drive select switch on the platform control console.
6. Engaged lift and hold.
7. Observe reading on gauge. Adjust the R1 system relief value listed on the serial number plate. Turning the stem on the relief valve clockwise will increases pressure. Turning the stem counterclockwise will decreases pressure.
8. Release lift function and tighten the locknut.
9. Remove the gauge from system pressure test port.

6.9-6 Lift Pressure Adjustment

NOTE

Adequate area to raise the platform to full height is required for the following steps.

1. Locate the lift pressure test port on the main manifold.
2. Install a calibrated 3000 psi gauge to the lift pressure quick disconnect port.
3. At the main manifold, loosen the locknut on the lift relief valve R2.
4. Close the manual lowering valve. Use the lift switch at the base control console to raise the platform to full height and hold the lift up switch on.
5. Observe the reading on the gauge. Adjust the R2 relief valve to the value listed on the serial number plate. Turning the stem of the relief valve clockwise will increases pressure. Turning the stem counterclockwise will decreases pressure.
6. Remove the gauge from lift pressure test port.

NOTE

Pressure setting may vary as aerial platform components wear. The lift pressure should be set for rated load only.

6.9-7 Resistor - Voltage Divider

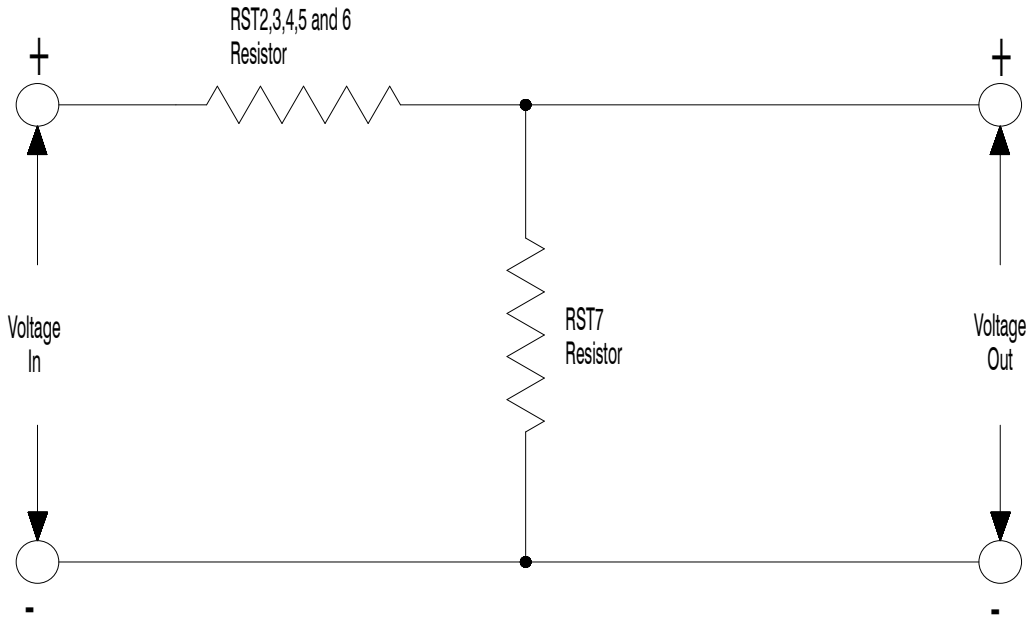

Common Resistor	Resistor	Ohm	Function	Input Voltage*	Output Voltage**
RST7 270 Ohm	RST4	68	Platform lift resistor	4.8	3.8
	RST2	100	Hi speed drive resistor	4.8	3.4
	RST3	806	Elevated drive resistor	4.8	1.1
	RST5	2.2K	Steer only resistor	24	2.4
	RST6	1.2K	Base lift resistor	24	4.1

*** 4.8 volts refers to full stroke on the joystick. 24 volts represents a full charge on the battery pack.**

**** Values given are with all connections tight and free from corrosion + or - 10%.**



www.skyjack.com